3.11 Hazards and Hazardous Materials

This section describes hazardous materials and other public health and safety issues associated with the Project and summarizes the pertinent federal, state, and local agency laws, regulations, and programs related to these issues. Public safety concerns discussed below include potential exposure to landfill gas, fire hazards, hazardous materials, emergency response and evacuation plans, and aviation hazards. A glossary of landfill terms is provided in the Table of Contents.

Issues identified in response to the Notices of Preparation (NOPs) (Appendix 1) were considered in preparing this analysis. Hazards issues that were identified in the NOP pertain to the following: (1) protecting the landfill's cover and liner to prevent the generation and movement of landfill leachate[1] away from the existing waste unit; (2) assessing the feasibility of operating, maintaining, and monitoring the landfill gas collection system and building a landfill gas protection system including methane alarm sensors; (3) assessing vapor intrusion, leachate, methane explosion, and subsurface fire risks to future site occupants; (4) assessing hazardous dust and gas risks to nearby residents during construction; and (5) ensuring regulatory review of all proposed land use developments.

Existing Conditions

Regulatory Setting

As used in this section, "hazardous materials" are defined as any material that, because of its quantity, concentration, or physical or chemical characteristics, poses a significant present or potential hazard to human health and safety or to the environment if released into the workplace or the environment.[2] The proper management of hazardous materials is a common concern for all communities. Beginning in the 1970s, governments at the federal, state, and local levels became increasingly concerned about the effects of hazardous materials on human health and the environment. Numerous laws and regulations were developed to investigate and mitigate these effects. As a result, the storage, use, generation, transport, and disposal of hazardous materials are highly regulated by federal, state, and local agencies. These agencies and information about the laws, regulations, and programs they administer are summarized below.

Federal and State

Hazardous Materials Management

The U.S. Environmental Protection Agency (EPA) is the lead agency responsible for enforcing federal laws and regulations governing hazardous materials that affect public health or the environment. The major federal laws and regulations enforced by the EPA that could relate to the management of hazardous materials on the Project site include: the Resource Conservation and Recovery Act (RCRA), the Toxic Substances Control Act (TSCA), and the Hazardous Material Transportation Act (HMTA).

In 1976, RCRA was enacted to provide a general framework for the EPA to regulate hazardous waste from the time it is generated until its ultimate disposal. In accordance with RCRA, facilities that generate,

[1] Leachate is the liquid that drains from a landfill and which could potentially contain hazardous materials.
[2] California Health and Safety Code, Section 25501.

treat, store, or dispose of hazardous waste are required to ensure that the wastes are properly managed from "cradle to grave" by complying with the federal waste manifest system.

In 1976, TSCA was enacted to provide the EPA authority to regulate the production, importation, use, and disposal of chemicals that pose a risk of adversely impacting public health and the environment. TSCA and subsequent amendments regulate contaminants such as polychlorinated biphenyls (PCBs), asbestos-containing materials (ACMs), and lead-based paint (LBP). TSCA also gives the EPA authority to regulate the cleanup of sites contaminated with specific chemicals, such as PCBs.

In 1990 and 1994, the HMTA was amended to improve the protection of life, property, and the environment from the inherent risks of transporting hazardous material in all major modes of commerce. The U.S. Department of Transportation (USDOT) developed hazardous materials regulations, which govern the classification, packaging, communication, transportation, and handling of hazardous materials, as well as employee training and incident reporting.[3] The transportation of hazardous materials is subject to both RCRA and USDOT regulations.

In California, the EPA has granted most enforcement authority of federal hazardous materials regulations to the California Environmental Protection Agency (Cal/EPA). Under the authority of Cal/EPA, the State Water Resources Control Board (SWRCB) and Department for Toxic Substances Control (DTSC) are responsible for overseeing the remediation of contaminated soil and groundwater sites. The provisions of Government Code 65962.5 (also known as the Cortese List) require the SWRCB, DTSC, the California Department of Health Services, and the California Department of Resources Recycling and Recovery (CalRecycle) to submit information pertaining to sites associated with solid waste disposal, hazardous waste disposal, and/or hazardous materials releases to Cal/EPA.

California Code of Regulations, Title 27 – Solid Waste Facility Management

Under the requirements of Title 27 of the California Code of Regulations (CCR), operators of Class II and Class III municipal solid waste facilities are required to monitor and maintain the facility once it is closed to protect against hazards that could result from the decomposition and settlement of the buried refuse, such as the generation of methane, which is a potentially explosive gas, and the potential release into the environment of other hazardous constituents. The primary agency overseeing the closure and post-closure operations of landfills in Santa Clara County is the Santa Clara County Department of Environmental Health Local Enforcement Agency (LEA), but the San Francisco Bay Regional Water Quality Control Board (Regional Water Board), CalRecycle, and the Bay Area Air Quality Management District (BAAQMD) also have jurisdiction over certain landfill-related issues. The requirements for management and roles of these agencies are described below under the Local subheading.

Hazardous Materials Transportation

The California Highway Patrol, the California Department of Transportation (Caltrans), and DTSC are responsible for enforcing federal and state regulations pertaining to the transportation of hazardous materials. If a discharge or spill of hazardous materials occurs during transportation, the transporter is required to take appropriate immediate action to protect human health and the environment (e.g., notify local authorities and contain the spill), and is responsible for the discharge cleanup.[4]

---

[3] Code of Federal Regulation, Title 49, Transportation, Parts 171–180.

[4] California Code of Regulations, Title 22, Social Security, Section 66260.10 et seq.

Worker Health and Safety

The Occupational Health and Safety Administration (OSHA) is the federal agency responsible for enforcement and implementation of federal laws and regulations pertaining to worker health and safety. Under OSHA jurisdiction, the Hazardous Waste Operations and Emergency Response regulations require training and medical supervision for workers at hazardous waste sites.[5] Additional regulations have been developed for construction workers regarding exposure to lead[6] and asbestos[7] during construction.

State worker health and safety regulations related to construction activities are enforced by the California Division of Occupational Safety and Health (Cal/OSHA). Regulations include requirements for protective clothing, training, and limits on exposure to hazardous materials. Cal/OSHA also enforces occupational health and safety regulations specific to lead and asbestos investigations and abatement, which equal or exceed their federal counterparts.[8]

Airport Land-Use Compatibility

Development near airports can pose a potential hazard to people and property on the ground, as well as create obstructions and other hazards to flight. The Santa Clara County Airport Land Use Commission (ALUC) has adopted Comprehensive Land Use Plans (CLUPs) for areas surrounding public-use airports within the County. The CLUPs generally apply regulations and policies promulgated by the Federal Aviation Administration (FAA) to protect the safety and compatibility of aircraft operations.

The Federal Aviation Regulations (FAR) Part 77, *Objects Affecting Navigable Airspace*, sets forth standards and review requirements for protecting navigable airspace near airports by restricting the height of potential structures and minimizing other potential hazards (e.g., reflective surfaces, flashing lights, and electronic interference) to aircraft approaching or departing an airport. FAR Part 77 includes criteria that define sloped imaginary surfaces extending several miles from the airport runways that are used to identify structures that could obstruct air navigation.

The FAA requires notification of proposed construction or alteration projects that would penetrate the imaginary surfaces defined by FAR Part 77 or projects that would stand 200 feet or more at least 30 days prior to beginning construction (FAA Form 7460-1). Following notification of proposed construction or alteration, the FAA may conduct an aeronautical study to determine if proposed structures and construction equipment would create an airspace hazard. The FAA commonly requires proposed structures and construction equipment affecting navigable airspace to be marked and/or lighted for increased visibility.[9] As the FAA does not have authority to approve or disapprove a proposed off-airport land use, the City of Santa Clara coordinates with City of San José to ensure that proposed developments near the Norman Y. Mineta San José International Airport comply with the FAR Part 77 notification requirements and the FAA's aeronautical determinations. Compliance measures may include

---

[5] Code of Federal Regulations, Title 29, Labor, Section 1910.120, Hazardous Waste Operations and Emergency Response.
[6] Code of Federal Regulations, Title 29, Labor, Section 1926.62, Lead.
[7] Code of Federal Regulations, Title 29, Labor, Section 1926.1101, Asbestos.
[8] California Code of Regulations, Title 8, Industrial Relations, Sections 1529, Asbestos; 1532.1 Lead; and 5192, Hazardous Waste Operations and Emergency Response.
[9] Federal Aviation Administration, U.S. Department of Transportation. 2007. *Obstruction Marking and Lighting*. 1 February.

coordination with a property owner to grant an avigation easement[10] to the City of San José to establish elevation limits over the Project property and protect the navigable airspace for the airport.

Wildland Fire Protection

In accordance with California Public Resource Code Sections 4201–4204 and Government Code Sections 51175–51189, the California Department of Forestry and Fire Protection (CAL FIRE) has mapped areas of significant fire hazards based on fuels, terrain, weather, and other relevant factors. These zones, referred to as Fire Hazard Severity Zones (FHSZ), represent the risks associated with wildland fires. Fire Hazard Severity Zones mapped by CAL FIRE for State and local responsibility areas are classified as either "medium," "high," or "very high" based on fire hazards; however, the law requires only identification of Very High Fire Hazard Severity Zones in local responsibility areas. Wildland-Urban Interface Areas designated by local agencies are also classified as FHSZ.

Local

Landfill Closure, Monitoring, and Maintenance

The primary agency responsible for implementing CCR, Title 27 requirements for post-closure landfill management in Santa Clara County is the LEA, but the Regional Water Board, CalRecycle, and BAAQMD also have jurisdiction over aspects of post-closure management. The CCR, Title 27 requirements apply to all permitted solid waste landfills operating on or after January 1, 1988. The technical documents required to assess future land uses on closed solid waste landfills are described below.

Closure and Post-Closure Maintenance Plans

The owner and operator of the landfill (the City of Santa Clara) has developed and implemented a Closure Plan and Post-Closure Maintenance Plan (PCMP) to ensure the landfill was closed in a manner that protects human health and the environment and that adequate resources are available to properly maintain the landfill post-closure. The requirements for these plans are described in 27 CCR 21790–21840. The final Closure Plan and PCMP for all parcels[11] was approved in December 1992 and amended multiple times, most recently in December 2013.[12] The modifications the Project would make to the landfill would require approval of an amended Closure Plan and PCMP by the LEA, CalRecycle, and Regional Water Board.

The primary goal of landfill closure is to design a final cover that will minimize the infiltration of water into the waste and thereby minimize the production of leachate and emission of landfill gas. The final cover design includes a low-permeability layer and erosion control measures. In accordance with 27 CCR 21800, the final Closure Plan describes the cost, schedule, and approach for closing the landfill. The final Closure Plan t also includes, but is not limited to, a description of the following:

- Proposed post-closure land uses pursuant to 27 CCR 21190 (27 CCR 21790(b)(5));
- Final cover and grading design pursuant to 27 CCR 21140 and 21142 (27 CCR 21790(b)(8)(B));

[10] An avigation easement is a property right acquired from a land owner for the use of airspace above a specified height. Avigation easements grant the right to unobstructed airspace and the right of entry upon the land to exercise those rights.

[11] Emcon. 1992. *Final Closure and Postclosure Maintenance Plan, City of Santa Clara, All Purpose Sanitary Landfill, Revision 2. 2*. December.

[12] Golder Associates. 2013. *Postclosure Maintenance Plan Update, City of Santa Clara, All Purpose Landfill, SWIS No. 43-AO-0001, Waste Discharge Requirements Order, No. R2-2002-0008*. 23 August.

- Drainage and erosion control systems pursuant to 27 CCR 21150 (27 CCR 21790(b)(8)(D));
- Landfill gas monitoring and control systems pursuant to 27 CCR 20920-20939 (27 CCR 21790(b)(8)(E)); and
- Leachate monitoring and control measures pursuant to 27 CCR 21160 (27 CCR 21790(b)(8)(F)).

In accordance with 27 CCR 21830, the final PCMP provides an accurate detailed annualized cost estimate for the inspection, maintenance, and monitoring of the landfill during the post-closure period to maintain the integrity of containment features. The PCMP must include, but is not limited to, a description of the following:

- Proposed post-closure land uses pursuant to 27 CCR 21190 (27 CCR 21830(b)(3));
- An emergency response plan pursuant to 27 CCR 21130 (27 CCR 21830(b)(1));
- Current monitoring and control systems, including a detailed description of any proposed changes to be implemented as part of closure (27 CCR 21830(b)(4));
- The methods, procedures, and processes that will be used to maintain, monitor and inspect the closed landfill during the post-closure maintenance period to comply with 27 CCR 21180 (27 CCR 21830(b)(5));
- An operations and maintenance plan for the gas control system (27 CCR 21830(b)(6)); and
- A summary of the requirements for reporting the results of monitoring and collection pursuant to section 21180 (27 CCR 21830(b)(7)).

Post-Closure Land Use Plan

As described above, the Closure Plan and PCMP describe proposed post-closure land uses that meet the requirements contained in 27 CCR 21190. If the post-closure land use is proposed to significantly change after approval of the final Closure Plan and PCMP, then a Post-Closure Land Use Plan (PCLUP) must be prepared and submitted to the LEA, Regional Water Board, and BAAQMD for review. Post-closure land uses must be designed and maintained to protect public health (e.g., prevent landfill gas explosions and prevent public contact with waste, landfill gas, and leachate) and prevent damage to structures, roads, utilities, and gas monitoring and control systems (27 CCR 21190(a)).

Development of the site must maintain the integrity of the final cover (and provide for protective measures during temporary disruption of the cover during construction), drainage and erosion control systems, and gas monitoring and control systems (27 CCR 21190(d)). Construction of structural improvements on top of landfilled areas during the post-closure period must meet the following conditions:

- Automatic methane gas sensors, designed to trigger an audible alarm when methane concentrations are detected, shall be installed in all buildings (27 CCR 21190(e)(1));
- Enclosed basement construction is prohibited (27 CCR 21190(e)(2));
- Buildings shall be constructed to mitigate the effects of gas accumulation, which may include an active gas collection or passive vent systems (27 CCR 21190(e)(3));
- Buildings and utilities shall be constructed to mitigate the effects of differential settlement. All utility connections shall be designed with flexible connections and utility collars (27 CCR 21190(e)(4));

- Utilities shall not be installed in or below any low permeability layer of final cover (27 CCR 21190(e)(5));
- Pilings shall not be installed in or through any bottom liner unless approved by the Regional Water Board (27 CCR 21190(e)(6));
- If pilings are installed in or through the low permeability layer of the final cover, then the low permeability layer must be replaced or repaired (27 CCR 21190(e)(7)); and
- Periodic methane gas monitoring shall be conducted inside all buildings and underground utilities in accordance with 27 CCR 20933 (27 CCR 21190(e)(8)).

Additional soil layers or building pads placed on the final cover may be required prior to construction to protect the integrity and function of the various layers of the final cover (27 CCR 21190(f)). To prevent gas migration into buildings, all construction on the Landfill shall be designed and constructed in accordance with the following or in accordance with an equivalent design, unless an exemption has been issued:

- A geomembrane or equivalent system with low permeability to landfill gas shall be installed between the concrete floor slab of the building and subgrade (27 CCR 21190(g)(1));
- A permeable layer of open graded material of clean aggregate with a minimum thickness of 12 inches shall be installed between the geomembrane and the subgrade or slab (27 CCR 21190(g)(2));
- A geotextile filter shall be utilized to prevent the introduction of fine sediment into the permeable layer (27 CCR 21190(g)(3));
- Perforated venting pipes shall be installed within the permeable layer, and shall be designed to operate without clogging (27 CCR 21190(g)(4));
- The venting pipe shall be constructed with the ability to be connected to an induced draft exhaust system (27 CCR 21190(g)(5));
- Automatic methane gas sensors shall be installed within the permeable gas layer, and inside the building to trigger an audible alarm when methane gas concentrations are detected (27 CCR 21190(g)(6)); and
- Periodic methane gas monitoring shall be conducted inside all buildings and underground utilities in accordance with applicable regulations in 27 CCR 20920-20939 (27 CCR 21190(g)(7)).

Corrective Action Plan

In accordance with 27 CCR 22102, a Corrective Action Plan (CAP) must be prepared, which evaluates known or reasonably foreseeable non-water release corrective action that may be needed as a result of known or reasonably foreseeable causal events.[13] Causal events include, but are not limited to, earthquakes, flooding, tsunami, seiche, fire, precipitation, and degradation of or otherwise inadequate containment structure or environmental monitoring or control system. The evaluation of causal events must include a cost estimate for each corrective action. The CAP must also evaluate the long-term performance of the final cover system to ensure that it will continue to meet the requirements of 27 CCR 21140 without the need for corrective action. The CAP must be submitted to and approved by the LEA, Regional Water Board, and CalRecycle pursuant to the schedule in 27 CCR 21860.

[13] "Causal event" means an occurrence that could result in a non-water release corrective action.

Waste Discharge Requirements

Semi-annual groundwater, leachate, and surface water monitoring at the Landfill is performed in accordance with the Waste Discharge Requirements (WDR) Order No. R2-2002-0008 issued by the Regional Water Board. There are currently 19 active groundwater monitoring wells, three groundwater piezometers, four surface water monitoring locations, and one leachate discharge sampling location within the monitoring network. The samples are routinely analyzed for the primary contaminants of concern at the Landfill, but once every five years a more comprehensive suite of contaminants that includes all potential contaminants of concern associated with a landfill are analyzed.[14] The WDR for the Landfill requires Regional Water Board approval of a change in post-closure land use; the mechanism for that approval would be an issuance of a revised WDR.

City of Santa Clara 2010–2035 General Plan

The following safety goals and policies within the Environmental Quality section of the general plan are relevant to the Project.

Policy 5.10.2-P3: Encourage implementation of technological advances that minimize public health hazards and reduce the generation of air pollutants.

Goal 5.10.5-G1: Protection of life, the environment and property from natural catastrophes and man-made hazards.

Goal 5.10.5-G2: Adequate emergency preparedness plans.

Policy 5.10.5-P22: Regulate development on sites with known or suspected contamination of soil and/or groundwater to ensure that construction workers, the public, future occupants and the environment are adequately protected from hazards associated with contamination, in accordance with applicable regulations.

Policy 5.10.5-P23: Require appropriate clean up and remediation of contaminated sites.

Policy 5.10.5-P24: Protect City residents from the risks inherent in the transport, distribution, use and storage of hazardous materials.

Policy 5.10.5-P25: Use Best Management Practices to control the transport of hazardous substances and to identify appropriate haul routes to minimize community exposure to potential hazards.

Policy 5.10.5-P26: Survey pre-1980 buildings and abate any lead-based paint and asbestos prior to structural renovation and demolition, in compliance with all applicable regulations.

Policy 5.10.5-P29: Continue to refer proposed projects located within the Airport Influence Area to the Airport Land Use Commission.

Policy 5.10.5-P30: Review the location and design of development within Airport Land Use Commission jurisdiction for compatibility with the Airport Land Use Compatibility Plan.

Policy 5.10.5-P32: Encourage all new projects within the Airport Influence Area to dedicate an avigation easement.

[14] Golder Associates Inc. 2014. *City of Santa Clara All-Purpose Landfill, First Semiannual 2014 Self-Monitoring Program Report*. July.

Policy 5.10.5-P33: Limit the height of structures in accordance with the Federal Aviation Administration Federal Aviation Regulations, FAR Part 77 criteria.

Hazardous and Acutely Hazardous Emissions

BAAQMD oversees the protection of air quality in the San Francisco Air Basin, which includes the Project site. Hazardous and acutely hazardous emissions during construction (e.g., demolition of buildings containing asbestos) and facility operations (e.g., petroleum vapors from gas stations) are subject to health risk assessment regulations and permitted conditions of operation to protect nearby sensitive receptors.

Hazardous Materials Permitting

In California, hazardous waste and material handling and storage are regulated under the Unified Program, which ensures consistency throughout the State with regard to administrative requirements, permits, inspections, and enforcement. The California Environmental Protection Agency oversees the program as a whole, and certifies 83 local government agencies known as Certified Unified Program Agencies (CUPA) to implement the hazardous waste and materials standards set by five different State agencies.

The City of Santa Clara Fire Department (SCFD) is the CUPA that oversees the implementation and enforcement of permitting requirements for the routine management of hazardous materials in the City of Santa Clara. Most of the hazardous materials programs in the City are administered by SCFD under the Unified Program. As established by Cal/EPA, the Unified Program consolidates, coordinates, and makes consistent the administrative requirements, permits, inspections, and enforcement activities for the following six environmental and emergency response programs:

- Hazardous Waste Generator Program (H&SC Chapter 6.5)
- Hazardous Waste Tiered Permitting (H&SC Chapter 6.5)
- Underground Storage Tank (H&SC Chapter 6.7)
- Aboveground Storage Tank SPCC Plan (H&SC Chapter 6.67)
- Hazardous Materials Business Plan (H&SC Chapter 6.95)
- California Accidental Release Prevention Program (H&SC Chapter 6.95)

The purpose of the Unified Program is to ensure that facilities properly manage and disclose hazardous materials used to minimize the risk of a hazardous materials release and improve emergency response actions in the event of a release. In addition to the Unified Program, the SCFD administers additional hazardous materials permitting requirements in accordance with the Santa Clara County Hazardous Materials Storage Ordinance (1983) and Toxic Gas Ordinance (1989),[15] which have been incorporated into the Uniform Fire Code adopted by the City.

Emergency Response

The City of Santa Clara participated in the Association of Bay Area Government's (ABAG's) development of the Santa Clara County Local Hazard Mitigation Plan, which focuses on the assessment and mitigation of risks associated with large natural and man-made disasters (e.g., hazardous materials spills and

[15] Santa Clara County Ordinance Code, Division B11, Chapters XIII–XIV.

wildfire).[16] It is the mission of the SCFD to protect all citizens within the City of Santa Clara from injury and loss due to natural and man-made disasters. Within the SCFD, the Santa Clara Hazardous Materials Division responds to emergencies related to hazardous materials within the City. The City's Emergency Operations Plan describes the City's responsible agencies and planned responses for emergency situations associated with large natural and man-made disasters.

Environmental Setting

Project Site

The Project site is located on the 210-acre former Santa Clara All-Purpose Landfill, which has an actual waste footprint of approximately 183 acres (Figure 3.11-1). Based on a review of historical aerial photographs and topographic maps, observable landfill operations appear to have begun in the late 1960s, beginning in Parcel 4.[17] Over time, waste burning operations ceased on Parcel 4 and disposal operations expanded to the other parcels until the Landfill closed in 1993. Parcels 1 through 4 reportedly accepted construction debris and/or non-hazardous residential, commercial, industrial, and municipal wastes. No waste was placed on Parcel 5 or the Retention Basin. Around 1985 the Santa Clara Golf and Tennis Club, clubhouse, and restaurant were constructed. At that time, waste beneath the portion of Parcel 4 currently used for tennis courts was removed and replaced with clean fill.[18] The Landfill received a final landfill closure certification in September 1994.[19] The depth of refuse at the Landfill Parcels 1 through 4 ranges from approximately 10 to 60 feet. A clay cap varying in thickness from 1 to 7 feet throughout the Landfill covers the refuse. The cap is covered with 1 to 34 feet of artificial fill (i.e., cover soil) consisting of mixed sands, gravels, and silts.[20]

A generalized schematic cross-section showing the existing layers of materials at the site is shown in Figure 3.9-1 in Section 3.9, *Geology and Soils*. Geologic mapping indicates that the refuse and fill materials on the Project site overlie Holocene alluvium consisting of Bay Mud, basin, and levee deposits, as well as deeper Pleistocene alluvial deposits.[21]

Soil Quality

In March and October 2014, soil investigations were performed on Parcels 1 through 4 as part of a *Site Investigation and Environmental Risk Assessment* requested by the Regional Water Board.[22] The purpose of the investigations was to evaluate the environmental quality of soil in the artificial fill, cap, refuse, and underlying alluvium at the Project site and to assess potential health risks to future receptors from exposure to contaminants. Soil samples were collected from 38 borings ranging in depth from 5 to 200 feet below the existing ground surface and analyzed for one or more of the following: total petroleum hydrocarbons as gasoline (TPHg), diesel (TPHd), and motor oil (TPHmo), volatile organic compounds (VOCs), semi-volatile organic compounds (SVOCs), polychlorinated biphenyls (PCBs),

---

[16] City of Santa Clara. 2011. *2011 Local Hazard Mitigation Plan Annex.* 28 March.

[17] Langan Treadwell Rollo. 2015a. *Site Investigation and Environmental Risk Assessment, City Place Santa Clara, Santa Clara, California*. Langan Project No. 770611601. September.

[18] Cornerstone Earth Group. 2014. *Draft Phase I Environmental Site Assessment and Preliminary Soil and Soil Vapor Quality Evaluation, Centennial Gateway, Tasman Drive and Centennial Boulevard, Santa Clara, California*. 23 April.

[19] Golder Associates Inc. 2014. *Op. cit*.

[20] Langan Treadwell Rollo. 2015a. *Op. cit.*

[21] Wentworth, C.M., M.C. Blake, Jr., R.J. McLaughlin, and R.W. Graymer. 1999. *Preliminary Geologic Description of the San José 30 x 60 Minute Quadrangle. California*. A Digital Database: U.S. Geological Survey Open File Report 98-795.

[22] Langan Treadwell Rollo. 2015a. *Op. cit.*

Sources: Langan Treadwell Rollo 2014, Langan Treadwell Rollo 2015, RTKL 2015.

Graphics ... 00333.14 (5-20-2015) tm

Figure 3.11-1
Existing Landfill Features
City Place Santa Clara

metals, and asbestos. Concentrations of TPHg, TPHd, TPHmo, and select VOCs and metals were reported above the Regional Water Board's residential, commercial/industrial, and/or construction worker Environmental Screening Levels (ESLs)[23] in the cover soils, cap, and/or refuse at the Project site.

In 2012, a separate soil investigation was conducted on Parcel 5 and the tennis courts located in the southwest portion of Parcel 4, which are not underlain by refuse. Soil samples were collected from nine exploratory borings at depths up to 10 feet below ground surface (bgs). Several polynuclear aromatic compounds (PAHs, a class of SVOCs) were detected in the soil samples. Concentrations of the PAH benzo(a)pyrene were reported in three of 23 soil samples above the residential ESL, but below the commercial/industrial ESL.

Low concentrations of organochlorine pesticides were detected in soil samples below the residential and commercial/industrial ESLs. PCBs were detected in two of 15 soil samples, collected at Parcel 5, at concentrations above residential ESLs but below commercial screening levels. TPH in the diesel and/or motor oil range was reported in six of 15 soil samples above residential and commercial/industrial ESLs; these samples were from the top five feet of soils and were presumed to be a result of leaks and minor surface spills related to construction equipment and construction material storage. VOCs and TPHg were not detected above laboratory reporting limits in the soil samples.[24]

Soil Gases

Landfill gas is created when organic waste in a municipal solid waste landfill decomposes under anaerobic conditions. The landfill gas on the Project site is primarily composed of methane and carbon dioxide with trace amounts of VOCs, which is typical of a municipal solid waste landfill. Discarded items such as household cleaning products, materials coated with or containing paints and adhesives, and other items are common sources of VOCs in landfill gas.

A landfill gas collection and removal system was installed throughout the Project site, except Parcel 5 (which was not part of the Landfill), that consisted of 88 vertical extraction wells (Figure 3.11-1). Currently, 75 of the extraction wells are active and the remaining 13 have been decommissioned. The wellheads are connected to lateral lines that connect to a main header. The main header, which extends to all four parcels, transports the landfill gas to a landfill gas-to-energy (LGTE) plant. Main isolation valves for repair, shut down, and vacuum adjustment are installed at each junction of the main header and respective laterals. In addition to the landfill gas collection wells, multiple condensate traps are present in each parcel at low points to gravity drain the collected condensate back into the refuse and away from the landfill gas collection wells.

The LGTE plant, located adjacent to the BMX track off Lafayette Street, was commissioned in 2009 and is owned and operated by Ameresco. The plant consists of three FlexEnergy micro-turbines that combust the methane gas and other trace contaminants in the landfill gas to generate up to 750 kilowatts of power. As methane concentrations and landfill gas flows decline over time, the modular turbines will be removed one by one to match landfill gas production until the plant is no longer economical to operate. The turbines are capable of operating on landfill gas with as little as 30 percent methane.[25]

---

[23] Regional Water Board. 2013. *User's Guide: Derivation and Application of Environmental Screening Levels*. ESLs Workbook and Lookup Tables (a Microsoft 2010 Excel file). December.

[24] Cornerstone Earth Group. 2014. *Op. cit.*

[25] Ameresco Inc. 2012. *Nomination Packet for 2012 Landfill Gas Utilization Excellence Award, City of Santa Clara All-Purpose Landfill Gas to Energy Plant*. Prepared for Solid Waste Association of North America.

In April and October 2014, landfill gas investigations were performed at the Project site as part of a *Site Investigation and Environmental Risk Assessment* requested by the Regional Water Board. A total of 46 landfill gas samples were collected and analyzed to evaluate the magnitude and extent of specific gases across the Project site and to assess potential health risks to future receptors from landfill gases. The samples were collected from 32 extraction wells and 14 temporary landfill gas probes and analyzed for VOCs, methane, carbon dioxide, and oxygen.[26]

Concentrations of benzene, ethylbenzene, and vinyl chloride were reported above the Regional Water Board's residential and/or commercial/industrial ESLs[27] for soil gas in numerous landfill gas samples across the Project site, except Parcel 5. Benzene and vinyl chloride exceedances were generally equally distributed between all parcels and ethylbenzene exceedances were primarily detected at Parcels 1, 2, and 3 (in the Langan technical reports Parcel 3 is referred to as Parcel 3/6). Tetrachloroethylene (PCE) was also reported above the residential ESL for soil gas in one sample collected on Parcel 3, but PCE concentrations did not exceed the ESLs at any other sample locations.[28]

In 2014, a separate soil gas investigation was conducted on Parcel 5 and the tennis courts located in the southwest portion of Parcel 4, which are not underlain by refuse. Six temporary soil gas sampling wells were installed on the site. Soil gas samples were collected at 5 feet and 10 feet bgs from each well and analyzed for TPHg, VOCs, oxygen, carbon dioxide, and methane. Benzene was reported in soil gas samples collected from one well in the tennis court area of Parcel 4 and two wells on Parcel 5 at concentrations above the residential ESLs, but below the commercial/industrial ESLs. No other soil gases were detected above the residential and/or commercial/industrial ESLs.[29]

Leachate

Leachate is generated as water percolates through a landfill and mixes with dissolved materials from the decomposing wastes, which may contain toxic chemicals. The migration of leachate-containing toxic chemicals could pose a risk by contaminating groundwater and/or surface water. The risk of leachate migration into the environment from a landfill can be reduced by installing impermeable caps and liners along the top and bottom of a landfill, respectively, and using a leachate collection and removal system (LCRS).

A clay cap varying in thickness from 1 to 7 feet throughout the Landfill covers the refuse. The Landfill is underlain by alluvial deposits consisting predominately of clay and sandy clay layers with occasional interbedded layers of sand and silt.[30] While the low-permeability of the native clay layers reduce the risk of leachate migration into the groundwater, only the northern portion of Parcel 1 and Parcel 3 were required by the then-applicable regulations to have clay liners and separate LCRSs (Figure 3.11-1). Clay cut-off walls were also constructed around Parcel 1 and Parcel 2 to reduce the potential risk of leachate migration into surface water.[31] Based on historical groundwater data, the groundwater table is generally in or within 10 feet of the bottom layer of refuse at the Project site and a distinct mounded zone of leachate that rises significantly above the surrounding groundwater table has not developed.[32]

---

[26] Langan Treadwell Rollo. 2015a. *Op. cit.*
[27] Regional Water Board. 2013. *Op. cit.*
[28] Langan Treadwell Rollo. 2015a. *Op. cit.*
[29] Cornerstone Earth Group. 2014. *Op cit.*
[30] Langan Treadwell Rollo. 2015a. *Op. cit.*
[31] Golder Associates Inc. 2014. *Op. cit.*
[32] Langan Treadwell Rollo. 2015a. *Op. cit.*

The LCRSs in Parcel 3 and Parcel 1 consist of a network of collection drains that connect to leachate sumps. The collection drains are perforated pipes set either in a trench below the clay liner (Parcel 3) or set above the subgrade of the clay liner (Parcel 1) at the bottom of the refuse layer. Both types of collection drains are covered with gravel or drain rock. The trenched collection drains (Parcel 3) are covered with a drainage layer and the collection drains set above the subgrade (Parcel 1) are set within the drainage layer (Figure 3.11-2).

The leachate can be collected from four sumps in the Parcel 1 LCRS (LR-6 through LR-9) and three sumps in the Parcel 3 LCRS (LR-1, LR-3, and LR-4) (Figure 3.11-1). Currently, leachate/groundwater is recovered only from LR-1 on Parcel 3 using an automated pump. The existing LCRSs may have settled differentially over the years due to waste and soil cover above compressing the underlying native clay layer and, consequently, the systems may not be performing per the original design. Therefore, the existing grade of the LCRSs may be inverted causing leachate/groundwater recovery only in riser LR-1.[33]

Based on a February 2014 monitoring event, trace to low-level concentrations of VOCs and total metals were detected in the leachate sample taken from well LR-1.[34] Approximately 150,000 gallons of leachate were collected from LR-1 in 2013 and discharged directly into the sanitary sewer. There are also six leachate piezometers located on Parcels 1, 2, and 4 that are not part of a LCRS. Previous attempts to extract leachate from these piezometers have yielded about 3 to 4 gallons per hour; however, because of the slow rate of leachate recharge, the piezometers are not used for leachate extraction.[35]

Groundwater Quality

In accordance with the self-monitoring program contained in WDR Order No. R2-2002-08, primary contaminants of concern in groundwater are monitored semi-annually at the Landfill. In addition, a more comprehensive suite of contaminants typically associated with landfills is analyzed once every 5 years. Groundwater samples are collected from 19 monitoring wells and 3 piezometers. The monitoring wells are located along the perimeters of the parcels and the piezometers are generally located northeast of Parcel 3. The 3 piezometers and 16 of the 19 monitoring wells are screened in a shallow sand zone that is typically encountered between 0 and 25 feet below the pre-landfill ground surface. The other three monitoring wells are screened in a deeper sand zone that is typically encountered at about 40 feet below the pre-landfill ground surface.[36] Groundwater elevations have ranged from about -10 to 7 feet (NAVD 88)[37] with a gradient (i.e., groundwater flow direction) to the north-northeast.[38]

Based on historical groundwater monitoring data, concentrations of 1,1-dichloroethene (DCE), *cis*-1,2-DCE, *trans*-1,2-DCE, trichloroethylene (TCE), and vinyl chloride have exceeded the groundwater ESLs for potential drinking water resources, the residential vapor intrusion ESLs, and/or the commercial/industrial vapor intrusion ESLs.[39] Since 1988, the groundwater impacts have been

[33] Langan. 2015b. *Technical Memorandum: Leachate Collection and Removal System Concept Plans, City Place Santa Clara, Santa Clara, California*. Langan Project No.: 770611601. 6 February.
[34] Golder Associates Inc. 2014. *Op. cit*.
[35] Langan. 2015b. *Op. cit.*
[36] Golder Associates Inc. 2014. *Op. cit*.
[37] NAVD is the North American Vertical Datum, the current national geodetic vertical datum used and maintained by the National Geodetic Survey.
[38] Langan Treadwell Rollo. 2015a. *Op. cit.*
[39] Regional Water Board. 2013. *Op. cit.*

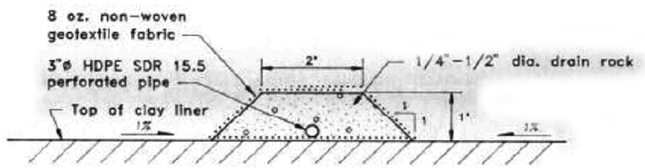

1 LEACHATE COLLECTION DRAIN IN PARCEL 1

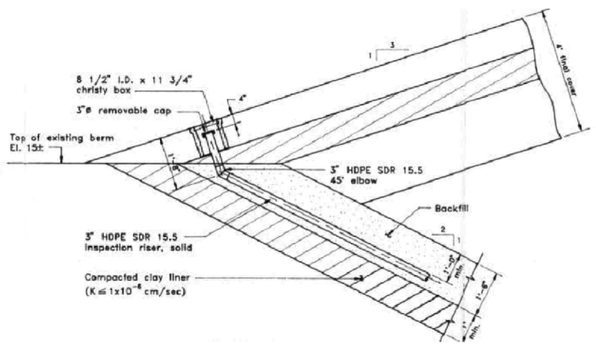

2 INSPECTION RISER (LEACHATE COLLECTION DRAIN) IN PARCEL 1

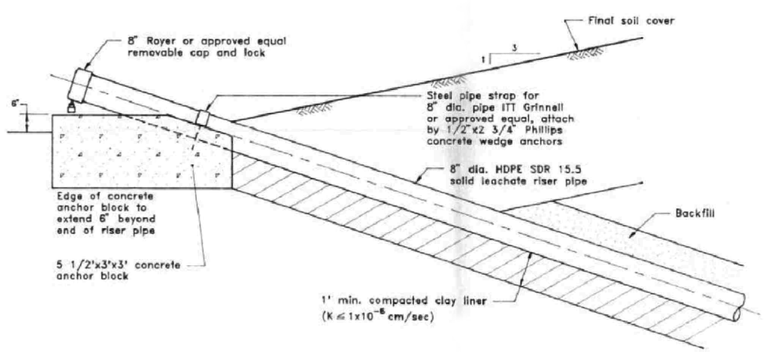

3 LEACHATE RISER IN PARCEL 1

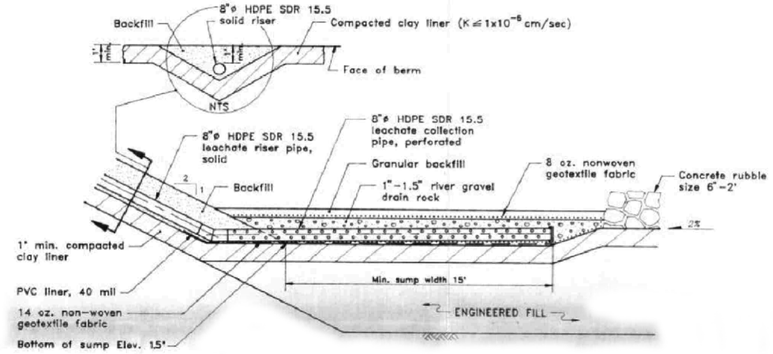

4 LEACHATE RISER AND SUMP IN PARCEL 1

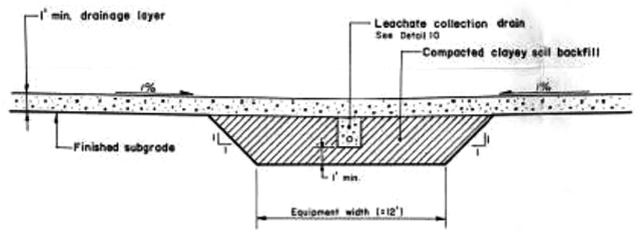

5 INTERIOR LEACHATE COLLECTION DRAIN–TRENCH CONDITION IN PARCEL 3/6

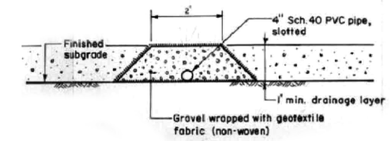

6 LEACHATE COLLECTION DRAIN–ABOVE GRADE IN PARCEL 3/6

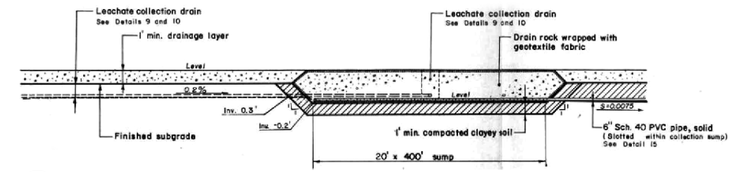

7 LEACHATE COLLECTION SUMP IN PARCEL 3/6

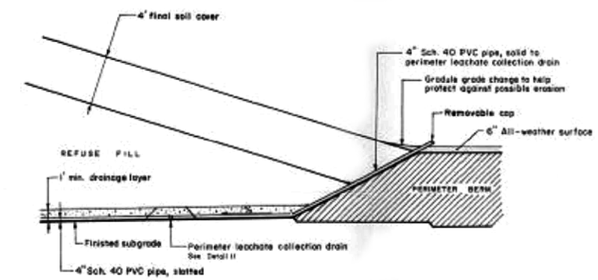

8 PERIMETER LEACHATE RISER IN PARCEL 3/6

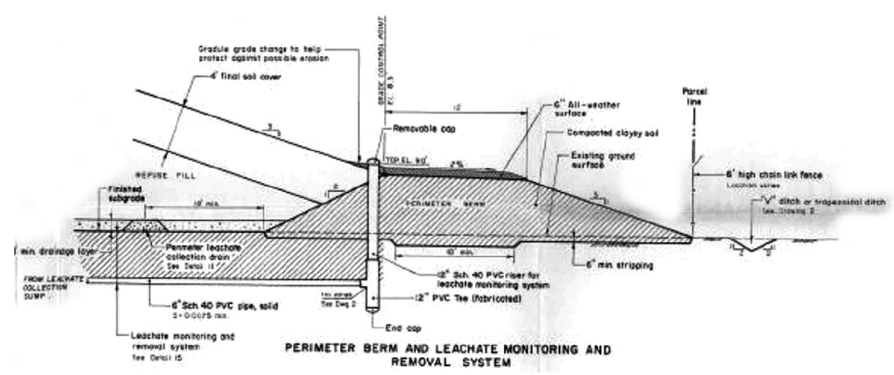

9 PERIMTER BERM AND LEACHATE MONITORING AND REMOVAL SYSTEM IN PARCEL 3/6

NOTE:
–THE CROSS–SECTIONS OF THE EXISTING LEACHATE COLLECTION SYSTEM ARE FROM EMCON ASSOCIATES DEVELOPMENT PLAN, JANUARY 1989.

Source: Langan Treadwell Rollo, 2014.

Graphics ... 00333.14 (5-19-2015) tm

Figure 3.11-2
Existing Leachate Collection System Cross Sections
City Place Santa Clara

generally limited to the interior of the Landfill beneath the northeastern portion of Parcel 4 and southeastern portion of Parcel 3.[40] Groundwater downgradient (to the northeast) of Parcels 3 and 4, which includes Parcels 1 and 2 and the Retention Basin, is generally not impacted by VOCs.

In March and October 2014, groundwater investigations were performed at the Project site as part of a *Site Investigation and Environmental Risk Assessment* requested by the Regional Water Board. The purpose of the investigations was to further evaluate the distribution of elevated VOC concentrations in groundwater beneath Parcel 4 and to assess potential health risks to future receptors from contaminated groundwater. Groundwater samples were collected from 12 temporary borings located on Parcel 4 and analyzed for TPHg, TPHd, TPHmo, and VOCs. Concentrations of TPHg, TPHd, TPHmo, benzene, t-butyl alcohol, naphthalene, *cis*-1,2-DCE, TCE, and vinyl chloride were reported above the groundwater ESLs for potential drinking water resources.[41]

Parcel 5 is located south and hydraulically upgradient of Parcel 4. Because wells upgradient of Parcel 4 did not contain VOC contamination, it is assumed that groundwater beneath Parcel 5, which is similarly upgradient, is also not affected by the VOC contamination from the landfill. Previous soil investigations on Parcel 5 and the tennis courts located in the southwest portion of Parcel 4 identified elevated levels of benzo[a]pyrene, benzene, PCBs, TPHd, and TPHmo; however, potential impacts to groundwater have not been investigated.[42]

Hazardous Building Materials

Hazardous materials are commonly found in building materials that may be affected during demolition and renovation activities. Building materials such as thermal system insulation, surfacing materials, and asphalt and vinyl flooring materials installed in buildings prior to 1981 may contain asbestos. As summarized in Table 3.11-1, existing buildings on the Project site were not built prior to 1981 and therefore would not be expected to contain asbestos.

Table 3.11-1. Existing Buildings Affected by Project

Building	Construction Year
Golf Course Clubhouse	1987
Golf Course Maintenance Facility	1986
Banquet Facility and Meeting Room	1999
Restroom Building	1991
Fire Station 10	1986

Source: City of Santa Clara. 2014.

Lead compounds may be present in interior and exterior paints used for commercial buildings, regardless of construction date.[43] Lead is a state-recognized carcinogen[44] and demolition of buildings containing lead-based paint could release lead particles into the air, which then may be inhaled by

[40] Golder Associates Inc. 2014. *Op. cit*.
[41] Langan Treadwell Rollo. 2015a. *Op. cit.*
[42] Cornerstone Earth Group. 2014. *Op cit.*
[43] DTSC. 2006. *Interim Guidance Evaluation of School Sites with Potential Soil Contamination as a Result of Lead from Lead-Based Paint, Organochlorine Pesticides from Termiticides, and Polychlorinated Biphenyls from Electrical Transformers*. 9 June (revised).
[44] Cal/EPA, Office of Environmental Health Hazard Assessment. 2014. *Safe Drinking Water and Toxic Enforcement Act of 1986, Chemicals Known to the State to Cause Cancer or Reproductive Toxicity*. 6 June.

construction workers and the general public. In addition, other common items present in buildings, such as electrical transformers, fluorescent lighting, electrical switches, heating/cooling equipment, and thermostats could contain hazardous materials, which may pose a health risk if not handled and disposed of properly.

School Receptors

The nearest school to the Project site is the Kathryn Hughes Elementary School, which is located about 0.2 mile to the southeast. There are no other schools located within 0.25 mile of the Project site.[45]

Aviation Hazards

There are no private airstrips located within 2 miles of the Project site.[46] The nearest public-use airport to the Project site is the Norman Y. Mineta San José International Airport, which is located approximately 2.8 miles southeast of the Project site. According to the CLUP adopted for the airport by the ALUC, portions of the Project site (Parcels 3, 4, and 5) are located within the Airport Influence Area because of height restrictions established by FAR Part 77. The FAR Part 77 height restrictions are designed to protect navigable airspace around the airport.[47] The height restrictions for structures on Parcel 5 range from about 330 to 340 feet (NAVD 88). The height restrictions for structures on Parcel 4 range from about 330 to 395 feet (NAVD 88). The height restrictions for structures on Parcel 3 range from about 377 to 412 feet (NAVD 88). The other parcels on the Project site are not located inside the Airport Influence Area.

Fire Hazards

Wildland Fires

CAL FIRE has mapped Very High Fire Hazard Severity Zones in Santa Clara County to assist responsible local agencies, such as SCFD, identify measures to reduce the potential for losses of life, property, and resources from wildland fire. CAL FIRE has determined that there are no Very High Fire Hazard Severity Zones in the City of Santa Clara.[48]

Subsurface Fires

In California, more than 25 subsurface landfill fires have been reported during the past 15 years. Most incidents are small fires or rapid oxidation events that rarely require a large-scale environmental response.[49] Subsurface fires commonly burn slowly without visible flame or large quantities of smoke.

---

[45] City of Santa Clara. 2011. *Integrated Final Environmental Impact Report.* City of Santa Clara Draft 2010–2035 General Plan. Figure 4.1-1: Existing General Plan Land Use Designations. Page 97. January.

[46] FAA. 2014. *Airport Data and Contact Information*. Available: http://www.faa.gov/airports/airport_safety/airportdata_5010/. Accessed: December 2, 2013. Last updated: 13 November.

[47] Santa Clara County ALUC. 2011. *Comprehensive Land Use Plan, Santa Clara County, Norman Y. Mineta San José International Airport*. 25 May.

[48] CAL FIRE. 2008. *Very High Fire Hazard Severity Zones in LRA, as Recommended by CAL FIRE*. Santa Clara County. 8 October.

[49] CalRecycle. 2006. *Landfill Fires Guidance Document*. Available: http://www.calrecycle.ca.gov/SWFacilities/Fires/lffiresguide/default.htm. Accessed: November 26, 2014. Last updated: 28 June.

These fires can result in rapid settlement, smoke, odors, toxic emissions, and damage to landfill control systems, liners, caps, and/or Project infrastructure.[50]

A subsurface fire typically starts by overdrawing the landfill gas collection system. Over application of the vacuum on a landfill gas collection system increases the intrusion of oxygen (i.e., air) into the subsurface, which can result in aerobic microbiological decomposition of organic waste materials. The aerobic decomposition process releases heat, which under certain conditions can ignite waste materials. Should a subsurface fire occur, the waste mass tends to oxidize around extraction wells, in the influence zone of extraction wells, or near a surface feature that allows oxygen to enter the waste mass. Although less common, spontaneous combustion is another source of subsurface fires that can result from chemical oxidation of common household wastes or construction debris (e.g., oily rags, paints, solvents, batteries).[51]

No fires have occurred at the closed landfill on the Project site, either from methane gas or landfill gas collection equipment. Under normal operating conditions, the landfill gases are converted into electricity using micro-turbines at the LGTE plant. If the micro-turbines are offline for any reason, the collected landfill gas is combusted by a flare. The accessible side slopes of Parcels 1 and 3 and the top of Parcel 1 are regularly mowed to prevent vegetation from becoming a potential fire fuel source.[52]

In accordance with BAAQMD Regulation 8, Rule 34, the wellheads for the landfill gas collection and removal system are sampled monthly for methane, oxygen, carbon dioxide, balance gas (primarily nitrogen), temperature, and vacuum pressure and an annual report that includes the monthly monitoring results is submitted to the BAAQMD. If the gas temperature increases significantly over prior monitoring results or the measured temperature exceeds 125° Fahrenheit (when it has historically operated at lower temperatures) the field technician measures for the presence of carbon monoxide using a Draeger-tube system to indicate if a subsurface heating event is occurring.[53]

Off-Site Areas

Tasman East

Up to three light industrial buildings in the Tasman East area (2101, 2111, and/or 2121 Tasman Drive) would be demolished to accommodate the proposed Lick Mill Boulevard extension. Historical topographic maps show that the Tasman East area was used for agriculture since at least 1951,[54] with orchards shown on the site from 1953 through 1968.[55] By 1973, the orchards had been removed,[56] and by 1980, light industrial buildings to the north and west of the affected buildings had been constructed.[57] The three light industrial buildings at 2101, 2111, and 2121 Tasman Drive were

[50] Ohio Environmental Protection Agency. 2011. *Subsurface Heating Events at Solid Waste and Construction and Demolition Debris Landfills: Best Management Practices*.

[51] CalRecycle. 2006. *Op. cit*.

[52] Staub, Dave. 2015. Personal communication between Dave Staub, City of Santa Clara, and Kirsten Chapman, ICF International. March 10.

[53] Haughey, Rich. 2015. Personal communication between Rick Haughey, Golder Associates, Inc., and Dave Staub, City of Santa Clara. April 21.

[54] U.S. Geologic Survey. 1951. San José Quadrangle, 15-minute topographic map.

[55] U.S. Geologic Survey. 1968. Milpitas Quadrangle, 7.5-minute topographic map.

[56] U.S. Geologic Survey. 1973. Milpitas Quadrangle, 7.5-minute topographic map.

[57] U.S. Geologic Survey. 1980. Milpitas Quadrangle, 7.5-minute topographic map.

constructed in 1984. No changes in land use after that date were noted in aerial photographs from 1993, 2000, 2006, or 2010.[58]

A review of an environmental database report of hazardous materials sites in the Tasman East area identified only one record. Latitude Communications at 2121 Tasman Drive was listed on the State HAZMAT hazardous waste manifest database as the generator of 400 pounds of inorganic solid waste in 2002.[59] No hazardous waste regulation violations or hazardous materials releases were recorded for 2121 Tasman Drive.

The potential for groundwater contamination from large hazardous materials release sites to migrate beneath the Tasman East area was evaluated by reviewing the status of federal Superfund sites and State Response sites located within 1 mile of the Tasman East area. Based on review of the DTSC's EnviroStor database, there are no active federal Superfund sites and State Response sites within 1 mile of Tasman East area. The potential for smaller groundwater contaminant plumes that would be expected from other hazardous materials release sites was evaluated within 0.25 mile of the Tasman East area. Based on review of an environmental database report, eight hazardous materials release sites were identified within 0.25 mile of the Tasman East area.[60] Details for each of the sites is provided below.

- **Bill Doran Co., 2200 Calle de Luna.** A release of gasoline from an underground storage tank was reported at this location. The case was closed in 1995, indicating remediation was completed or not necessary.
- **Coatek, Inc., 2222 Calle de Luna.** This site was listed as an inactive hazardous materials release site on the DTSC's EnviroStor database for hazardous waste facilities and cleanup sites. The site may be subject to further investigation due to its hazardous waste treatment permit. No hazardous materials releases from the site were noted in the EnviroStor record.
- **Nu-Metal Finishing, 2262 Calle del Mundo.** This site was listed in the California Hazardous Materials Information Reporting System (CHMIRS) database for reporting a hazardous materials incident in August 1988. The site was also on the Cortese list due to a former leaking underground storage tank and the DTSC's EnviroStor database for potential further evaluation due to its hazardous waste treatment permit. No active hazardous materials release cases at this site were noted in the database report.
- **Italix Company, Inc., 2232 Calle de Mundo.** This site was listed as an inactive hazardous materials release sites on the DTSC's EnviroStor database. The site may be subject to further investigation due to its hazardous waste treatment permit. No hazardous materials releases from the site were noted in the EnviroStor record.
- **Richard and Donna Wills Revocable Trust, 2301 Calle de Luna.** This site was listed on the Cortese list and Regional Water Board Spills Leaks Investigations and Cleanups (SLIC) database due to releases of the VOCs 1,1,1-trichloroethane (TCA) and PCE and other solvents while the site operated as D&H Manufacturing. Soil and groundwater contamination at the site was discovered in 2001. Further investigation and remediation has taken place since that time. The most recent five-year status update for the site indicates that the contamination has affected

[58] U.S. Geologic Survey. 1993; Digital Globe 1993, 2000, 2006, 2010. Historical aerial photographs, Santa Clara California.

[59] Environmental Data Resources. 2015a. *Radius Map Report with Geocheck, City Place Off-Site Areas – 1, 2111 Tasman Drive, Santa Clara*. 23 March.

[60] Environmental Data Resources. 2015a. *Op cit*.

only this property and the adjacent property to the east and has not migrated to groundwater beneath the Tasman East off-site area.[61]

- **Western Digital, 5102 Calle del Sol.** This site was listed as an inactive hazardous materials release site on the DTSC's EnviroStor database. The site may be subject to further investigation due to its hazardous waste treatment permit. No hazardous materials releases from the site were noted in the EnviroStor record.
- **Sun Circuits Incorporated, 5191 Lafayette Street.** This site was listed as an inactive hazardous materials release site on the DTSC's EnviroStor database. The site may be subject to further investigation because of its hazardous waste treatment permit. No hazardous materials releases from the site were noted in the EnviroStor record.
- **Akashic Memories Corporation, 305 W. Tasman.** The site was listed on the CHMIRS database due to a release of 5 gallons of antifreeze to a storm drain in 1993. This site was also listed as an inactive hazardous materials release site on the DTSC's EnviroStor database. The site may be subject to further investigation because of its hazardous waste treatment permit. No active hazardous materials release cases at the site were noted in the environmental database report.

None of the reported hazardous material release sites within 0.25 mile would most likely have the potential to affect soils and groundwater beneath the Tasman East site.

No soil or groundwater quality data is available for Tasman East. Based on historical and regulatory records, there may be a possibility for soils to contain agricultural chemical residues from agricultural cultivation in the area from the 1950s through the 1970s. Although agricultural chemicals currently in use generally degrade into harmless compounds within weeks or months after application, the organic and inorganic pesticides used prior to the 1970s, including arsenic-based compounds and dichloro-diphenyl-trichloroethane (DDT), may leave residues that persist for decades. However, based on sampling at Parcel 5, which had a similar agricultural history as Tasman East, agricultural chemical residues in soil samples were well below ESLs and inorganic compounds were identified at naturally occurring concentrations.[62] No sources of potential groundwater contamination were identified in historical land use or regulatory records.

The three affected buildings in Tasman East were constructed in 1984, and therefore would not be expected to contain asbestos-containing materials, though lead-based paint could be present on painted surfaces of the buildings. Similar to the Project site, Katherine Hughes Elementary School is the only school within 0.25 mile of Tasman East. Wildfire and aviation hazards would be similar to those at the Project site.

Convention Center

Replacement of Fire Station 10 could be located in the Convention Center surface parking lot, across San Tomas Aquino Creek to the southwest of the Project site. The area around and including the Convention Center area was undeveloped agricultural land from the earliest available topographic map from 1951 through 1980.[63] The Convention Center and adjoining improvements, including the parking lot adjacent to the Project site, were constructed in 1986. No changes in land use at the Convention Center parking

[61] Treadwell and Rollo. 2010. *Five-Year Status Report, 2301 Calle de Luna, Santa Clara, California*. January 7.
[62] Cornerstone Earth Group. 2014. *Op. cit.*
[63] U.S. Geologic Survey. 1951, 1968, 1973, 1980. *Op cit.*

lot or adjoining properties were noted on aerial photographs after 1986.[64] It is likely that agricultural chemicals were applied to the site while under agricultural use during the 1950s through 1970s.

A review of a database report of hazardous materials sites in the Convention Center vicinity did not identify any records of hazardous materials use, storage, disposal, or release associated with the 5001 Great America Parkway address.[65] Two hazardous materials release sites within 0.25 mile of the Convention Center parking lot were identified in the database report. Details are presented below.

- **Shell, 6390 Great America Parkway.** Gasoline was released from leaking underground storage tanks at this site. The release case was closed in 2009, indicating that remediation was complete or not necessary.
- **Edelweiss Dairy Farm, 2955 Old Mountain View-Alviso Road.** This site was listed on the Cortese list due to a former underground storage tank site. The release case has been closed, indicating that remediation was complete or not necessary.

Based on the status of each case, neither of these hazardous materials release sites would be likely to affect soils and groundwater beneath the Convention Center parking lot.

No soil or groundwater quality data is available for the Convention Center surface parking lot. Based on historical and regulatory records, there may be a possibility for soils to contain agricultural chemical residues from agricultural cultivation of the site from the 1950s through the 1970s. However, based on sampling at Parcel 5, which had a similar agricultural history as the Convention Center area, agricultural chemical residues in soils were well below ESLs and inorganic compounds were identified at naturally occurring concentrations.[66] No sources of potential groundwater contamination were identified in historical land use or regulatory records.

No buildings are present on the Convention Center surface parking lot, so no asbestos or lead-based paint hazards would be anticipated. No schools are located within 0.25 mile of the parking lot. Wildfire and aviation hazards would be similar to those at the Project site, described above.

San Tomas Aquino Creek

To access Parcel 4, a new bridge would be constructed over San Tomas Aquino Creek. San Tomas Aquino Creek is a natural waterway with a north-south alignment. It has been present near the Project site since at least 1899, the date of the first available topographic map of the Project area.[67] Since that time, the creek has been modified and, in the City of Santa Clara, the creek is constrained to a constructed channel approximately 100 to 150 feet in width. The portion of the creek that would be affected by the Project is adjacent to the Convention Center surface parking lot, discussed above. Based on topographic maps and aerial photographs reviewed for the adjoining Convention Center area, the creek was channelized between 1961 and 1968.[68] None of the hazardous materials release sites identified near the Convention Center surface parking lot would affect soil and groundwater along San Tomas Aquino Creek. Other potential hazards would be similar to those identified for the Convention Center surface parking lot, above.

---

[64] U.S. Geologic Survey. 1993; Digital Globe 1993, 2000, 2006, 2010. *Op cit.*

[65] Environmental Data Resources. 2015b. *Radius Map Report with Geocheck, City Place Off-Site Areas – 2, 5001 Great America Parkway, Santa Clara*. 23 March.

[66] Cornerstone Earth Group. 2014. *Op cit.*

[67] U.S. Geologic Survey. 1899. *San José Quadrangle. 15-minute topographic map*.

[68] U.S. Geologic Survey. 1968. *Op cit.*

Tasman Draft Slip-Ramp

This slip-ramp would be located to the south of Tasman Drive and to the north of the Santa Clara Youth Soccer Park, providing a direct connection from Tasman Drive to Stars and Stripes Drive. There are no leaking underground storage tanks, cleanup sites, land disposal sites, or other known hazards at the location of the proposed slip-ramp.[69,70] No soil or groundwater quality data is available for the Tasman Drive slip-ramp area. No buildings are present in this area, so no asbestos or lead-based paint hazards would be anticipated. The Kathryn Hughes Elementary School is located within 0.15 mile this location. Wildfire and aviation hazards would be similar to those at the Project site, described above.

Santa Clara Gateway (Site Access Variant)

The Project could result in a new access point to Parcels 3 and 4 from Great America Parkway through the southern portion of the Santa Clara Gateway office complex parking lot. Under this variant, the existing entrance to the southern portion of Santa Clara Gateway at the Great America Parkway/Old Mountain View-Alviso Road intersection would be improved by extending the existing roadway farther east and then south to connect with the new City Place Parkway between Parcels 3 and 4. There is one permitted underground storage tank at the site, but it is outside the area that would be affected by the access variant.[71] No other known hazards are present at the site.

Environmental Impacts

This section describes the impact analysis relating to hazards and hazardous materials for the Project. It describes the methods used to determine the impacts of the Project and lists the thresholds used to conclude whether an impact would be significant. If appropriate, measures to mitigate (i.e., avoid, minimize, rectify, reduce, eliminate, or compensate for) significant impacts accompany each impact discussion.

Thresholds of Significance

In accordance with Appendix G of the State CEQA Guidelines, the Project would be considered to have a significant effect if it would result in any of the conditions listed below.

- Create a significant hazard to the public or the environment through the routine transport, use, or disposal of hazardous materials.
- Create a significant hazard to the public or the environment through reasonably foreseeable upset or accident conditions involving the release of hazardous materials into the environment.
- Emit hazardous emissions or handle hazardous or acutely hazardous materials, substances, or waste within 0.25 mile of an existing or proposed school.
- Be located on a site that is included on a list of hazardous materials sites compiled pursuant to Government Code Section 65962.5 (the "Cortese List," described above) and, as a result, would create a significant hazard to the public or the environment.

---

[69] State Water Resources Control Board. 2015. *Geotracker*. Available: http://geotracker.waterboards.ca.gov/. Accessed September 29, 2015.

[70] California Department of Toxic Substances Control. Hazardous Waste and Substances Site List. Available: http://www.dtsc.ca.gov/SiteCleanup/Cortese_List.cfm. Accessed September 29, 2015.

[71] State Water Resources Control Board. 2015. *Geotracker*. Available: http://geotracker.waterboards.ca.gov/. Accessed September 29, 2015.

- For a project located within an airport land use plan or, where such a plan has not been adopted, within 2 miles of a public airport or public use airport, result in a safety hazard for people residing or working in the project area.
- For a project within the vicinity of a private airstrip, result in a safety hazard for people residing or working in the project area.
- Impair or physically interfere with an adopted emergency response plan or emergency evacuation plan.
- Expose people or structures to a significant risk of loss, injury, or death involving wildland fires, including where wildlands are adjacent to urbanized areas or where residences are intermixed with wildlands.

In addition to the Appendix G of the State CEQA Guidelines, the Project would also be considered to have a significant effect if it would result in the condition listed below.

- Expose people or structures to a significant risk of loss, injury, or death involving subsurface fires caused by the heating of landfill waste materials.

Methods for Analysis

As described under *Regulatory Setting*, above, the use of hazardous materials is subject to numerous laws and regulations. In most cases, the laws and regulations pertaining to hazardous materials management are sufficient to minimize risks to human health and the environment. The impact analysis identifies areas where impacts related to hazardous materials during Project construction and operation would be subject to applicable laws and regulations.

To assess the potential for the Project to create a significant hazard to the public or environment related to subsurface hazardous materials, the impact analysis considers the pathways through which exposure to hazards could potentially occur and evaluates the controls that would foreseeably be placed on each of these pathways. The impact analysis is largely based on the following reports:

- *Post-Closure Land Use Plan, Former Santa Clara All-Purpose Landfill* by Langan Treadwell Rollo (August 2015);
- *Site Investigation and Environmental Risk Assessment* by Langan Treadwell Rollo (September 2015);
- *Feasibility Study of Groundwater Remediation Alternatives* by Langan Treadwell Rollo (July 2015);
- *Technical Memorandum: Waste Management Plan* by Langan Treadwell Rollo (January 2015);
- *Technical Memorandum: Leachate Collection and Removal System* by Langan Treadwell Rollo (February 2015);
- *City of Santa Clara All-Purpose Landfill, First Semiannual 2014 Self-Monitoring Program Report* by Golder Associates Inc. (2014); and
- *Technical Memorandum: Parcel 5 Environmental Issues* by Langan Treadwell Rollo (September 2015).

The *Site Investigation and Environmental Risk Assessment* was used to evaluate potential health risks to receptors (construction workers, groundskeepers, indoor commercial workers, and residents) at areas of the Project site underlain by refuse. The assessment identified constituents of potential concern (COPC) in soil, landfill gas, and groundwater for each receptor by comparing chemical concentrations to the Regional Water Board's ESLs. Potential exposure pathways evaluated included ingestion, dermal absorption, and inhalation of vapors and/or dust.

A detailed health risk assessment was performed for each receptor by separating the health effects from the exposure to COPCs into cancer and health hazard impacts.[72] Health hazards are often referred to as "non-cancer" health effects and may be minor ailments such as eye or lung irritation or more severe ailments such as liver or kidney damage. The adverse health effects a person may experience following exposure to any chemical depend on several factors, including the amount to which one is exposed (i.e., dose), the duration of exposure, the form of the chemical, and if exposure to any other chemicals has occurred. A specific chemical may be considered a carcinogen or a health hazard or both; for instance, benzene is considered both a carcinogen and a health hazard.

Carcinogens are assumed to have no safe exposure threshold, and cancer risk is expressed as excess cancer cases per one million exposed individuals over a given duration of exposure. Cancer risk estimates for groundskeepers, construction workers, and indoor commercial workers were based on an exposure duration of 25 years. Cancer risk estimates for residents were based on an exposure duration of 30 years.[73] The Regional Water Board has established a cumulative incremental cancer risk[74] target of 1E-06 (one in a million) for evaluating risk and cleanup options at the Project site.[75]

Non-carcinogenic substances are generally assumed to have a safe threshold below which health impacts would not occur. Acute exposure (less than a year) and chronic exposure (more than a year) to non-carcinogens is expressed as a hazard index (HI), which describes the likelihood of adverse non-cancer health effects. The Regional Water Board has established that an HI less than 1.0 is acceptable for evaluating risk and cleanup options at the Project site.[76]

Scheme Analysis

The analysis of Project impacts related to hazards and hazardous materials considers Scheme A because it would result in the greatest amount of residential receptor populations, but the analysis would equally apply to Scheme B.

Impacts Not Evaluated In Detail

Private Airstrips

There are no private airstrips in the vicinity of the Project site. The Project would have ***no impact*** related to aviation hazards for private airstrip operations; therefore, this impact is not evaluated further.

---

[72] Langan Treadwell Rollo. 2015a. *Op. cit.*

[73] Langan Treadwell Rollo. 2015a. *Op. cit.*

[74] The "cumulative incremental cancer risk" refers to the sum of cancer risks estimated for each COPC identified on the Project site.

[75] Langan Treadwell Rollo. 2015b. *Technical Memorandum: Feasibility Study of Groundwater Remediation Alternatives*, *City Place Santa Clara/Santa Clara All Purpose Landfill Site Santa Clara, California.* Langan Project No.: 770611601. 21 July.

[76] Langan Treadwell Rollo. 2015b. *Op. cit*.

Wildland Fires

The Project site is surrounded by urban development and is not mapped in or adjacent to a Very High Fire Hazard Severity Zone. There would be ***no impact*** related to wildland fire hazards; therefore, this impact is not evaluated further.

Impacts and Mitigation Measures

Impact HAZ-1: Routine Hazardous Materials Use. The Project would not create a significant hazard to the public or the environment through the routine transport, use, or disposal of hazardous materials. (LTS)

Project construction activities would include the routine transport, use, or disposal of hazardous materials, such as motor fuels, oils, solvents, and lubricants. These construction activities would take place both at the Project site and off-site areas. Common construction activities, such as fueling, maintenance, and operation of construction equipment, could result in an accidental release of hazardous materials into the environment. The use of hazardous materials at the Project site during construction would be subject to existing hazardous materials laws and regulations, and adherence to these standards would reduce the potential occurrence of an accidental release. In addition, a Stormwater Pollution Prevention Plan (SWPPP) must be prepared for coverage under the Construction General Permit in accordance with the requirements of the SWRCB. As detailed in Section 3.10, *Hydrology and Water Quality*, the SWPPP requires implementation of best management practices (BMPs) for hazardous materials storage and soil stockpiles, inspections, maintenance, training of employees, and containment of releases to prevent runoff into existing stormwater collection systems or waterways. Because compliance with existing regulations is mandatory, the routine transport, use, or disposal of hazardous materials during Project construction would have a ***less-than-significant*** impact on the public or the environment.

The Project includes residential (Parcels 4 and 5 only), commercial, office, hotel, and entertainment land uses (all parcels), where small quantities of commercially available hazardous materials, such as household cleaning and landscaping supplies, as well as diesel fuel for backup generators, would routinely be handled and used. The relocated Fire Station 10 would use similar types and quantities of hazardous materials as the existing fire station. Hazardous materials storage would not be expected at the Tasman East, San Tomas Aquino Creek, Santa Clara Gateway access variant, or Tasman Drive slip-ramp areas. The relatively low toxicity and small quantities of these kinds of hazardous materials do not generally pose a threat to human health or the environment. Some office uses (e.g., research and development facilities) may also use larger quantities of hazardous materials that could pose a potential threat to human health and the environment. As described in the *Regulatory Setting*, above, the management of large quantities of hazardous materials (including diesel fuel for emergency generators) is subject to laws and regulations, particularly the Unified Program administered by the SCFD. The Unified Program ensures that facilities properly manage and disclose hazardous materials used to minimize the risk of a hazardous materials release and improve emergency response actions in the event of a release. Because compliance with existing regulations would be mandatory, the routine transport, use, or disposal of hazardous materials during Project operation would have a ***less-than-significant*** impact on the public or the environment.

Impact HAZ-2: Accidental Release of Hazardous Materials. The Project could create a significant hazard to construction workers, the public, and/or the environment through the release of hazardous materials into the environment during demolition and excavation. (LTS/M)

Potential upset and accident conditions associated with building demolition and excavation activities at the Project site, as well as accidental releases of hazardous materials from nearby facilities, are discussed below.

Project Demolition

Demolition of buildings containing hazardous building materials on the Project site and in Tasman East could potentially release hazardous materials into the environment. The removal of hazardous building materials prior to demolition is governed by federal and state regulations. Section 19827.5 of the California Health and Safety Code requires that local agencies not issue demolition or alteration permits until an applicant has demonstrated compliance with notification requirements under applicable federal regulations regarding hazardous air pollutants.

Based on the age of the buildings, asbestos-containing materials are not expected to be encountered during demolition. Loose and peeling lead-based paint may be present and must be disposed of as a State and/or federal hazardous waste if the concentration of lead equals or exceeds applicable waste thresholds. State and federal OSHA regulations require a supervisor who is certified to identify existing and predictable lead hazards to oversee air monitoring and other protective measures during demolition activities where lead-based paint may be present. Special protective measures and notification to Cal/OSHA are required for highly hazardous construction tasks related to lead, such as manual demolition, abrasive blasting, welding, cutting, or torch burning of structures where lead-based paint is present. Fluorescent lighting tubes and ballasts, mercury thermometers, and several other common items containing hazardous materials are regulated under the California Universal Waste Rule, which is less stringent than most other federal and state hazardous waste regulations. To manage universal waste in accordance with the streamlined requirements for the State of California, generators must relinquish the waste to a universal waste transporter, another universal waste handler, or a universal waste destination facility. Because compliance with existing regulations would be mandatory, the Project would have a ***less-than-significant*** impact on the public or the environment during building demolition activities.

Project Excavation of Areas Underlain by Refuse

The following analysis pertains only to those areas of the Project site underlain by refuse. The surface grades vary between 3 and 25 feet above the refuse. Project activities would be expected to penetrate into the waste units (i.e., encounter landfill waste) in three ways: (1) constructing the utility trenches, (2) general excavation and grading and leveling activities, and (3) pile placement (both auger cast in place piles and drilled displacement columns would penetrate into the waste units). These penetrations into the waste units could expose construction workers to landfill waste (e.g., trash and debris), contaminated soil, airborne dust, and landfill gas. These materials may contain total petroleum hydrocarbons, VOCs, metals, and methane gas at levels that could present health risks to construction workers. In addition, methane could be encountered at levels that could pose an explosion hazard. With regard to methane, this discussion focuses on potential methane hazards associated with construction (potential methane-related impacts associated with the operational phase of the Project are discussed under Impact HAZ-4, below).

Based on the *Site Investigation and Environmental Risk Assessment*, potential receptors who could be exposed to soil contamination on the Project site were identified as construction workers (and groundskeepers, which are discussed below under Impact HAZ-4). The direct soil exposure pathways for construction workers include potential ingestion, dermal absorption, and outdoor inhalation of vapors and dust. The *Site Investigation and Environmental Risk Assessment* determined that the source of potential exposure to contaminants in soils would most likely occur between 0 to 10 feet bgs; therefore, soil analytical results for samples collected between 0 to 10 feet bgs, which includes soil cover, landfill cap, and refuse materials, were used to assess human health risks related to exposure to contaminants in soil.

The COPCs for construction workers were determined by comparing the maximum concentrations of metals and VOCs reported in soil samples to the Regional Water Board's direct exposure ESLs for construction workers. Based on the maximum soil concentrations, arsenic was the only COPC identified for construction workers at the Project site. The 95th percent upper confidence limit (UCL_{95}) of the mean soil concentration was estimated for arsenic. The UCL_{95} of the mean soil concentration represents a reasonable maximum exposure estimate (i.e., a conservative estimate) of concentrations likely to be contacted over time. The EPA recommends using the UCL_{95} of the mean soil concentration as an exposure point concentration in human health risk assessments. Because the UCL_{95} concentration for arsenic (7.2 milligrams per kilogram [mg/kg]) was below the Regional Water Board's recommended background level (11 mg/kg), arsenic was eliminated as a COPC for construction workers. Therefore, no unacceptable cancer and non-cancer risks would be posed to construction workers at the Project site.

The *Site Investigation and Environmental Risk Assessment* indicates that construction workers would not be exposed to COPCs in soil at the Project site above applicable health risk thresholds. However, the Project would place construction workers in proximity to known contaminants during excavation activities, and it is possible that localized areas of soil at the Project site contain higher levels of COPCs than indicated by the existing data. The potential exposure of construction workers to COPCs in soil is a ***significant impact***.

MITIGATION MEASURE. Although the risk assessment indicates that no unacceptable cancer and non-cancer risks would be posed to construction workers exposed to COPCs in soil at the Project site, Mitigation Measure HAZ-2.1 requires that the additional safety measures outlined in the *Draft Waste Management Plan* implemented during excavation activities to further protect construction workers. The Project would have a ***less-than-significant impact with mitigation*** on construction workers during excavation activities.

HAZ-2.1: Finalize Waste Management Plan for Construction. Prior to Project construction, a final *Waste Management Plan* shall be prepared and implemented. This plan shall be submitted to the LEA, CalRecycle, Regional Water Board, and BAAQMD for review and approval. Specifically, the final *Waste Management Plan* shall contain, at a minimum, the following requirements, which are included in the draft *Waste Management Plan*:

- Waste excavation shall be performed in accordance with a Health and Safety Plan (HASP) designed to minimize impacts from dust, odor, and other nuisances, and assure waste is handled in a safe and environmentally responsible manner.
- During waste excavation and relocation, the worksite shall be monitored for dust, odor, or other nuisances in accordance with general landfill construction practices and the HASP.
- At the end of the working day, any exposed waste shall be covered with soil or an alternative material, such as a geosynthetic blanket, (i.e., interim cover).

- Odors, should they occur, shall be controlled by application of a deodorant, masking agent, neutralizing agent, or lime, and an interim landfill cover at the end of each working day.
- A "Project Contact" shall be designated who will be responsible for responding to any local complaints about dust, odors, or other nuisances associated with the waste excavation and regrading operations.
- During excavation activities, excavation areas shall be monitored using a hand-held instrument calibrated to measure combustible gases (including methane), hydrogen sulfide, oxygen, and VOCs.
- No hot work (e.g., welding) shall be allowed in the vicinity of excavation activities unless methane concentrations are sufficiently below the lower explosive limit of 5 percent. If methane concentrations approach 5 percent, excavation activities shall be stopped until the landfill gas collection system can be modified to reduce the methane concentrations in the excavation area. If methane levels are persistent in areas where earthwork and/or hot work activities are necessary, inert gases (e.g., nitrogen) can be introduced into affected subsurface materials to lower oxygen and methane concentrations. By introducing an inert gas into the affected area, methane and oxygen can be displaced to create insufficient oxygen concentrations to support combustion.

With the exception of fugitive dust emissions, the potential exposure of the general public to COPCs in soil during Project excavation activities would be relatively low compared to construction workers. Because it has been determined that the Project would not have a significant impact on construction workers exposed to COPCs in soil during excavation activities, and the general public would have less potential exposure to these soils than the construction workers, the Project would have a ***less-than-significant*** impact on the general public.

Accidental Hazardous Materials Releases from Off-Site Sources

In April 2015, an evaluation was performed by BASELINE Environmental consulting to determine whether there is a potential for one or more existing off-site commercial/industrial facilities to have an accidental release of a hazardous material that could endanger the health and/or safety of future users of the Project. The types of chemicals that pose a danger consist of toxic gases or chemicals that could form toxic vapors and flammable or explosive chemicals. The evaluation included a search of facilities within 0.5 mile of the Project boundary that are managed under the California Accidental Release Prevention (CalARP) Program. These facilities store large quantities of hazardous materials that have the potential to impact off-site receptors if accidentally released. The 0.5-mile search area included portions of the City of Santa Clara and portions of the City of San José.

As codified under Title 19, Chapter 4.5, of the California Code of Regulations, CalARP regulates facilities that store greater than a threshold quantity of a regulated substance. CalARP was adapted from the federal accidental release program established by the Clean Air Act Section 112 (r) and modified to meet California's needs. The regulated substances include 276 toxic chemicals and 63 flammable substances, which the State has determined represent a potential health and safety hazard beyond the facility's boundary, if more than the threshold quantity is stored. This program requires a facility to develop the following: (1) a Hazard Assessment, (2) Prevention Elements, (3) a Management System, and (4) an Emergency Response Program. The Hazard Assessment requires external event analyses, including seismic analysis, "worst case" scenarios, "alternate release" scenarios, and an accident history. The Prevention Elements, which are in place to prevent an accidental release, include operating procedures,

mechanical integrity, training, incident investigation, and managing change that may occur in the processes. The facilities are required to have a management system in place to ensure that all of the prevention elements are being implemented and a compliance audit process to improve on the different prevention elements. The facilities are required to have an emergency response program, including an emergency response plan. The facilities are required to develop and submit a Risk Management Plan that is a public document submitted to the CUPA. The SCFD is the CUPA for the City of Santa Clara.

Since January 1, 2013, all regulated facilities are required to report their Hazardous Materials Business Plan, Emergency Response Plans and Procedures, and site diagrams, chemical inventory, underground storage tank, aboveground storage tank, and waste generator data electronically into the California Environmental Reporting System (CERS) database. Additionally, all regulated facilities are required to upload their Emergency Response Plans and Procedures, and Site Diagrams. At BASELINE's request, the SCFD performed a search of the CERS database to determine whether there were facilities within 0.5 mile of the Project that are subject to CalARP regulations. The search performed by the SCFD included the relevant portions of both the City of Santa Clara and the City of San José.

Based on the SCFD's search of the CERS database, none of the CUPA-regulated facilities within 0.5mile of the City Place Project boundary are CalARP facilities. Therefore, an accidental release of stored hazardous materials from commercial/industrial facilities within 0.5 mile of the Project would have a ***less-than-significant*** impact on the Project.

Impact HAZ-3: Proximity to Sensitive Receptors at Schools. The Project would not create a potentially significant hazard to nearby schools from the emissions and handling of hazardous or acutely hazardous materials. (LTS)

The handling or emission of hazardous or acutely hazardous materials near schools must consider potential health effects to children, who are considered sensitive receptors. The only school within 0.25 mile of the Project site is the Kathryn Hughes Elementary School, which is located about 0.2 mile to the southeast of the Project site. The only plausible exposure pathway of concern is the inhalation of air contaminants, such as particulate matter.

Sources of hazardous emissions during Project construction and operation would include diesel particulate matter from vehicle exhaust, operation of emergency generators, and landfill gas emissions from the LGTE plant. As discussed under Section 3.4, *Air Quality*, these emission sources would have a less-than-significant impact on the school. As discussed under Impact HAZ-1, above, hazardous materials used during construction and operation would be managed in accordance with applicable laws and regulations. Therefore, emissions and handling of hazardous or acutely hazardous materials during Project construction and operation would have a ***less-than-significant*** impact on nearby schools.

Impact HAZ-4: Landfill Hazards – Hazardous Materials. The Project is located on a landfill where subsurface hazardous materials could pose a significant hazard to human health. (LTS/M)

Parcels 1, 2, 3, and 4 are located on a closed landfill, which is a hazardous materials site included on the Cortese List. As described below, the *Site Investigation and Environmental Risk Assessment* for these parcels identified baseline concentrations of COPCs in landfill gas, soil, and groundwater that could pose potentially significant health hazards to groundskeepers, indoor commercial workers, and residents at areas of the Project site underlain by refuse.

Landfill Gas

The *Site Investigation and Environmental Risk Assessment* for Parcels 1, 2, 3, and 4 identified benzene, ethylbenzene, and vinyl chloride as COPCs in landfill gas because the maximum concentrations were reported above the Regional Water Board's residential and/or commercial/industrial ESLs for soil gas. Due to potential accumulation of gases, the inhalation of COPCs in indoor air poses a greater health risk than outdoor air. The health risks to both indoor residents and commercial workers from the inhalation of COPCs in landfill gas were evaluated on Parcel 4.[77] Health risks to future indoor commercial workers from the inhalation of COPCs in landfill gas was evaluated on Parcels 1, 2, and 3, because residential land uses are not proposed for these parcels.

The human health risks posed by the COPCs identified in landfill gas beneath the Project site were modeled under a baseline assumption that soil vapor/landfill gas controls required by 27 CCR 21190 would not be in use. This is a conservative assumption (i.e., the health risk assessment results most likely overestimate the risk hazard) because when the landfill gas collection system is operating, landfill gas will preferentially flow toward the collection wells and not upward toward the building foundations.[78] The Project proposes to replace and upgrade the landfill gas collection during construction.

The cumulative incremental cancer risk for indoor commercial workers ranged from 4E-07 to 6E-07 (0.4 in a million to 0.6 in a million) for all COPCs in indoor air from landfill gas, which is below the Regional Water Board's accepted risk threshold 1E-06 (1 in a million). The HI for non-cancer risk for indoor commercial workers ranged from 0.003 to 0.01 for all COPCs in indoor air from landfill gas. These estimates were below the Regional Water Board's HI threshold level of 1.0. Therefore, no unacceptable cancer and non-cancer risks would be posed to indoor commercial workers on Parcels 1, 2, 3, and 4 from the inhalation of COPCs in landfill gas.

On Parcel 4, under the baseline assumption that soil vapor/landfill gas controls required by 27 CCR 21190 would not be in use, the cumulative incremental cancer risk was 5E-06 (5 in a million) for residents exposed to all COPCs in indoor air from landfill gas. This cancer risk is above the Regional Water Board's accepted risk threshold of 1E-06 (1 in a million), which means the health risk could be a ***significant*** impact. The HI for non-cancer risk for indoor residents on Parcel 4 was 0.1 for all COPCs in indoor air from landfill gas, which is below the Regional Water Board's threshold level of 1.0.

In 2014, the methane concentration in landfill gas reported at the LGTE plant was 46.1 percent by volume in air (%v). During the site investigations, methane was detected in all 46 samples at concentrations ranging from 1.98%v to 51.4%v. The lower explosive limit (i.e., the lowest concentration needed for ignition and an explosion to occur) for methane is 5%v at 20 degrees Celsius (68 degrees Fahrenheit). Without implementation of measures to prevent the accumulation of methane gases below or inside buildings there is a risk of explosion, which would pose a ***significant*** impact on residents, workers, and/or patrons on the Project site.

[77] It is possible for soil gas and landfill gas to migrate upward through the refuse and landfill cover and collect in building foundations and penetrate into indoor spaces.

[78] Langan Treadwell Rollo. 2015a. *Op. cit.*

Soil

Based on the *Site Investigation and Environmental Risk Assessment*, potential receptors who could be exposed to soil contamination on Parcels 1, 2, 3, and 4 were identified as groundskeepers (and construction workers, who are discussed above under Impact HAZ-2). The exposure pathways for a groundskeeper include potential ingestion, dermal absorption, and inhalation of vapors and dust. During general maintenance of the greenspace grounds, including lawn mowing, raking, and tree and shrub maintenance, a groundskeeper is expected to conduct soil-intensive activities (e.g., digging, planting, mulching) that result in a high degree of exposure to surface and subsurface soils on a daily basis, throughout the year, over multiple years. Residents (including children) and commercial workers at the Project site would not be expected to come into direct contact with soil because of the extensive hardscape that will cover the soil and create an incomplete exposure pathway.

Metals and VOCs reported in soil samples at the Project site were identified as COPCs for groundskeepers. Similar to construction workers (see impact HAZ-2, above), the UCL_{95} of the mean soil concentration was estimated for each COPC. Because the UCL_{95} concentration for arsenic (7.2 milligrams per kilogram [mg/kg]) was below the Regional Water Board's recommended background level for arsenic (11 mg/kg), arsenic was eliminated as a COPC for groundskeepers. Based on the UCL_{95} estimates, the cumulative incremental cancer risk (with arsenic removed) for groundskeepers exposed to COPCs in soil was 1E-07 (0.1 in a million), which is below the Regional Water Board's accepted risk threshold of 1E-06 (1 in a million). The HI for groundskeepers was 0.5 for all COPCs in soil and was below the Regional Water Board's threshold level of 1.0. Therefore, no unacceptable cancer and non-cancer risks would be posed to groundskeepers at the Project site exposed to COPCs in soil.

Groundwater

The groundwater beneath the Project site is not currently used for potable purposes, and given the elevated levels of total dissolved solids reported in groundwater beneath the Landfill (up to 22,000 milligrams per liter), it is not anticipated that groundwater is suitable for use as drinking water. Groundwater at the Project site has been encountered between 18.5 and 52 bgs;[79] therefore, future receptors on the Project site would not be expected to come into direct contact with the groundwater. The volatilization and migration of organic chemicals from groundwater to outdoor and indoor air represents a potential pathway for human exposure. Due to potential accumulation of gases, the inhalation of COPCs in indoor air poses a greater health risk than outdoor air. Based on historic and contemporary groundwater data collected from February 2005 through October 2014, the *Site Investigation and Environmental Risk Assessment* for the Project site identified TCE and vinyl chloride as COPCs in groundwater at Parcel 4 because concentrations exceeded the Regional Water Board's residential groundwater ESLs[80] for evaluating potential vapor intrusion. In addition, concentrations of vinyl chloride exceeded the commercial/industrial groundwater ESL for evaluating potential vapor intrusion.[81]

The human health risks posed by the COPCs identified in groundwater beneath the Project site were modeled under a baseline assumption that soil vapor/landfill gas controls required by 27 CCR 21190 would not be in use. This is a conservative assumption (i.e., the health risk assessment results most likely overestimate the risk hazard) because when the landfill gas collection system is operating, landfill

[79] Groundwater elevations have ranged from about -10 to 7 feet (NAVD 88).
[80] Regional Water Board. 2013. *Op. cit.*
[81] Langan Treadwell Rollo. 2015a. *Op. cit.*

gas (and volatilized contaminants from groundwater) will preferentially flow toward the collection wells and not upward toward the building foundations.[82] The Project proposes to replace and upgrade the landfill gas collection during construction. In addition, the site-wide maximum groundwater concentrations of TCE and vinyl chloride were used to conservatively model potential vapor intrusion impacts.

The cumulative incremental cancer risk for indoor commercial workers on Parcels 1, 2, 3, and 4 was 1E-06 (1 in a million) for all volatile COPCs in indoor air from groundwater. The cumulative incremental cancer risk for indoor residents on Parcel 4 was 1E-05 (10 in a million) for all volatile COPCs in indoor air from groundwater. These cancer risks are above the Regional Water Board's accepted risk threshold of 1E-06 (1 in a million), which means that under a baseline assumption that soil vapor/landfill gas controls required by 27 CCR 21190 would not be in use, the health risks could be a ***significant impact***. The HI for indoor non-cancer risk for commercial workers and residents on the Project site were 0.01 and 0.1, respectively, for all volatile COPCs in indoor air from groundwater, which are below the Regional Water Board's threshold level of 1.0.

It should be noted that there is some degree of overlap in the health risks estimated by the groundwater and landfill gas models for volatile COPCs in indoor air. Although the cumulative incremental cancer risk for commercial workers and indoor residents is higher based on the groundwater model, the modeling approach incorporates more variables and assumptions than the landfill gas model. As described in the *Feasibility Study of Groundwater Remediation Alternatives* approved by the Regional Water Board, the purpose of assessing health risks from volatile COPCs in indoor air using the groundwater model was to back-calculate groundwater cleanup goals for the Project. As requested by the Regional Water Board, risk-based target groundwater concentrations (i.e., cleanup goals) were estimated based on a cancer risk of 1E-06 (1 in a million) or a hazard quotient of 1.0 for TCE and vinyl chloride. The modeled cleanup goals for TCE and vinyl chloride on the Project site were 59,600 micrograms per liter (µg/L) and 442 µg/L, respectively.

The TCE cleanup goal was several orders of magnitude greater than actual concentrations found in groundwater and was well above a concentration that can reasonably be expected to exist within the VOC plume. The highest vinyl chloride concentration that has been reported beneath the Project site is 96 µg/L, which is below the cleanup goal. Groundwater monitoring data indicates that reductive dechlorination is naturally occurring in the VOC plume, and it is expected to be a major process for contaminant removal over the long-term (10 to 20 years). Therefore, the Regional Water Board is overseeing the use of monitored natural attenuation at the Project site to ensure vinyl chloride concentration are maintained below the site-specific cleanup goal.[83]

Health Risk Summary

As summarized in Table 3.11-2, COPCs in soil would not pose an unacceptable cancer risk or adverse non-cancer risk to groundskeepers (or construction workers) at Parcels 1, 2, 3, and 4. The following risk levels for indoor commercial workers and residents exposed to COPCs in groundwater and/or landfill gas may warrant mitigation:

- Based on landfill gas modeling, under a baseline assumption that soil vapor/landfill gas controls required by 27 CCR 21190 would not be in use, the vapor intrusion of all COPCs (benzene,

[82] Langan Treadwell Rollo. 2015a. *Op. cit.*
[83] Langan Treadwell Rollo. 2015a. *Op. cit.*

ethylbenzene, and vinyl chloride) measured in landfill gas poses a cumulative incremental cancer risk of 5E-06 (5 in a million) for indoor residents on Parcel 4.

- Based on groundwater modeling, under a baseline assumption that soil vapor/landfill gas controls required by 27 CCR 21190 would not be in use, the volatilization and vapor intrusion of all COPCs (TCE and vinyl chloride) measured in groundwater poses a cumulative incremental cancer risk of 1E-06 (1 in a million) for indoor commercial workers and 1E-05 (10 in a million) for indoor residents at the Project site.

Table 3.11-2: Summary of Findings for the Site-Specific Health Risk Analysis

Receptor	Parcel(s)	Impacted Media	Exposure Pathway	Cumulative Incremental Cancer Risk (1E-06)	Hazard Index
Groundskeeper	1, 2, 3, and 4	Soil	Direct Contact	0.1	0.5
Indoor Commercial Workers	1, 2, 3, and 4	Landfill Gas	Inhalation	0.4 to 0.6	0.003 to 0.01
Indoor Commercial Workers	1, 2, 3, and 4	Groundwater	Inhalation	**1**	0.01
Indoor Residents	4	Landfill Gas	Inhalation	**5**	0.1
Indoor Residents	4	Groundwater	Inhalation	**10**	0.1
			Thresholds of Significance:	1	1.0

Source: *Site Investigation and Environmental Risk Assessment* by Langan Treadwell Rollo (2015a).
Notes: Bold font and shaded cells indicate the value exceeds the threshold of significance.
Only complete exposure pathways identified in the risk assessment are presented.

There is some degree of overlap in the health risks estimated by the groundwater and landfill gas models for volatile COPCs in indoor air, because landfill gas samples would include volatile COPCs originating from the groundwater; therefore, the cumulative incremental cancer risks for indoor commercial workers and residents exposed to COPCs in landfill gas and groundwater were reported separately (i.e., not added together). The cancer risks for both of these scenarios are above the Regional Water Board's cancer risk threshold of 1E-06 (1 in a million), which means the potential health risk is a ***significant*** impact and would require mitigation.

The estimated health risks to indoor residents are conservative because they do not take into account the podium structure of the first level of the apartment buildings (where no residential spaces would be located on the first floor). The estimated health risks to indoor residents and commercials workers are also conservative because they do not take into account the operation of the Project's landfill gas collection and removal system or sub-slab landfill gas control systems beneath buildings. These systems would mitigate the potential for vapor intrusion by providing a preferential pathway for any volatile COPCs from landfill gas and groundwater that would otherwise accumulate at sub-slab areas to be conveyed to the LGTE plant and/or vented directly to the atmosphere outside the buildings. Implementation of these Project design features would create incomplete exposure pathways for volatile COPCs to migrate into buildings, which would eliminate associated health risks to indoor commercial workers and residents.

While the landfill gas control systems are included in the Project design and are regulatory requirements for post-closure landfill management under 27 CCR, the design requirements for these systems primarily focus on the mitigation of explosion hazards associated with methane gases and not health risks associated with the inhalation of toxic air contaminants. Since there are no regulatory requirements to design and implement these systems in a manner that addresses the health risks associated with inhalation of toxic air contaminants, the Project could have a ***significant*** impact on the health of residents and commercial workers exposed to volatile COPCs in indoor air.

MITIGATION MEASURES. The City (as owner and operator of the landfill) and the Project Developer shall implement the following measures to reduce significant impacts related to contaminants in the subsurface to a ***less-than-significant*** level.

HAZ-4.1: *Landfill Closure, Monitoring, and Maintenance Plans.* Prior to Project construction, a revised Closure Plan and Post-Closure Maintenance Plan (PCMP) shall be prepared in accordance with the regulatory requirements described in 27 CCR 21790–21840 and submitted to the LEA, CalRecycle, and Regional Water Board (as required) for review and approval. In addition, a PCLUP shall be prepared in accordance with the regulatory requirements described in 27 CCR 21190 and submitted to the LEA and Regional Water Board (as required) for review and approval. Collectively, these plans shall incorporate the requirements of Mitigation Measures HAZ-4.2 through -4.6, below. In addition, the Project Developer shall continue to work with the regulatory agencies (Regional Water Board, LEA, or CalRecycle) and ensure that all elements and measures necessary to ensure that Project-related health risks to residents and commercial workers are mitigated below the Regional Water Board's cumulative incremental cancer risk threshold of 1E-06 and hazard index (HI) (i.e., adverse non-cancer risk) of 1.0 established for the Project.

HAZ-4.2: *Landfill Gas Collection and Removal System.* During Project construction, the existing landfill gas collection and removal system (i.e., wells and conveyance lines) shall be systematically abandoned and replaced in conjunction with the phased Project site development while complying with applicable regulatory requirements that govern the performance of these systems. The new system shall be designed to effectively draw landfill gases (e.g., methane, hydrogen sulfide, and volatile COPCs) away from building sub-slab areas.

The system design shall be submitted to the City for review and approval, taking into account an evaluation of the following criteria: effective vacuum influence (based on pilot testing and pneumatic modeling), vacuum distribution control, oxygen management (for subsurface fire prevention), ease of maintenance, well location, effect of landfill settlement, mitigation of vapor intrusion risk, and the proposed development on the Project site. The system design shall incorporate temperature- and corrosion-resistant materials. The landfill gas collection and removal system shall be designed, operated, and maintained to control excessive gas concentrations as specified in 27 CCR 20939. The monitoring of landfill gases is described under Mitigation Measures HAZ-4.4, below.

HAZ-4.3: *Landfill Gas Protection Systems.* During Project construction, landfill gas protection systems shall be constructed beneath the sub-slabs of structures located on Parcels 1, 2, 3, and 4 to remove landfill gases (e.g., methane, hydrogen sulfide, and volatile COPCs) that could otherwise accumulate and/or migrate through the sub-slab. The systems may include active gas collection or passive ventilation mechanisms and shall meet the minimum design requirements described in 27 CCR 21190. The landfill gas protection systems shall be

designed, operated, and maintained to control excessive gas concentrations as specified in 27 CCR 20939. The monitoring of landfill gases is described under Mitigation Measures HAZ-4.4, below.

HAZ-4.4: *Landfill Gas Monitoring and Control System Maintenance.* During Project construction and operation, a landfill gas monitoring and control program shall be implemented in accordance with 27 CCR 20921-20939. The gas monitoring network shall be designed by a registered civil engineer or a certified engineering geologist and shall ensure detection of the presence of landfill gas migrating beyond the disposal site permitted facility boundary and also into on-site structures. The monitoring network design shall include provisions for monitoring all structures on the Project site, except Parcel 5, including but not limited to, buildings, large subsurface vaults, or any other areas where potential landfill gas buildup may cause adverse impacts on the public health or safety or the environment. Methods for monitoring on-site structures may include, but are not limited to: periodic monitoring, utilizing either permanently installed monitoring probes or gas surveys, and continuous monitoring systems. A methane monitoring system shall be installed inside all buildings on the Project site, except Parcel 5. If methane gas concentrations exceed a threshold of 1.25 percent by volume in air, as described under 27 CCR 20921, the methane monitoring system shall automatically alert the Santa Clara Fire Department, who shall assess the methane conditions and, if necessary, trigger an audible fire alarm to initiate a building evacuation. In the event of an evacuation, the building shall not be reoccupied until the Santa Clara Fire Department has confirmed and approved by that: (1) concentrations of methane meet the applicable compliance requirements and (2) the landfill gas monitoring and control system is operating in a manner that ensures adequate control of methane/vapor intrusion.

The landfill gas control system shall be operated and maintained to control excessive gas concentrations as specified in 27 CCR 20939. This includes operating the landfill gas control system in such a manner as to satisfy the following requirements specified in 27 CCR 20921(a):

- The concentration of methane gas must not exceed 1.25 percent by volume in air within any portion of any on-site structures;
- The concentration of methane gas migrating from the disposal site must not exceed 5 percent by volume in air at the disposal site permitted facility boundary or an alternative boundary approved in accordance with Section 20925; and
- Trace gases shall be controlled to prevent adverse acute and chronic exposure to toxic and/or carcinogenic compounds that could result in a health risk exceedance of the Regional Water Board's cumulative incremental cancer risk threshold of 1E-06 and HI (i.e., adverse non-cancer risk) of 1.0 established for the Project.

In addition to the monitoring and control of excessive gas concentrations to protect public health and safety and the environment, as specified in 27 CCR 20939, the landfill gas monitoring and control program shall incorporate the monitoring and control requirements for preventing subsurface fires that are described under Mitigation Measure HAZ 9.1, below.

HAZ-4.5: *Building Restrictions.* The Project shall prohibit the construction of enclosed basements located over refuse on Parcels 1, 2, 3, and 4 to minimize the risk of landfill gas accumulation. Over the landfill area, the Project shall also limit residential construction to only Parcel 4 areas located over open-air podium level garages or over at least one level of enclosed commercial

space to mitigate vapor intrusion effects by increasing the free flow and exchange of air beneath the residences.

HAZ-4.6: *Landfill Hazards Disclosure.* Information about the existing subsurface hazardous materials conditions and the ongoing mitigation and monitoring requirements described in the PCLUP shall be included in all ground leases and space leases for space located over the Landfill. The text to be inserted shall be subject to review and approval by City.

Impact HAZ-5: Non-Landfill Hazards – Hazardous Materials. Portions of the Project not underlain by refuse contain subsurface materials that would pose a significant hazard to human health. (LTS/M)

Based on the *Technical Memorandum: Parcel 5 Environmental Issues*, soil and soil gases beneath Parcel 5 and the tennis courts located in the southwest portion of Parcel 4 have concentrations of benzo[a]pyrene, PCBs, TPHd, and TPHmo were reported in soil samples at levels exceeding the Regional Water Board's residential and/or commercial/industrial ESLs. Benzene was reported in soil gas samples at concentrations above the residential ESLs, but below the commercial/industrial ESLs. Potential impacts to groundwater have not been investigated at these locations on the Project site. Based on review of regulatory databases, hazardous material releases have not be reported on other portions of the Project site that are not underlain by refuse (e.g., the Eastside Retention Basin) or off-site areas.

The source(s) and extent of soil, soil gas, and potential groundwater impacts have not been fully evaluated. Project construction activities, such as excavation and dewatering, could disturb contaminated soil and/or groundwater beneath the site and pose a potential threat to human health and the environment. Future site users (e.g., residents, commercial workers, maintenance workers) could potentially be exposed to hazardous materials by direct exposure to soils or soil gases that migrate into buildings. If subsurface hazardous materials are not properly managed on Parcel 5 and the southwest portion of Parcel 4 (which are non-landfill areas), development of the Project could have a ***significant*** impact on human health and the environment.

MITIGATION MEASURE. The City and the Project Developer shall implement the following measures to reduce significant impacts related to contaminants in the subsurface on Parcel 5 and the southwest portion of Parcel 4 not underlain by refuse to a ***less-than-significant*** level.

HAZ-5.1: *Phase II Site Investigation*. Prior to Project construction, a Phase II Site Investigation shall be performed on Parcel 5 and the tennis courts located in the southwest portion of Parcel 4 to (1) delineate the extent of soil, soil gas, and potential groundwater contamination on the site and (2) assess potential health risks posed to construction workers and future site users. The Phase II Site Investigation shall be conducted and evaluated by a licensed professional prior to construction and earthwork activities. The findings of the Phase II Site Investigation shall be submitted to the appropriate regulatory agency to the extent required by applicable law. The Project Developer shall conduct any additional investigation and/or risk assessment and/or implement any remedial or risk mitigation measures required by the regulatory agency.

HAZ-5.2: *Soil and Groundwater Management Plan.* Construction on Parcel 5 and the tennis courts located in the southwest portion of Parcel 4 shall be conducted under a site-specific Soil and Groundwater Management Plan (SGMP) to protect construction workers, the general public, and the environment from hazardous materials identified in the Phase II Site Investigation (see Mitigation Measure HAZ-5.1) and potential undocumented sources of such materials. The SGMP shall delineate specific soil and groundwater management and disposal procedures,

construction worker health and safety requirements, and contingency measures in case unknown contamination is encountered during construction. The SGMP shall incorporate the soil and groundwater analytical data from the Phase II Site Investigation to ensure that soil and groundwater are stored, managed, and disposed of in a manner protective of human health and the environment, and in accordance with applicable laws and regulations. The SGMP shall specifically include the following:

- Procedures for evaluating, handling, storing, testing, and disposing of known soil and groundwater contamination identified during the Phase II Site Investigation during Project excavation and dewatering activities, respectively;
- Procedures for identifying, testing, and managing soil and groundwater suspected of containing hazardous materials (if any) that have not previously been identified at the site;
- Descriptions of required worker health and safety provisions for all workers potentially exposed to hazardous materials in accordance with State and federal worker safety regulations; and
- Identification of personnel responsible for implementation of the SGMP.

Impact HAZ-6: Leachate Collection and Removal Systems. Project construction and operation that would disturb the existing leachate collection and removal systems could create a significant impact on groundwater quality. (LTS/M)

Mounding of leachate in the refuse, which can occur due to excessive leachate production and limited recovery, has not been previously observed at the Landfill. Currently, leachate is recovered only from one leachate riser, LR-1, located at Parcel 3. Project development would disturb the operation of the existing LCRSs on Parcel 3 and Parcel 1. The *Draft Technical Memorandum: Leachate Collection and Removal System* prepared by Langan evaluated the potential impacts that Project development could have on the generation of leachate in the landfill and related impacts on groundwater to determine if significant repairs or modifications to the existing LCRSs would be necessary.

For Parcel 1, Langan recommends that the existing LCRS be abandoned because leachate has not developed in this area to the extent that it could be collected from the system and groundwater quality beneath Parcel 1 has not been significantly impacted. For Parcel 3, Langan recommends that the existing LCRS be preserved and used for future leachate recovery by maintaining the operation of riser LR-1 and LR-4. The Project proposes to implement the recommendations from Langan's *Draft Technical Memorandum: Leachate Collection and Removal System* in the PCLUP.

Operation of the Project would substantially reduce leachate production due to the proposed increase in aboveground impervious surfaces (i.e., structural building pads, asphalt roadways, buildings, etc.) and the construction of a stormwater collection system, which would limit infiltration of water into the refuse. By implementing the required PCLUP and increasing the impervious surface area over the landfill, the Project would improve operation of the existing LCRS and reduce leachate production. However, these improvements would occur only if the modified LCRS is properly designed and operated. The Project's proposal to modify the LCRS could result in a ***significant*** impact on groundwater quality.

MITIGATION MEASURES. Compliance with existing regulations and implementation of Mitigation Measure HAZ-6.1 (which requires the implementation of specific LCRS proposed design elements in the *Draft Technical Memorandum: Leachate Collection and Removal System*) would result in the Project having a ***less-than-significant*** impact with mitigation on groundwater quality.

HAZ-6.1: Finalize Draft Technical Memorandum: Leachate Collection and Removal System. Prior to Project construction, a final Technical Memorandum: Leachate Collection and Removal System shall be prepared and implemented as part of the PCLUP. The technical memorandum shall be submitted to the LEA for review and approval and to CalRecycle and the Regional Water Board for review and comment. Specifically, the final technical memorandum shall contain, at a minimum, the following requirements:

- During the construction phase of Parcel 3, the existing leachate collection and removal system (LCRS) risers LR-1 and LR-4 shall be protected and preserved during construction by flagging the well head locations, extending the risers, and installing a bollard around each riser.
- If LR-1 or LR-4 are damaged during construction, repairs and modifications shall be completed promptly.
- LR-1 and LR-4 shall be supported and anchored to prevent potential settlement over time and finished to grade at the end of excavation and/or completion of construction.
- Ongoing operation and maintenance of the leachate recovery system shall continue during and after Project construction. The LCRS monitoring shall continue in accordance with the Regional Water Board's WDR Order No. R2-2002-0008 for the site, which shall be revised to consider the proposed development and modifications to the landfill systems.

Impact HAZ-7: Aviation Hazard. The Project would not create a potentially significant aviation hazard to nearby public-use airports. (LTS)

Development near airports can pose a potential hazard to people and property on the ground, as well as create obstructions and other hazards to flight. The Norman Y. Mineta San José International Airport is located about 2.8 miles southeast of the Project site. Parcels 3, 4, and 5 on the Project site are located within an Airport Influence Area due to height restrictions established by FAR Part 77. The proposed buildings for the Project could be constructed up to a maximum height of 17 stories, or about 190 feet above the finished grade of the on-site streets. The maximum potential elevation of proposed construction would be about 219 feet above mean sea level (msl). Because the most conservative height restriction on the Project site is about 330 feet msl on the southern portions of Parcels 4 and all of Parcel 5, Project structures would not be expected to obstruct navigable airspace associated with the Norman Y. Mineta San José International Airport. Therefore the Project would have a ***less-than-significant*** impact related to aviation hazards at public-use airports.

Impact HAZ-8: Impairment of Emergency Access or Emergency Plans. The Project would not impair implementation of or physically interfere with an adopted emergency response plan or emergency evacuation plan. (LTS)

The City of Santa Clara has adopted a Local Hazard Mitigation Plan. As described in the adopted plan, the SCFD is responsible for coordinating emergency response and evacuation procedures in the event of a major disaster within the City of Santa Clara. Emergency access and evacuation routes to and from the Project site would be available along the adjacent State Route 237, Great America Parkway, and Tasman

Drive. While the Project would increase the amount of traffic in the Project vicinity, it would not be expected to interfere with emergency response and evacuation procedures described in the adopted plan. Therefore, the Project would have a ***less-than-significant*** impact on emergency response or evacuation plans.

Impact HAZ-9: Landfill Hazards – Subsurface Fires. The Project is located on a landfill where a subsurface fire resulting from the heating of waste materials could pose a significant risk of loss, injury, or death. (LTS/M)

Parcels 1, 2, 3, and 4 are located on a closed landfill where aerobic decomposition or chemical oxidation of waste materials could result in a subsurface fire that could pose a potentially significant impact to human health and property. Landfill fires threaten the environment through toxic pollutants emitted into the air, water, and soil. These fires also pose a risk to firefighters and the public who are exposed to the hazardous chemical compounds they emit. Subsurface fires can result in rapid ground settlement (e.g., sink holes), which can pose a risk to the safety of people and integrity of overlying structures. The degree of risk depends in part on the contents buried in the landfill, the geography of the landfill, and the nature of the fire. Detection and extinguishing landfill fires can be very difficult and these fires often smolder for weeks under the surface of the landfill before being discovered.

Under BAAQMD Regulation 8, Rule 34, wellheads for the landfill gas collection and removal system at the Project site must be sampled monthly for vacuum pressure, temperature, and either oxygen or nitrogen. These parameters can be useful for indicating potential subsurface fire events; however, neither the BAAQMD nor other regulatory agencies specifically require monitoring and prevention of subsurface fire events at closed landfills. The following regulatory guidance documents describe best management practices for preventing, detecting, and suppressing subsurface fires at landfills:

- EPA's (1999) Municipal Solid Waste Landfills, Volume 1: Summary Requirements for the New Source Performance Standards and Emission Guidelines for Municipal Solid Waste Landfills;
- Ohio Environmental Protection Agency's (2011) Subsurface Heating Events at Solid Waste and Construction and Demolition Debris Landfills: Best Management Practices; and
- CalRecycle's (2006) Landfill Fires Guidance Document.

Current fire prevention measures at Parcels 1, 2, 3, and 4, which include the flaring of landfill gas when the electrical conversion micro-turbines are offline and the removal of accessible surface vegetation, would not completely protect future Project site workers, residents, and shoppers from potential landfill fires. Therefore, the Project could have a ***significant*** impact related to surface fires and would require mitigation.

MITIGATION MEASURES. Implementation of Mitigation Measures HAZ-9.1 through HAZ-9.3 would reduce impacts related to subsurface fires to a ***less-than-significant*** level.

HAZ-9.1: *Subsurface Fire Prevention, Detection, and Response Plan.* Prior to construction, a Subsurface Fire Prevention, Detection, and Response Plan shall be prepared that describes how subsurface heating conditions above the landfill will be monitored, prevented, and suppressed. The plan, which may be included as part of a larger planning document, shall identify responsible parties and schedules for implementing the measures described in the plan. The Project Developer shall submit the plan to the LEA, CalRecycle, and SCFD for review and comment. Responses to comments shall be incorporated into a final Subsurface Fire Prevention, Detection, and Response Plan from the regulatory agencies. The plan shall also

incorporate the prevention, detection, and response actions described under Mitigations HAZ-9.2 and HAZ-9.3, below, unless alternative actions are approved by LEA, CalRecycle, and SCFD. The final plan shall be implemented during Project construction and operation.

HAZ-9.2: *Subsurface Fire Prevention and Detection Measures.* The following measures may be included in whole, or in part, in the Subsurface Fire Prevention, Detection, and Response Plan, as required by the LEA, CalRecycle, and SCFD. In addition, these agencies may require additional measures.

The landfill gas collection system shall be monitored and maintained to minimize the intrusion of oxygen (i.e., air) into the landfill and prevent the overheating of waste due to aerobic decomposition. In accordance with BAAQMD monitoring requirements (Regulation 8-34), the gauge pressure, nitrogen or oxygen concentration, and temperature of landfill gas within each extraction wellhead shall be monitored once a month and evaluated to ensure the system is not overdrawing air into the landfill. The nitrogen and oxygen concentrations may be measured using a calibrated portable instrument. The landfill gas measured at each extraction well head must meet the following monitoring threshold requirements:

- Nitrogen concentrations less than 20 percent or oxygen levels less than 5 percent; and
- Maximum temperature of 140 degrees Fahrenheit.

The nitrogen and oxygen thresholds shall be used to indicate if the gas collection system is overdrawing and causing excessive ambient air infiltration into the landfill through its surface and sides. An exceedance of the maximum temperature threshold shall indicate that a subsurface fire may exist. Other evidence of a potential subsurface fire shall include the following:

- Observations of rapid settlement over a short period of time;
- Smoke or smoldering odor emanating from the gas extraction system or landfill; or
- Combustion residue in extraction wells and/or headers.

The landfill gas collection system shall be adjusted to reduce well extraction rates (if necessary) to ensure the monitoring thresholds for nitrogen/oxygen and temperature are not exceeded, while continuing to ensure the control of other excessive gas concentrations in the landfill (e.g., methane and trace gases) as specified in 27 CCR 20939. In the event that one or both of the monitoring thresholds are exceeded or other evidence of a potential subsurface fire is observed, then gas samples shall be collected from the extraction wells in the affected area and submitted to a certified laboratory for analysis of nitrogen, oxygen, and carbon monoxide. Analytical results for nitrogen and oxygen that exceed the monitoring thresholds shall be used as confirmation that an aerobic environment is present. Analytical results for carbon monoxide that exceed 1,000 parts per million shall be used as confirmation that a subsurface fire exists.

HAZ-9.3: *Subsurface Fire Suppression.* If a subsurface fire condition has been confirmed (i.e., carbon monoxide level exceed 1,000 parts per million), the LEA, CalRecycle, and SCFD shall be notified immediately. The extraction wells surrounding the subsurface fire shall be shut down temporarily to reduce oxygen levels. The extraction wells shall then be returned to active use in stages in conjunction with monitoring to determine if the subsurface fire has been suppressed. If shutting down the extraction wells does not suppress the fire and/or results in

the excess accumulation of methane and other trace gases beneath structures, then a Class A foam or wetting agent shall be injected into the affected area. These chemicals include a surfactant that reduces surface tension and improves penetration depth. Large amounts of water shall not be used, because water can exacerbate the fire potential, generate contaminated runoff, increase leachate, and cause slope failure.

Cumulative

The geographic context for the analysis of cumulative impacts associated with hazards and hazardous materials varies, depending on the topic. The projects considered in this cumulative analysis are primarily those discussed in Section 3.0, *Environmental Impact Analysis.* However, the analysis below considers, in general terms, impacts that could cumulate from projects outside the geographic area illustrated in Figure 3.0-1. For disposal and transport of hazardous materials, the geographic context would include the area between where hazardous waste is generated and where it is disposed of as well as the route between a distribution facility and the Project area where risk of upset and accident would occur. The cumulative context for impacts associated with contaminated groundwater would include projects in the Santa Clara Basin watershed. The context for analysis of contaminated soil and risk from hazardous materials in buildings is site specific. For the discussion of airport hazards, the geographic context would be the airport influence area of SJC. The cumulative context for impact associated with the impairment of emergency access or emergency plans would include projects within a 1-mile radius from the Project site.

Cumulative impacts are addressed only for those thresholds that would result in a Project-related impact, whether it be less than significant, significant, or significant and unavoidable. If the Project would result in no impact with respect to a particular threshold, it would not contribute to a cumulative impact. Therefore, no analysis would be required.

The Project would have no impact related to aviation hazards for private airstrip operations or wildland fire hazards; therefore, these topics are not analyzed for cumulative impacts.

This cumulative analysis examines the effects of the Project in the relevant geographic area in combination with other current projects, probable future projects, and projected future growth.

Impact C-HAZ-1: Cumulative Hazards and Hazardous Materials Impacts. The Project, in combination with other foreseeable development in the vicinity, would not have a significant cumulative impact from hazardous materials use, soil and groundwater contamination, hazardous materials in building components, landfill siting hazards, aviation hazards, or impairment of emergency access or emergency plans. This cumulative impact would be less than significant. (LTS/M)

Routine Hazardous Materials Use

The other current projects are a combination of residential, retail/commercial, hotel, office/R&D, industrial, and institutional uses. The types and amounts of hazardous materials present at any one time in these uses would typically be limited to household-type products, with the exception of the R&D and industrial uses. The R&D and industrial uses would most likely involve greater amounts of hazardous materials such as solvents, flammable materials, and compressed gases, along with other chemicals used in manufacturing and processing. R&D and industrial land uses may also generate hazardous materials waste.

Although existing, proposed, and reasonably foreseeable development could have potentially unique hazardous materials considerations, all such existing and potential users would comply with the range of federal, State, and local statutes and regulations applicable to the use, transport, and disposal of hazardous materials and would be required to comply with existing and future programs of enforcement by the appropriate regulatory agencies, which are described in the *Regulatory Setting*. Compliance with these federal, State, and local laws and regulations pertaining to hazardous materials would be adequate with respect to minimizing health and safety risks because these laws and regulations have been designed to protect health and safety and are enforced by State and local agencies. In addition, stringent federal and State regulatory requirements apply to the common carriers that would handle the delivery and transport of hazardous materials to and from locations where hazardous materials are used. Although these regulations do not eliminate the potential for accidents and spills, they would reduce the frequency of possible occurrences and limit the number of people who could be exposed. Therefore, the cumulative impact with regard to routine use, transport, disposal, and handling of hazardous materials would be ***less than significant***.

Soil and Groundwater Contamination

For projects in the City and Santa Clara Basin watershed that involve development or redevelopment of an existing site where soil or groundwater contamination may have occurred, the potential exists for a release of hazardous materials during construction and/or remediation of those sites. For individuals who are not involved in construction activities, the greatest potential source of exposure to contaminants is airborne emissions, primarily through construction-generated dust. Other potential pathways, such as direct contact with contaminated soils or groundwater, would not pose as great a risk to the public because such exposure scenarios would typically be confined to the construction zones.

Assuming that site-specific risk management controls are implemented and compliance with applicable laws and regulations pertaining to site cleanup and hazardous materials management is achieved at all other locations, soil or water contamination in the identified geographic context would not be expected to result in significant cumulative impacts. For the Project, the primary concern regarding hazardous materials is in regard to construction over the existing landfill. As described above under Impacts HAZ-2 and HAZ-4, Mitigation Measure HAZ-2.1 is required to manage construction-period exposure risks, and Mitigation Measures HAZ-4.1 through 4.6 are required to manage operational exposure risks. Mitigation Measure HAZ-6.1 is also required to manage the leachate recovery system. No other projects would result in impacts related to the landfill or risks to future on-site residential and commercial receptors. Therefore, this is a Project impact only (which would be reduced to a less-than-significant level by the mitigation noted above), and is not a cumulative impact. Therefore, the cumulative impact with regard to soil and groundwater contamination would be ***less than significant***.

Hazardous Materials in Building Components

It is reasonable to assume that development of other current projects could involve demolition of existing structures or renovation and rehabilitation of others. If buildings with asbestos, LBP, PCBs, or other hazardous materials are demolished, each project would be required to comply with applicable federal, State, and local regulations, which are explained in the *Regulatory Setting* section, above. Prior to issuance of a demolition permit, the governing municipality would be responsible for ensuring that the necessary investigations and remediation have been completed.

Hazardous materials incidents associated with demolition activities where asbestos, LBP, PCBs, or other hazardous materials could be released are site specific. As a result, associated health and safety risks

would be limited to those individuals who use the materials or to persons in the immediate vicinity of the materials. Further, the likelihood of multiple incidents occurring concurrently and resulting in a cumulative impact would be minimal. Therefore, the cumulative impact with regard to hazardous building materials would be ***less than significant***.

Landfill Siting Hazards

No other current project within the City and in adjacent cities considered in Figure 3.0-1 would be sited on a closed landfill, which is inherently a hazardous materials site. Because of the siting of the Project on a closed landfill, unique hazards are present that are not typical of development or redevelopment in an infill setting. There would be no significant cumulative impact with respect to landfill siting hazards because the Project's site-specific impacts would be addressed through compliance with City and State regulations and Project mitigation measures. Thus, the cumulative impact regarding landfill siting hazards would be ***less than significant***.

Aviation Hazards

There are seven projects located within the Airport Influence Area of SJC. As shown in Figure 3.0-1, these projects include 2350 Mission College Boulevard (11), 3Com/Cognac Great America (12), Intel SC-13 (14), Mission College Master Plan (16), Sobrato Office Development (19), Tasman East (20), and Yahoo! (21). Development near airports can pose a potential hazard to people and property on the ground and create obstructions and other hazards to flight. Development within the Airport Influence Area is subject to height restrictions established by FAR Part 77. These height restrictions are designed to protect navigable airspace around an airport. All development within the Airport Influence Area would also be required to comply with FAA Part 77 height restrictions. Therefore, the cumulative impact regarding aviation hazards would be ***less than significant***.

Impacts related to the exposure of people to noise from the Project site being located within the SJC Comprehensive Land Use Plan (CLUP) are addressed in Impact NOI-5 in Section 3.6, *Noise*.

Impairment of Emergency Access of Emergency Plan Impacts

There are 13 projects located within a 1-mile radius of the Project site, as noted above and shown in Figure 3.0-1. Other development would result in increased traffic throughout the City. Emergency provider's response times could be significantly affected because of congestion at intersections, particularly for those projects that are farther away from fire and police stations.

Because details regarding the site plans for the majority of the other current projects are unknown, it is possible that emergency access to these sites could be affected. Certain design features for the other projects would be required to ensure that adequate emergency access to/from the sites would be maintained. During the design review process of the projects, the governing municipality would be expected to require appropriate measures to ensure that emergency access would not be impeded and that the developments would include adequate emergency access to the site. Although adequate emergency access to the site is required, there is no certainty in implementation that emergency access will not be impeded. For these reasons, the cumulative effects of development in the region and impacts from the impairment of emergency access and emergency plans are considered significant.

The Project would remain in proximity to existing Fire Station 10. Existing traffic preemption devices would ensure that response times would not be affected significantly. As explained in Chapter 2, *Project Description*, adequate emergency access would be provided at all proposed access points and driveways.

With traffic preemption devices located throughout the City and in the surrounding region and adequate emergency access to the Project site maintained, implementation of the Project would not impede emergency access routes, and existing City thoroughfares would continue to be maintained. The Project would not result in permanent road closures that would physically interfere with the City's Local Hazard Mitigation Plan. The Project would result in a less than cumulatively considerable contribution to this impact and impacts are ***less than significant***.

This Page Intentionally Left Blank

3.12 Population and Housing

This section provides background information on existing and projected population, employment, and housing conditions in the City of Santa Clara (City) and estimates changes to the City's demographics that would result from the City Place Santa Clara Project (Project). The analysis is based on population, employment, and housing data published in Projections 2013 by the Association of Bay Area Governments (ABAG)[1] and other demographic information from the Demographic Research Unit of the California Department of Finance (DOF) and the United States Census Bureau. In addition, relevant data and policies of the Housing Element in the *City of Santa Clara 2010–2035 General Plan* (General Plan) are considered in this analysis.

The purpose of this section is to characterize the potential for Project-induced population, housing, and employment changes that may trigger physical environmental effects; these potential environmental impacts are examined in other sections of this Draft EIR (for example, Sections 3.3, *Transportation*; 3.4, *Air Quality*; 3.6, *Noise*; 3.13, *Public Services*; and 3.14, *Utilities and Service Systems,* and Chapter 4, *Other CEQA Considerations*).

Issues identified in response to the Notices of Preparation (NOPs) (Appendix 1) were considered in preparing this analysis. The City received three NOP comments relating to Population and Housing. The NOP comments pertained to the possibility of increasing the number of residential units, increasing the share of low-income housing units, and the jobs/housing balance.

Existing Conditions

Regulatory Setting

State

Sustainable Communities Strategy and SB 375. Senate Bill (SB) 375, adopted in 2008, requires preparation of a Sustainable Communities Strategy (SCS) as part of the Regional Transportation Plan (RTP) for the Bay Area. Plan Bay Area, the SCS for the region, was jointly approved in July 2013 by ABAG and the Metropolitan Transportation Commission (MTC).[2] The Plan represents a transportation and land use/housing strategy for how the Bay Area will address its transportation mobility and accessibility needs, land development, and greenhouse gas emissions reduction requirements through the year 2040.

In the Bay Area, the SCS and the Regional Housing Needs Allocation (RHNA) methodology are mutually reinforcing and were developed together to meet the overlapping objectives of SB 375 and Housing Element Law. These objectives include increasing the supply, diversity, and affordability of housing; promoting infill development and a more efficient land use pattern; promoting an improved intraregional relationship between job and housing; protecting environmental resources; and promoting socioeconomic equity. SB 375 requires that the RHNA be consistent with the SCS and

[1] ABAG data presented in Projections 2013 is a function of the following four elements: (1) ABAG Executive Board policies, which are based on the Smart Growth Vision; (2) General Plan policies for each particular jurisdiction; (3) economic trends; and (4) available land and prevailing land use pattern data, which are based on discussions between ABAG staff and planning staff in each particular jurisdiction.

[2] MTC is the government agency responsible for regional transportation planning, financing, and coordinating transportation services in the nine-county San Francisco Bay Area.

establishes an 8-year cycle for RHNA. The 2014–2022 RHNA has been incorporated into the Plan Bay Area.[3]

The Project site is assumed to operate as a golf course through 2035 and, therefore, is not part of the planned development considered in the City's General Plan. Likewise, the Project is not a reasonably foreseeable project considered as part of Plan Bay Area, and the Project's growth is not anticipated or accounted for in regional planning efforts. The Project's contribution to population growth in the City and surrounding region, and whether this growth is within forecasts, is discussed in Impact POP-1 below.

Housing Element Law. The RHNA is a process established under the State Housing Element law that requires cities in California to plan for the future development of new housing units to meet their share of their regional housing needs. Housing needs for each region in the State are determined by the State Department of Housing and Community Development (HCD) and submitted to Councils of Government for allocation to local jurisdictions. ABAG is ultimately responsible for determining the share of regional housing needs to be met by each city in the San Francisco Bay Area (Bay Area). State housing law has established three housing affordability categories. The categories are based on the region's median income, taking into account households ranging in size from one to six people. These three affordability categories are used by ABAG in allocating regional housing needs.

- Very Low 0 to 50 percent of the area's median income
- Low 50 to 80 percent of the area's median income
- Moderate 80 to 120 percent of the area's median income

Currently the existing RHNA identifies allocated housing units for the 2014 to 2022 period (Table 3.12-1). ABAG identified 4,093 units (defined by income category) as the City's fair share of the regional housing need for the 2014 to 2022 period (Table 3.12-1).[4]

Table 3.12-1. ABAG Regional Housing Need Allocation for 2014–2022 (Units)

Income Level	City Need	County Need	Regional Need
Very Low	1,050	16,158	46,680
Low	695	9,542	28,940
Moderate	755	10,636	33,420
Subtotal of Affordable Units	*2,500*	*36,336*	*109,040*
Above Moderate[a]	1,593	22,500	78,950
Total	**4,093**	**58,836**	**187,990**

Source: Association of Bay Area Governments (ABAG). 2013. Regional Housing Need Plan for the San Francisco Bay Area: 2014–2022. Adopted July 18, 2013.

Notes:

[a] Above Moderate: Households with incomes greater than 120 percent of County median family income. ABAG does not use the Above Moderate category. This category is included in the RHNA and in the analysis below to provide decision makers with more information on the housing impacts for a broad spectrum of the new worker households associated with the Project.

[3] Association of Bay Area Governments and Metropolitan Transportation Commission. 2013. Plan Bay Area: Strategy for a Sustainable Region. Adopted July 18, 2013.

[4] Association of Bay Area Governments (ABAG). 2013. Regional Housing Need Plan for the San Francisco Bay Area: 2014-2022. Adopted July 18, 2013.

Local

City of Santa Clara General Plan. All California cities and counties are required to have a Housing Element included in their General Plan that establishes housing objectives, policies, and programs in response to community housing conditions and needs. The Housing Element also provides a framework for the community's longer-term approach to addressing its housing needs.[5] The following goals and policies from the Housing Element would be applicable to the Project.

> **Goal B.** Manage growth in the City by designating suitable vacant or underutilized sites for new residential development and ensuring compatibility with community goals and existing neighborhoods.
>
> *Policy B-2*. Encourage the building of higher density housing on appropriate vacant or underutilized sites.
>
> *Policy B-4.* Promote compatibility between neighborhoods while respecting differences in neighborhood character.
>
> *Policy B-5*. Work towards the mitigation of jobs/housing ratio impacts created by developments with significant employment.
>
> *Policy B-6*. Encourage higher density residential development in transit-oriented and mixed use areas where appropriate.

Environmental Setting

Population

The City is located in the northwestern portion of Santa Clara County (County). The City encompasses approximately 18.4 square miles, and the U.S. Census Bureau estimated the City's population to be approximately 119,075 in 2013.[6] Table 3.12-2 presents ABAG population estimates and projections for years 2015 through 2040 for the City, County, and the Bay Area (Marin, Sonoma, Napa, Solano, Contra Costa, Alameda, Santa Clara, San Mateo, and San Francisco Counties).

Table 3.12-2. Population Trends in the City, County, and the Bay Area, 2015–2040 (Total Number of Persons)

	2015	2020	2030	2040	Growth 2015–2040
City	122,500	128,700	141,700	156,500	34,000 (27.8%)
County	1,877,700	1,977,900	2,188,500	2,423,500	545,800 (29.1%)
Bay Area	7,461,400	7,786,800	8,496,800	9,299,100	1,837,700 (24.6%)

Source: Association of Bay Area Governments (ABAG). Projections 2013. December 2013.

[5] City of Santa Clara. 2014. "2015-2023 City of Santa Clara Housing Element." Adopted December 9, 2014. Available at: <http://santaclaraca.gov/index.aspx?page=2828>. Accessed on December 24, 2014.

[6] U.S. Census Bureau. 2013. American Fact Finder, American Community Survey (ACS). 2011-2013 2011-2013 ACS 3-Year Estimates. "ACS Demographic and Housing Estimates, Santa Clara City, California." ID DP05. Available: <http://factfinder.census.gov/faces/nav/jsf/pages/searchresults.xhtml?refresh=t>. Accessed October 27, 2014.

The data indicate that the population growth from 2015 to 2040 in the City (approximately 27.8 percent) and in the Bay Area as a whole (about 24.6 percent) would be slightly less than the County (approximately 29.1 percent).[7]

Housing

The U.S. Census Bureau defines a *household* as a person or group of persons living in a housing unit, as opposed to persons living in group quarters, such as dormitories, convalescent homes, or prisons. The estimated number of households in the City as in January 2013 was approximately 45,035, with an average household size of about 2.64 persons per household (pph).[8] The City had a housing unit vacancy rate of approximately 4.9 percent in 2013.[9] The County's worker per household ratio was about 1.39.[10,11]

Table 3.12-3 presents ABAG projections for households in the Bay Area, the County, and the City (sphere of influence[12]) for years 2015 through 2040. According to ABAG, the number of households in the County is projected to grow from approximately 639,160 units in 2015 to approximately 818,400 in 2040, an increase of approximately 28.0 percent. The number of households in the City is projected to grow from approximately 45,350 units in 2015 to about 57,260 in 2040, an increase of approximately 26.3 percent. Overall, the household growth rate in the City (approximately 26.3 percent) is expected to be slightly below the household growth rate for the County (approximately 28.0 percent), but higher than the Bay Area household growth (approximately 21.6 percent).

Table 3.12-3. Household Trends in the City, County, and the Bay Area, 2015–2040 (Total Number of Households)

	2015	2020	2030	2040	Growth (2015–2040)
City	45,350	47,760	52,490	57,260	11,910 (26.3%)
County	639,160	675,670	747,070	818,400	179,240 (28.0%)
Bay Area	2,720,410	2,837,680	3,072,920	3,308,090	587,680 (21.6%)

Source: Association of Bay Area Governments (ABAG). Projections 2013. December 2013.

[7] Growth rates = (Population in 2040 – Population in 2015)/Population in 2015 * 100

[8] U.S. Census Bureau. 2013. American Fact Finder, American Community Survey (ACS) 2011-2013 ACS 3-Year Estimates. "ACS Demographic and Housing Estimates, Santa Clara City, California." ID DP05. Available: <http://factfinder.census.gov/faces/nav/jsf/pages/searchresults.xhtml?refresh=t>. Accessed October 27, 2014.

[9] U.S. Census Bureau. 2013. American Fact Finder, American Community Survey (ACS). 2011-2013 ACS 3-Year Estimates. "Vacancy Status, Santa Clara City, California." ID DP04. Available at: <factfinder2.census.gov/faces/nav/jsf/pages/searchresults.xhtml?refresh=t>. Accessed on October 27, 2014.

[10] The Santa Clara County average of 1.39 workers per worker household is used in this analysis because new workers would be more similar to the County as a whole than the smaller City of Santa Clara profile.

[11] U.S. Census Bureau. 2013. American Fact Finder, American Community Survey (ACS). 2011-2013 ACS 3-Year Estimates. "Selected Characteristics of the Native and Foreign-born Populations." Santa Clara County, California. ID S0501. Available: <http://factfinder.census.gov/faces/nav/jsf/pages/searchresults.xhtml?refresh=t>. Accessed October 27, 2014.

[12] In California, *sphere of influenc*e has a legal meaning as a plan for the probable physical boundaries and service area of a local agency. Spheres of influence at California local agencies are regulated by Local Agency Formation Commissions (LAFCO) that recognize the unincorporated communities that would be best and most likely served by the city agencies. Hence, the spheres of influence represent areas with the greatest potential for annexation by the city. In most cases, ABAG provides more detailed demographic and employment projections for a city's sphere of influence. Consequently, unless otherwise specifically noted, all City data represents the City sphere of influence since only limited demographic data is available for the City's incorporated area.

Employment

The employment profile for an area provides an indication of the composition of an area's economy and the present and future demand for employees. Approximately 68.3 percent of the City's residents age 16 and older were in the work force in 2013,[13] which is similar to the County rate (approximately 67.1 percent)[14] and around five percent higher than the State rate (approximately 63.8 percent).[15] Most City residents who are in the workforce (approximately 54.8 percent) are in management, business, science, and arts occupations,[16] which is more than the rate for these occupations in the County (approximately 49.6 percent)[17] or the State (approximately 36.8 percent).[18] According to the U.S. Census Bureau's employment industry analysis, the next most common employment category in the City was sales and office occupations (approximately 20.0 percent), followed by service occupations (approximately 13.6 percent). Production, transportation, and material moving (approximately 6.7 percent) and natural resources, construction, and maintenance occupations (approximately 4.9 percent) round out the City's occupation profile.[19]

The City's top employers are dominated by high-tech manufacturing companies. The City and the County were negatively affected by the economic downturn of the dot-com industry and again more recently by the housing mortgage/financial crises.[20] Nonetheless, steady employment growth is expected between 2015 and 2040. The following tables present ABAG's employment projections. The U.S. Census Bureau estimates there were 101,130 jobs in the City in 2013.[21] However, since the U.S. Census Bureau does not provide projections, Table 3.12-4 presents only ABAG employment projections for the City, the County, and the Bay Area.

---

[13] U.S. Census Bureau, American Fact Finder, American Community Survey (ACS). 2013. "Selected Economic Characteristics, Santa Clara City, California." 2011-2013 ACS 3-Year Estimates. ID DP03. Available at: <factfinder2.census.gov/faces/nav/jsf/pages/searchresults.xhtml?refresh=t>. Accessed on October 27, 2014.

[14] U.S. Census Bureau, American Fact Finder, American Community Survey (ACS). 2013. "Selected Economic Characteristics, Santa Clara County, California." 2011-2013 ACS 3-Year Estimates, ID DP03. Available at: <factfinder2.census.gov/faces/nav/jsf/pages/searchresults.xhtml?refresh=t>. Accessed on October 27, 2014.

[15] U.S. Census Bureau, American Fact Finder, American Community Survey (ACS). 2013. "Selected Economic Characteristics, State of California." 2011-2013 ACS 3-Year Estimates, ID DP03. Available at: <factfinder2.census.gov/faces/nav/jsf/pages/searchresults.xhtml?refresh=t>. Accessed on October 27, 2014.

[16] U.S. Census Bureau, American Fact Finder, American Community Survey (ACS). 2013. "Selected Economic Characteristics, Santa Clara City, California." 2011-2013 ACS 3-Year Estimates, ID DP03. Available at: <factfinder2.census.gov/faces/nav/jsf/pages/searchresults.xhtml?refresh=t>. Accessed on October 27, 2014.

[17] U.S. Census Bureau, American Fact Finder, American Community Survey (ACS). 2013. "Selected Economic Characteristics, Santa Clara County, California." 2011-2013 ACS 3-Year Estimates, ID DP03. Available at: <factfinder2.census.gov/faces/nav/jsf/pages/searchresults.xhtml?refresh=t>. Accessed on October 27, 2014.

[18] U.S. Census Bureau, American Fact Finder, American Community Survey (ACS). 2013. "Selected Economic Characteristics, State of California." 2011-2013 ACS 3-Year Estimates, ID DP03. Available at: <factfinder2.census.gov/faces/nav/jsf/pages/searchresults.xhtml?refresh=t>. Accessed on October 27, 2014.

[19] U.S. Census Bureau, American Fact Finder, American Community Survey (ACS). 2013. "Selected Economic Characteristics, Santa Clara City, California." 2011-2013 ACS 3-Year Estimates, ID DP03. Available at: <factfinder2.census.gov/faces/nav/jsf/pages/searchresults.xhtml?refresh=t>. Accessed October 27, 2014.

[20] City of Santa Clara. 2014. "2015-2023 City of Santa Clara Housing Element." Adopted December 9, 2014. Available at: <http://santaclaraca.gov/index.aspx?page=2828>. Accessed on December 24, 2014.

[21] U.S. Census Bureau, American Fact Finder, American Community Survey (ACS). 2013. "Sex of Workers by Travel Time to Work for Workplace Geography, Santa Clara City, California." 2011-2013 ACS 3-Year Estimates. ID B08412. Available at: <factfinder2.census.gov/faces/nav/jsf/pages/searchresults.xhtml?refresh=t>. Accessed on December 4, 2014.

Table 3.12-4. Employment Trends in the City, County, and the Bay Area, 2015–2040 (Total Number of Jobs)

	2015	2020	2030	2040	Growth (2015–2040)
City	121,950	131,960	137,480	146,180	24,230 (19.9%)
County	1,003,780	1,091,270	1,147,020	1,229,520	225,740 (22.5%)
Bay Area	3,669,990	3,987,150	4,196,580	4,505,230	835,240 (22.8%)

Source: Association of Bay Area Governments (ABAG). Projections 2013. December 2013.

As indicated in Table 3.12-4, the ABAG projections from 2015 to 2040 show a steady increase in employment in the Bay Area and the County (about 22.8 percent and 22.5 percent, respectively). The City shows slightly lower rates of employment growth (approximately 19.9 percent) than the Bay Area and County projections. These three projections of increasing employment suggest a need for housing to serve a growing and diverse workforce.[22]

Table 3.12-5 presents a comparison of the projected total jobs available in the City to the projected number of employed residents within the City. According to ABAG's Projections, the number of employed residents in the City would be equal to approximately 51.5 percent of the available jobs in the City in 2040.

Table 3.12-5. Comparison of Number of Jobs to Employed Residents in City

	2015	2020	2030	2040
Jobs[a]	121,950	131,960	137,480	146,180
Employed Residents[a]	58,730	64,440	69,020	75,230
Employed Residents to Total Number of Jobs (%)	48.2	48.8	50.2	51.5

Source: Association of Bay Area Governments (ABAG). Projections 2013. December 2013.
Note:
a. Jobs and employed residents are based on the City's sphere of influence, which also includes unincorporated areas of Santa Clara County.

Santa Clara can be characterized as a "job rich" community, where the number of jobs has well exceeded the number of housing units. This leads to a greater demand for housing and, in turn, higher prices for both rental and owner-occupied houses. According to the City's Housing Element, for all income groups, except for larger moderate income households and above moderate income households, current market prices present a serious obstacle to single-family homeownership.[23] Therefore, because the City's housing prices are high, many people who work in the City cannot afford to live there. Consequently,

[22] City of Santa Clara. 2014. "2015-2023 City of Santa Clara Housing Element." Adopted December 9, 2014. Available at: <http://santaclaraca.gov/index.aspx?page=2828>. Accessed on December 24, 2014.

[23] City of Santa Clara. 2014. "2015-2023 City of Santa Clara Housing Element." Adopted December 9, 2014. Available at: <http://santaclaraca.gov/index.aspx?page=2828>. Accessed on December 24, 2014.

people who work in the community often must commute long distances. Approximately 13.5 percent of the people who currently work in the City also live in the City per U.S. Census data.[24,25,26,27]

At the Project site, the Santa Clara Golf & Tennis Club, BMX track, and fire station currently employ a total of 35 people. Three existing off-site office buildings in Tasman East industrial/office development would be demolished to accommodate the proposed Lick Mill Boulevard extension. It is estimated that there are approximately 475 workers employed at these office buildings; therefore, construction of the Project would displace a total of approximately 510 current employees.

Environmental Impacts

This section describes the impact analysis related to population and housing for the Project. It describes the methods used to determine the impacts of the Project and lists the thresholds used to measure whether an impact would be significant. Measures to mitigate (i.e., avoid, minimize, rectify, reduce, eliminate, or compensate for) significant impacts accompany each impact discussion, as necessary.

Thresholds of Significance

In accordance with Appendix G of the State CEQA Guidelines, the Project would be considered to have a significant effect if it would result in any of the conditions listed below.

- Induce substantial population growth in an area, either directly (e.g., by proposing new homes and businesses) or indirectly (e.g., through extension of roads or other infrastructure).
- Displace a substantial number of existing housing units, necessitating the construction of replacement housing elsewhere.
- Displace a substantial number of people, necessitating the construction of replacement housing elsewhere.

Methods for Analysis

This analysis considers whether substantial population and household growth would occur with implementation of the Project and whether this growth is within forecasts for the City and/or can be considered substantial with respect to remaining growth potential in the City. This section uses ABAG's projections to analyze the Project's impacts.

---

[24] 15,353 employees who both live and work in Santa Clara – 2,010 employees who work from home = 13,343 Santa Clara residents who both live and work in the City. 13,343 Santa Clara residents who both live and work in the City / 99,120 employees in Santa Clara = 13.5 percent of Santa Clara residents who also work in the City.

[25] U.S. Census Bureau, American Fact Finder, American Community Survey (ACS). 2013. "Sex of Workers by Place of Work—Place Level, Santa Clara City, California." 2011-2013 ACS 3-Year Estimates, ID B08008. Available at: <factfinder2.census.gov/faces/nav/jsf/pages/searchresults.xhtml?refresh=t>. Accessed on December 4, 2014.

[26] U.S. Census Bureau, American Fact Finder, American Community Survey (ACS). 2013. "Sex of Workers by Means of Transportation to Work, Santa Clara City, California." 2011-2013 ACS 3-Year Estimates, ID B08006. Available at: <factfinder2.census.gov/faces/nav/jsf/pages/searchresults.xhtml?refresh=t>. Accessed on December 4, 2014.

[27] U.S. Census Bureau, American Fact Finder, American Community Survey (ACS). 2013. "Sex of Workers by Means of Transportation to Work for Workplace Geography, Santa Clara City, California." 2011-2013 ACS 3-Year Estimates, ID B08406. Available at: <factfinder2.census.gov/faces/nav/jsf/pages/searchresults.xhtml?refresh=t>. Accessed on December 4, 2014.

Secondary environmental impacts related to the jobs/housing balance, such as housing demand created by the Project in jurisdictions outside the City, are discussed and analyzed in Chapter 4, *Other CEQA Considerations*.

Scheme Analysis

Due to the different development schemes and intensities, the two proposed schemes (Schemes A and Scheme B) would result in a different amount of on-site employees and daytime versus nighttime population activity, as summarized below. In terms of employment growth at the Project site, office uses would generate the need for the most employees compared to retail, hotel, and residential uses. Scheme A is used as the basis for evaluation of impacts related to population and housing because it would generate the greatest number of new on-site residents and associated housing growth within the City. Both schemes would displace the same number of people from the Project site and the surrounding areas.

Impacts Not Evaluated in Detail

Displacement of Housing. The Project would demolish the existing structures at the Project site, which includes the golf course, BMX track facilities and potentially Fire Station 10. In addition, the Project would require the demolition of up to three off-site buildings in Tasman East industrial/office development for the construction of the Lick Mill Boulevard extension. However, the Project site and off-site buildings do not currently contain any housing units. Therefore, the Project would not displace residents. The Project would result in ***no impact*** related to the displacement of housing and, therefore, this impact is not evaluated further.

Impacts and Mitigation Measures

Impact POP-1: Population Growth. Implementation of the Project would induce substantial population growth greater than planned within the City and the region, resulting in potentially significant secondary environmental impacts. (Significance conclusions associated with this impact are provided in Impact LU-1)

Construction

Construction of the Project, including the site preparation and building demolition phases, would temporarily increase construction employment in the City. The number of construction workers per day would vary depending on the construction phase. Phase 2 (Parcel 4) would have the largest amount, with an average of approximately 900 workers per day. Phases 7 and 8 (Parcel 2) would require an average of approximately 400 workers per day.[28] Although construction would occur over an extended period of time, the demand for construction employment would likely be met within the existing and future labor market in the City and the County. The size of the construction workforce would vary during the different stages of construction, but a substantial quantity of workers from outside the City or County would not be expected to relocate permanently. Therefore, population within the City or County as a result of construction workers is not anticipated to increase substantially during Project construction, resulting in a ***less-than-significant*** impact.

[28] Related, 2015. Construction Documentation. April 2015.

Operation

Total population growth generated by the Project consists of: (1) growth from the Project's proposed residential units generating an on-site residential population, and (2) growth from the Project's proposed office buildings, retail, entertainment facilities, and hotel rooms generating an employment population. A portion of the employment population, in turn, is expected to live within the City. As shown in Table 3.12-6, the Project would result in an on-site residential population of approximately 3,270 people and a net increase of approximately 24,760 employees. The breakdown of employees generated by parcel is as follows (approximately): 4,440 employees for Parcel 1; 8,000 employees for Parcel 2; 2,670 employees for Parcel 3; 8,170 employees for Parcel 4; and 1,990 employees for Parcel 5.29

Growth from Proposed Housing. As shown in Table 3.12-6, the Project would result in the construction of up to 1,360 residential units on the Project site. Under Scheme A (the most conservative scenario for this topic), the Project would generate approximately 3,270 new residents within up to 1,360,000 gross square feet (gsf) of residential space. The estimate of approximately 3,270 residents generated by the Project is based on a household generation rate of 2.4 pph, as established by the City. Because the housing proposed includes multi-family residential units, which typically house fewer residents per unit, the household generation rate is lower than the City's average of about 2.64 pph.[30] As discussed above and shown in Table 3.12-2, the City's population is expected to grow by approximately 34,000 residents (27.8 percent) between 2015 and 2040. Therefore, the Project would account for approximately 9.6 percent of the population growth over this 25-year period.

Specifically, the increase in employment at the Project site would result in an increased housing demand and an influx of new residents within Santa Clara and other jurisdictions in the region and may even result in increased housing demand outside the San Francisco Bay region in outlying areas.[31] The County's[32] workers per household ratio is 1.39.[33] Using this ratio, the Project would result in a total demand of approximately 17,813 housing units to support the employment from the Project.[34] Approximately 13.5 percent of the City's workforce are also residents; this ratio was used to estimate the number of new workers who may seek housing in the City (2,405 units).[35] Using the City's average persons per household ratio of 2.64, and the Project's indirect housing demand of 2,405 units, the employment opportunities associated with the Project could result in an increase in population in the City of approximately 6,350 people.[36]

---

[29] Fehr & Peers. 2015. "City Place Santa Clara – Trip Generation Memorandum." March 4, 2015.

[30] Multi-family residential pph was established during conversations with City staff on September 10, 2014.

[31] Some of the employees in cities within Silicon Valley, like Santa Clara, are long-distance commuters from areas outside the Bay Area, such as San Joaquin County, who take advantage of relatively lower housing prices in outlying areas and the relatively higher salaries and/or available jobs in Silicon Valley.

[32] The Santa Clara County average of 1.39 workers per worker household is used in this analysis because new workers would be more similar to the County as a whole than the smaller City of Santa Clara profile. Workers are expected to live throughout the Bay Area, but there would be a particular concentration in the County. Therefore, the County's workers per worker household statistic is used in the calculations.

[33] U.S. Census Bureau. 2013. American Fact Finder, American Community Survey (ACS). 2011-2013 ACS 3-Year Estimates. "Selected Characteristics of the Native and Foreign-born Populations." Santa Clara County, California. ID S0501. Available: <http://factfinder.census.gov/faces/nav/jsf/pages/searchresults.xhtml?refresh=t>. Accessed October 27, 2014.

[34] 17,813 housing units = 24,760 employees / 1.39 worker per housing ratio

[35] 2,405 housing units within the City = 0.135 * 17,813

[36] 6,350 indirect population increase = 2,405 housing units * 2.64 pph

Table 3.12-6. Proposed On-Site Residents and Employees—Scheme A

Land Use	Gross Square Footage/Units	Generation Rate	Projected Residents/ Employees[a]
On-site Residents			
Residential	1,360,000/1,360 units	2.4 persons/household	3,270 residents
Total Residential	*1,360,000/1,360 units*	—	*3,270 residents*
Employees			
Retail[b]	1,502,000 gsf	450 gsf/employee	3,340 employees
Office	5,724,400 gsf	270 gsf/employee	21,200 employees
Hotel	578,000/700 rooms	840 gsf/employee	690 employees
Residential	1,360,000/1,360 units	1 employee/32 units	40 employees
Total Project Employees	—	—	*25,270 employees*
Existing On-site Employees[c]	—	—	35 employees
Existing Off-site Employees[d]	127,500 gsf	270 gsf/employee	475 employees
Total Net New Employees	**—**	**—**	***24,760 employees***

Source: Fehr & Peers 2015.
Notes:
a. Rounded to the nearest tens.
b. Retail includes food/beverage and entertainment employees.
c. Existing on-site employees include the Santa Clara Golf & Tennis Club, BMX track, and Fire Station 10.
d. Existing off-site employees include the three office buildings to be demolished at 2101, 2111, and 2121 Tasman Drive.
gsf = gross square feet

Total Population Growth. The City had approximately 119,075 residents within its jurisdictional boundary in 2013 and the population is projected to increase from 122,500 people in 2015 to approximately 156,500 people by 2040, according to the 2013 ABAG projections. This represents a 25-year population increase of approximately 34,000 residents (Table 3.12-2). The Project would result in approximately 3,270 new permanent residents living on the Project site and possibly an additional 6,350 City residents as a result of the proposed employment, as discussed above. Taking new residential uses and employment-based growth, the Project could result in up to approximately 9,620 new residents.[37] The projected Project-induced population of up to 9,620 new residents would represent approximately 28.3 percent of the anticipated population growth in the City in 2040.[38]

As shown in Table 3.12-3, ABAG estimates that between 2015 and 2040, the number of households in the City could grow by approximately 11,910. As discussed above, the Project would generate a housing demand of 2,405 units in the City to support employment generated by the Project. The 2,405 projected units would make up approximately 20.2 percent of the total projected household growth in the City between 2015 and 2040.[39] However, this is a conservative scenario, as some of the employees may choose to live in the 1,360 housing units at the Project site. Additionally, the vacancy rate in the

[37] 9,620 population growth in Santa Clara = 3,270 people living on-site + 6,350 people expected to live in the City
[38] 28.3 percent = 9,620 projected residents generated from Project / 34,000 projected additional City residents from 2015 to 2040.
[39] 20.2 percent = 2,405 projected units / 11,910 ABAG-projected household growth in Santa Clara from 2015 to 2040.

City, according to the U.S. Census Bureau, was approximately 4.9 percent in 2013, as noted above. This represents a total of approximately 2,205 vacant units in the City.[40] The estimated 2,405 housing units that would be needed to accommodate the estimated new households generated by the Project could partially be accommodated by the vacant units. If no vacant units were to become occupied by employees of the Project, which is unlikely, the 2,405 required units still would represent only 20.2 percent of the projected housing growth, as noted.

Although 13.5 percent of the total housing demand generated by the Project could occur within the City, the remaining 15,408 units would have to be distributed throughout the region (and possibly outside the region).[41] According to ABAG estimates, household growth in the Bay Area is expected to increase by approximately 587,680 households from 2015 to 2040. The housing demand resulting from the Project would represent approximately 2.6 percent of the regional growth during the 25-year period.[42]

However, because this growth is not anticipated in the City's plans or accounted for in regional planning efforts, the likely result of the induced housing demand resulting from Project-generated jobs is upward pressure for additional housing units to be built in the City, the region, and possibly even outside of the region. Discussion of the impact on the jobs/housing imbalance is included in Section 3.1, *Land Use and Land Use Planning* under Impact LU-1. Discussion of secondary environmental impacts outside the City and region due to induced housing growth is presented in Chapter 4, *Other CEQA Considerations*. As discussed in Chapter 4, some of these secondary environmental impacts would likely be significant. As discussed therein, the Project would result in ***significant*** environmental impacts associated with the increase in population and household growth within the City and the region (and possibly elsewhere as discussed in Chapter 4, *Other CEQA Considerations*). However, all development that would require discretionary review that could be induced by the Project would be subject to subsequent CEQA review. Through the CEQA process, lead agencies would be required to identify environmental impacts and feasible mitigation measures prior to project approval.

Impact POP-2: Displacement of People. The Project would not result in the displacement of a substantial number of people, necessitating the construction of replacement housing elsewhere. (LTS)

As discussed above under Impacts Not Evaluated in Detail, the existing Project site does not contain housing units. Therefore, the Project would not displace residents. However, the Project site does currently employ approximately 35 people on-site at the Santa Clara Golf & Tennis Club, BMX track, and Fire Station 10. Additionally, approximately 475 people are employed off-site in the Tasman East industrial/office development. All of these properties would be demolished during Project construction, which would displace the 510 existing workers.

The number of employees that would be displaced due to the demolition of the Santa Clara Golf & Tennis Club and BMX track would not be significant enough to trigger the construction of replacement housing elsewhere. The three fire personnel who could be displaced due to potential demolition of Fire Station

[40] U.S. Census Bureau, American Fact Finder, American Community Survey (ACS). 2013. "Selected Housing Characteristics." 2011-2013 ACS 3-Year Estimates, ID DP04. Available at: <factfinder2.census.gov/faces/nav/jsf/pages/searchresults.xhtml?refresh=t>. Accessed on October 27, 2014.

[41] 15,408 housing units generated by Project employment who would not live in the City = 17, 813 housing units needed to support Project employment - 2,405 housing units within the City

[42] 2.6 percent = 15,408 households generated by Project who would not live in the City / 587,680 household growth in the Bay Area from 2015 to 2040.

10 would be accommodated in the replacement fire station that would be constructed as part of this Project on Parcel 4 or on the Santa Clara Convention Center parking lot. In addition, approximately 475 off-site workers at the Tasman East industrial/office development could be accommodated within the proposed office uses on the Project site or within other similar office, industrial, or warehousing sites within commuting distance. Because the majority of the employees currently working on the Project site could be accommodated by the Project or within commuting distance, the Project would not displace a substantial number of people and would not necessitate the construction of replacement housing. Therefore, the impact would be ***less than significant***.

Cumulative Impacts

The geographic context for the cumulative analysis are the other current projects within the City of Santa Clara and in surrounding cities, as illustrated in Section 3.0, *Environmental Impact Analysis*. As shown in Table 3.0-1, these projects include net new development, consisting of approximately the following: 12.5 million gsf of commercial uses, 690 hotel rooms, 943,000 gsf of industrial uses, 192,000 gsf of institutional uses, and 9,400 residential units.

This analysis examines the effects of the proposed development in the City in combination with other current projects, probable future projects, and projected future growth within the applicable geographic context.

Cumulative impacts are addressed only for those thresholds that would result in a Project-related impact, whether it be less than significant, significant, or significant and unavoidable. If the Project would result in no impact with respect to a particular threshold, it would not contribute to a cumulative impact. Therefore, no analysis would be required. The Project would not result in the displacement of existing housing, resulting in no impact with respect to this topic. Thus, this topic is not analyzed for cumulative impacts.

This cumulative analysis examines the effects of the Project in the relevant geographic area in combination with other current projects, probable future projects, and projected future growth.

Impact C-POP-1: Cumulative Population and Housing Impacts. The Project, in combination with other foreseeable development in the vicinity, would induce substantial population growth and housing demand greater than planned within the City and region. However, the Project, in combination with cumulative development, would not displace substantial numbers of people. (Significance conclusions associated with cumulative population and housing growth are provided in Impact C-LU-1. Cumulative impacts related to displacement, LTS)

The Project, in combination with other projected growth in the City and surrounding areas, would increase population and housing in the region. The other projects would include commercial, industrial, institutional, office/R&D, and residential developments. If these projects were to induce substantial population growth in the region that would exceed ABAG projections, the cumulative impact would be significant. The Project is not accounted for in the City's General Plan and associated growth projections. With the exception of the cumulative Tasman East project, as discussed further below, this analysis assumes that all other projects in the City presented in Section 3.0, *Environmental Impact Analysis*, are accounted for in the City's General Plan. However, due to the pace of development in the region, which in many cases is outpacing projected growth, this analysis assumes that not all of the foreseeable projects listed in Section 3.0, *Environmental Impact Analysis*, in the cities of Milpitas, San José, and Sunnyvale are accounted for in their respective general plans. Growth associated with these projects occurring outside the general plan process is, thus, not captured in regional growth projections. Conversely, projects that

are anticipated in general plans are accounted for in regional growth projections. These projects would not induce population growth in the context of this impact discussion.

The Tasman East (20) project would potentially develop approximately 4,100 dwelling units.[43] Development of 4,100 dwelling units in Tasman East was not accounted for in the City of Santa Clara General Plan, which contemplated a maximum unit count of 2,280 for this area. Thus, the difference in what is programmed in the General Plan versus the anticipated development intensity at this site is 1,820 dwelling units. The increase in 1,820 dwelling units at Tasman East would result in an increase in resident population of 4,805.[44] In combination with the Project, this would result in an additional 14,425 residents (induced from both proposed housing and proposed jobs) that are not included in the General Plan and Santa Clara growth projections. Determining which cumulative projects are not accounted for in each jurisdiction's General Plan is outside the scope of this analysis. However, as stated above, this analysis conservatively assumes that the jurisdictions considered in this analysis do not account for all of the growth listed in Section 3.0, *Environmental Impact Analysis* in their respective General Plans. Due to the anticipated magnitude of this growth, the total cumulative impact of induced population growth, taking into account the Project, the Tasman East project, and unaccounted for growth in within the cities of Milpitas, San José, and Sunnyvale, is considered ***significant***.

Taking new residential uses and employment-based growth, the Project could result in up to approximately 9,620 new residents. This represents approximately 28.3 percent of the City's population growth between 2015 and 2040 and 1.8 percent of population growth in the County during that same period. As discussed above, the Project would generate a housing demand of 2,405 units in the City to support employment generated by the Project. The 2,405 projected units would make up approximately 20.2 percent of the total projected household growth in the City between 2015 and 2040 and 5.4 percent of growth in the County during that same time. The Project's contribution to induced population growth and associated housing demand, which ultimately affects the jobs/housing balance, is considered cumulatively considerable.

Discussion of the cumulative environmental impacts resulting the jobs/housing imbalance that results from unplanned growth is included in Section 3.1, *Land Use and Land Use Planning* under Impact C-LU-1. As discussed therein, the Project would result in a cumulatively considerable contribution to this impact because it would exacerbate the City's job/housing imbalance significantly, which would manifest in other significant secondary physical environmental impacts. Implementation of Mitigation Measure LU-1.1 would not mitigate the Project's contribution to this imbalance because there is uncertainty regarding implementation of this measure, which relies on approval from the City Council. Because no feasible mitigation measures are available to reduce this impact to a less-than-significant level, this is considered a ***significant*** cumulative impact.

In terms of displacing substantial numbers of people, if other current projects were to displace a large portion of the existing employee population in the City without providing for replacement spaces or accommodation, the impact would be significant. As shown in Table 3.0-1, most of the other projects involve currently vacant, industrial, and commercial uses, which would be replaced with office/R&D, hotel, and residential uses. These are primarily redevelopment projects, with an expansion of uses that would be similar to existing uses. It is likely that the other projects would be able to accommodate any displaced employees (if any). Thus, the cumulative effect of displacing substantial numbers of people in the region is ***less than significant***.

---

[43] This cumulative analysis focuses on the number of dwelling units at Tasman East, above what is programmed in the General Plan.

[44] 4,805 residents = 1,820 dwelling units * City average of 2.64 pph.

This Page Intentionally Left Blank

3.13 Public Services and Recreation

This section describes the existing public services and recreational facilities that serve the Project site and its vicinity. It also describes the impacts on public services that would result from implementation of the Project and mitigation measures that would reduce significant impacts. The public services addressed in this section include fire and emergency services, police, schools, parks and recreation, and libraries. The analysis is based on information regarding the capacity of existing public services and recreational facilities, and the changes in facilities and service demands with the Project. Refer to Section 3.12, *Population and Housing*, for more data related to population, employment, and housing. In addition, relevant data, goals and policies in the *City of Santa Clara 2010–2035 General Plan* (General Plan) are considered in this analysis.

Issues identified in response to the Notices of Preparation (NOPs) (Appendix 1) were considered in preparing this analysis. The NOP comments pertained to the generation of new students and the consideration of the existing school capacity, how the increase of on-site activity could affect police service, and the replacement of the existing parks and open space.

Existing Conditions

Regulatory Setting

State

California Senate Bill 50 (SB 50). Under the provisions of SB 50, school districts may collect Level Two and Level Three fees to offset the costs related to increasing school capacities in response to growing student enrollments associated with development. Level Two fees require a project developer to provide one-half the costs of accommodating students in new schools, while the State provides the other half. Level Three fees require a project developer to pay the full cost of accommodating the students in new schools and would be implemented at the time the funds available from Proposition 1A (approved by the voters in 1998) are expended. School districts must demonstrate to the State their long-term facilities needs and costs based on long-term population growth in order to qualify for Level Two or Level Three fees.

California Government Code, Section 65995 (b). In January 2014, the State Allocation Board (SAB) approved an increase in statutory school facilities fees ("Level 1 School Fees") per Government Code Section 65995 (b) to $3.36 per square foot for residential construction of 500 square feet (sf) or more and $0.54 per square foot for new commercial development.[1] These fees can be increased every other year and are expected to continue to increase in response to inflation.

[1] State Allocation Board. 2014. *Report of the Executive Officer, Index Adjustment on the Assessment for Development.* Available: <http://www.documents.dgs.ca.gov/OPSC/Resources/Index_Adj_Dev.pdf >. Accessed: December 4, 2014.

Local

City of Santa Clara General Plan

The City of Santa Clara's (City's) current General Plan[2] includes goals and policies associated with public services.

Goal 5.3.4-G3. Mixed-use development that maximizes accessibility to alternate transportation modes and integrates pedestrian, bicycle, transit, open space and outdoor uses to encourage active centers.

Goal 5.9.1-G2. Parks, trails and open space located within a ten-minute walk to residential neighborhoods and employment centers.

Goal 5.9.1-G3. New parks, open space and recreation provided with new development so that existing facilities are not overburdened.

Policy 5.9.1-P4. Provide connections between private and public open space through publicly accessible trails and pathways and by orienting open spaces to public streets.

Policy 5.9.1-P14. Encourage publicly accessible open space in new development.

Policy 5.9.1-P16: Encourage non-residential development to contribute toward new park facilities to serve the needs of their employees.

Policy 5.9.1-P17. Foster site design for new development so that building height and massing do not overshadow new parks and plazas.

Policy 5.9.1-P18. Promote open space and recreation facilities in large-scale developments in order to meet a portion of the demand for parks generated by new development.

Policy 5.9.1-P20. Promote the continuation of a parks per population ratio of 2.4 per 1,000 residents and explore the potential to increase the ratio to 3.0, based on the Parks and Recreation Needs Assessment (Parks Master Plan), referenced in Plan Prerequisite 5.1.1-P24.

Policy 5.9.3-P3. Maintain a City-wide average three minute response time for 90 percent of police emergency service calls.

Policy 5.9.3-P4. Maintain a City-wide average three minute response time for fire emergency service calls.

Policy 5.10.5-P24. Protect City residents from the risks inherent in the transport, distribution, use and storage of hazardous materials.

Policy 5.10.5-P28. Continue to require all new development and subdivisions to meet or exceed the City's adopted Fire Code provisions.

Santa Clara Municipal Fire and Environmental Code. This code, which was adopted by the City in October 2013, adopts by reference the 2012 edition of the International Fire Code (IFC) with necessary amendments.

---

[2] City of Santa Clara. 2010. *City of Santa Clara 2010–2035 General Plan*. Adopted: November 16, 2010. Last amended: December 9, 2014. Available: <http://santaclaraca.gov/index.aspx?page=1263>. Accessed: February 1, 2015.

Santa Clara City Code Chapter 17.35. This chapter of the City Code was first enacted by the City on July 15, 2014, to ensure that new residential development provides adequate park and recreational land and/or pays a fee in-lieu of dedication in order to mitigate the impacts of new growth. The Quimby Act authorizes the City to impose a parkland dedication requirement and/or fee in-lieu of parkland dedication for new residential subdivisions based on 3 acres of parkland per 1,000 residents. For residential developments not involving a subdivision, such as the Project, the Mitigation Fee Act authorizes the City to collect parkland dedication and/or fee in-lieu of dedication at a ratio of 2.53 acres per 1,000 residents.[3]

Environmental Setting

Fire and Emergency Services

Fire protection and emergency medical response services for the Project site are provided by the Santa Clara Fire Department (SCFD). Santa Clara County Emergency Medical Services contracts with Rural Metro to provide emergency medical transport services for the City. According to the SCFD, the City has a total of 10 fire stations with approximately 180 paid personnel, including 154 budgeted Suppression Division positions (firefighters) when fully staffed.[4] Because of recent fiscal challenges, 26 full-time employee positions are vacant and non-funded. There are 65 reserve employees; the equipment includes eight engines, two trucks, one hazardous materials unit, and one command vehicle. In addition, three ambulances and one rescue/light unit are available on an "on-call" basis and are not staffed full time. Daily staffing ranges from 31 to 34 firefighters on duty per day within the SCFD.

SCFD headquarters is located at Benton Street and Alviso Street. Fire protection to the Project site is provided by Fire Station 10, which is located on the Project site at 5111 Stars and Stripes Drive (see Figure 3.13-1). Fire Station 10 is staffed with three full-time firefighters. It houses one Type 1 fire engine and one Type 6 fire engine, which is designated for Levi's Stadium. Crews from Fire Station 8, at 2400 Agnew Road, and Fire Station 6, at 888 Agnew Road, provide supplemental resources for medical calls and structure fires. The nearest paramedic services are available at Fire Station 6, approximately 1.4 miles south of the Project site. The nearest hazardous materials unit is located at Fire Station 9 at 3011 Corvin Drive, approximately 2.3 miles southwest of the Project site.

The SCFD uses the nationally recognized National Fire Protection Association 1710 response standard.[5] Using a model based on services provided 90 percent of the time, the SCFD standard is 4 minutes for the first-arriving unit for 90 percent of high-level emergency calls. The SCFD standard is less than 8 minutes for paramedic units for 90 percent of calls. Fire Station 10 and Fire Station 6 currently meet the SCFD standard for the first-arriving unit and paramedic units, respectively. The SCFD is currently meeting the SCFD response time standard for high-level emergency calls but is only meeting the response time standard for paramedic units for 85 percent of calls.[6]

---

[3] City of Santa Clara. n.d. Residential Development – Parkland Dedication, Credits & Fees In-Lieu. Available: <http://santaclaraca.gov/Modules/ShowDocument.aspx?documentid=12555>. Accessed: April 20, 2015.

[4] Kelly, Bill. Fire chief. April 16, 2015—response to Debby Fernandez, City of Santa Clara.

[5] The National Fire Protection Association's 1710 response standard specifies requirements for effective and efficient organization and deployment of fire suppression operations, emergency medical operations, and special operations to the public by career fire departments to protect citizens and the occupational safety and health of fire department employees. National Fire Protection Association. n.d. NFPA 1710: Standard for the Organization and Deployment of Fire Suppression Operations, Emergency Medical Operations, and Special Operations to the Public by Career Fire Departments. Available: <http://www.nfpa.org/codes-and-standards/document-information-pages?mode=code&code=1710>. Accessed: December 4, 2014.

[6] Kelly, Bill. Fire chief. April 16, 2015—response to Debby Fernandez, City of Santa Clara.

Graphics ... 00333.14 (4-17-2015) tm

Figure 3.13-1
Public Services Serving the Project Site
City Place Santa Clara

As of 2013, the SCFD is serving a population of approximately 119,075 full-time residents, with an expanding commuter-adjusted daytime population of approximately 204,852 persons.[7] Events at Levi's Stadium may increase the total population above 204,852 persons, particularly on weekdays. With 154 budgeted Suppression Division positions when fully staffed, the current firefighter-to-resident ratio is 1.29 firefighters per 1,000 residents, and the firefighter-to-daytime population ratio is 0.75 firefighter per 1,000 persons. However, the SCFD has not established a specific standard ratio for fire personnel per resident. According to the SCFD, the personnel, equipment, and facilities at Fire Station 10, Fire Station 8, and Fire Station 6 are adequate to meet existing demand.[8]

Police

Police protection services for the Project site are provided by the Santa Clara Police Department (SCPD). In the case of extreme emergency, there is a mutual aid agreement with surrounding jurisdictions. The SCPD currently has two police stations that service the City, with headquarters at 601 El Camino Real and the Northside Police Substation in Rivermark Village at 3992 Rivermark Parkway (see Figure 3.13-1). Although the Northside Police Substation is closer to the Project site than SCPD headquarters, the Northside Police Substation serves as a point of contact for residents and is not staffed by full-time officers.[9] The SCPD headquarters at 601 El Camino Real, approximately 4.2 miles south of the Project site, serves the Project site. Currently, the SCPD has 209 full-time employees, including 145 sworn officers, 64 civilian personnel, 23 reserves, 44 crossing guards, one probation officer, and 95 special event police officers. All personnel are assigned to the headquarters and divided into three divisions: the Field Operations Division (Patrol), the Investigations Division (Detective Bureau), and the Administrative Services Division.

As of 2013, the SCPD is serving a population of approximately 119,075 residents, resulting in a ratio of 1.22 officers per 1,000 residents. The SCPD also serves a daytime population of approximately 204,852 residents and employees, resulting in a ratio of 0.71 officer per 1,000 residents and employees. The goal of the SCPD is to increase staffing to improve its ratio of 1.22 officers per 1,000 residents to reach the national average of 1.7 officers per 1,000 residents. In 2014, the SCPD received 184,992 emergency 911 calls, which resulted in approximately 61,394 actual calls for service. The SCPD's response time standard is 3 minutes or less for 90 percent of high-priority calls, as outlined in the General Plan. Currently, the SCPD has an average response time of 3 minutes 35 seconds to high-priority calls for service, resulting in a response time that is slightly higher than the standard. Currently, the SCPD requires additional police officers and support staff to meet the SCPD's response time goals. The SCPD participates in a mutual aid agreement with the other law enforcement jurisdictions in Santa Clara County.[10]

Schools

The Santa Clara Unified School District (SCUSD) provides public education services to students in the City. The SCUSD consists of 16 elementary, three middle, two high schools, one K–8, four alternative schools, and one adult education school that serve all of Santa Clara, the eastern portion of Sunnyvale, the northern portion of San José, all of Alviso, the northeastern portion of Cupertino, and the western portion of Milpitas.[11]

---

[7] 119,075 residents in the City + (101,130 jobs in the City – 13,353 residents who live and work in the City) = 204,852 commuter-adjusted daytime population. Refer to Section 3.12, *Population and Housing*.

[8] Kelly, Bill. Fire chief. April 16, 2015—response to Debby Fernandez, City of Santa Clara.

[9] Sellers, Michael. Police chief. March 25, 2015—response to Debby Fernandez, City of Santa Clara.

[10] Sellers, Michael. Police chief. March 25, 2015—response to Debby Fernandez, City of Santa Clara.

[11] Healy, Michal. Bond program consultant, Santa Clara Unified School District. May 1, 2015—response to Debby Fernandez, City of Santa Clara.

The Project site is served by George Mayne Elementary, at 5030 North First Street in Alviso (approximately 0.5 mile north of the Project site); Don Callejon K–8 School, at 4176 Lick Mill Road (approximately 1.4 miles south of the Project site); and Wilcox High School, at 3250 Monroe Street (approximately 2.9 miles southwest of the Project site).[12] Figure 3.13-1 illustrates the locations of the three schools that would serve the Project site. Enrollment and percent capacity for each school in the SCUSD are displayed in Table 3.13-1.

As shown in Table 3.13-1, none of the schools that serve the Project site had available capacity in 2014. Specifically, George Mayne Elementary was 46 students over capacity; Don Callejon School, grades 6 through 8, was 73 students over capacity; and Wilcox High School was 44 students over capacity. According to the SCUSD, the total enrollment is forecast to increase by more than 1,900 students by 2024, for a total of approximately 17,200 students.[13]

Table 3.13-1. Santa Clara Unified School District School Enrollment and Capacity

School	School Location	Total Enrollment[a]	Total Capacity	Available Capacity[b]
Elementary Schools				
Bowers	Santa Clara	339	382	43
Bracher	Santa Clara	359	405	46
Braly	Sunnyvale	445	428	-17
Briarwood	Santa Clara	381	450	69
C.W. Haman	Santa Clara	391	383	-8
Don Callejon K–5[c,d]	Santa Clara	621	472	-149
George Mayne[d]	Alviso	541	495	-46
Kathryn Hughes	Santa Clara	444	517	73
Laurelwood	Santa Clara	686	607	-79
Millikin	Santa Clara	488	383	-105
Montague	Santa Clara	380	405	25
Pomeroy	Santa Clara	501	563	62
Ponderosa	Sunnyvale	568	540	-28
Scott Lane	Santa Clara	455	495	40
Sutter	Santa Clara	488	427	-61
Washington	Santa Clara	357	383	26
Westwood	Santa Clara	443	540	97
Total		*7,887*	*7,875*	*-12*
Middle Schools				
Buchser	Santa Clara	1,006	1,013	7
Cabrillo	Santa Clara	850	810	-40
Don Callejon 6–8[c,d]	Santa Clara	398	325	-73
Peterson	Sunnyvale	896	1,193	297
Total		*3,150*	*3,341*	*191*

[12] Healy, Michal. Bond program consultant, Santa Clara Unified School District. March 10, 2015—response to Debby Fernandez, City of Santa Clara.

[13] Enrollment Projection Consultants. 2014. *Projected Enrollments 2014 to 2024 in the Santa Clara Unified School District*. December 17, 2014.

Table 3.13-1. Santa Clara Unified School District School Enrollment and Capacity

School	School Location	Total Enrollment[a]	Total Capacity	Available Capacity[b]
High Schools				
Santa Clara	Santa Clara	1,912	1,620	-292
Wilcox[d]	Santa Clara	1,934	1,890	-44
Total		*3,846*	*3,510*	*-336*

Source: Enrollment Projection Consultants. 2014. *Projected Enrollments 2014 to 2024 in the Santa Clara Unified School District*. December 17, 2014.

Notes:

a. As of October 2014. Total enrollment represents the attending enrollment rather than resident students.

b. Negative capacity indicates that enrollment exceeds capacity and positive capacity indicates that capacity exceeds enrollment.

c. Don Callejon, a K–8 school, is divided into K–5 and 6–8 in this table to correlate with the data provided by the SCUSD.

d. Schools that would serve the Project site.

The SCUSD currently has four closed school sites located in the City that could be used to serve new development.[14] The SCUSD is currently planning to reopen the Central Park Elementary School (formerly Millikin Elementary School) site as an SCUSD school for the 2016–2017 school year. Central Park Elementary School will be located in the southern portion of the SCUSD service area. The SCUSD is also planning a new high school on the old Agnews Developmental Center property. Although these two new schools would help alleviate over-capacity of elementary schools and high schools in the SCUSD, they would not directly serve the Project site.[15] Regardless, the new schools would likely result in a redistribution of students within the SCUSD and potentially alleviate overcrowding issues at the schools that serve the Project site.

New school facilities are also anticipated in north San José that would add more capacity for new students and reduce the number of students in SCUSD facilities. Alternatively, school attendance boundaries could be modified or modular classrooms could be used to accommodate new students. Students are also able to apply for an in-district transfer and attend a school outside their home attendance boundary if the requested school has capacity.

Parks and Recreation

The Project site is currently occupied by the Santa Clara Golf & Tennis Club and a Bicycle-Motocross (BMX) track. The City-owned 6,704-yard, 18-hole public golf course at 5155 Stars and Stripes is located on 155 acres of the Project site (Parcels 2, 3, and 4) and is operated by the City's Sports & Open Space Authority under a management agreement with American Golf Corporation. The public golf course features fairways, 58 bunkers, and water hazards. Approximately 75,000 to 81,000 rounds are

[14] Healy, Michal. Bond program consultant, Santa Clara Unified School District. March 10, 2015—response to Debby Fernandez, City of Santa Clara.

[15] Healy, Michal. Bond program consultant, Santa Clara Unified School District. June 23, 2015—response to Debby Fernandez, City of Santa Clara.

completed by golfers annually.[16] In addition to the golf course itself, the Santa Clara Golf & Tennis Club includes a clubhouse with a restaurant; a banquet facility; seven public lighted tennis courts, subcontracted by the Sylvano Tennis Academy and available for rent by the hour; locker rooms; extensive practice facilities; and a maintenance facility. Approximately 180 people are members of the Sylvano Tennis Academy at the Project site.[17]

The BMX track, operated by the Santa Clara Police Activities League (P.A.L.) BMX, is located on the former Landfill in the northeast portion of the Project site at 5401 Lafayette Street. The 7-acre facility includes a dirt track and race course, gates, a paved parking area, a snack bar, and lighting for nighttime use.[18] The BMX track is located on Parcel 1. The BMX season runs continuously from January 1 through December 15, with races scheduled for Tuesday, Friday, and Saturday nights and some Sundays. Practice times are available after races finish. Only USABMX members are permitted to ride on the track, but the site is open for free to the general public as spectators.[19] BMX racing is an Olympic sport, and the facility at the Project site hosts hundreds of riders from in and around Santa Clara.[20]

As shown in Table 3.13-2, the City and region are served by several other golf courses, tennis courts, and BMX tracks. Within a 20-mile radius, approximately 39 golf courses (both public and private) are available for use, and include 9- or 18-hole (or more) courses with other amenities similar to the Santa Clara Golf & Tennis Club such as driving ranges, clubhouses, and restaurants. Of these 39 golf courses, 21 are open to the public. The Santa Clara Golf & Tennis Club competes in the mid- to lower- range priced segment of the market and caters to residents. The primary competitors, as shown in Table 3.13-2, include mainly Sunnyvale Golf Course, San José Municipal Golf Course, Summitpointe Golf Club, Los Lagos Golf Course, Spring Valley Golf Course, Palo Alto Golf Course, and Shoreline Golf Course.[21]

Table 3.13-2. Golf, Tennis, and BMX Facilities within the Vicinity of the Project Site

Facility	Public/ Private	City	Distance to Project Site	Facility Features
Golf Courses within 20 miles				
Sunnyvale Golf Course*	Public	Sunnyvale	4.0 mi (W)	18 holes
Sunken Gardens Golf Course	Public	Sunnyvale	4.2 mi (SW)	9 holes, driving range
San José Municipal Golf Course*	Public	San José	4.8 mi (SE)	18 holes, driving range
Pruneridge Golf Course	Public	Santa Clara	5.3 mi (S)	9 holes, driving range
Summitpointe Golf Club*	Public	Milpitas	6.2 mi (NW)	18 holes, driving range
Shoreline Golf Course*	Public	Mountain View	6.5 mi (NW)	18 holes, practice range
Spring Valley Golf Course*	Public	Milpitas	7.2 mi (E)	18 holes, driving range
Blackberry Farm Golf Course	Public	Cupertino	7.6 mi (SW)	9 holes

[16] Teixeira, James. Director of Parks and Recreation. September 10, 2014—email correspondence with Debby Fernandez, Santa Clara Planning Department.

[17] Teixeira, James. Director of Parks and Recreation. May 18, 2015—email correspondence with Debby Fernandez, Santa Clara Planning Department.

[18] USA BMX, Santa Clara P.A.L. n.d. *About Santa Clara P.A.L. BMX*. Available: <www.usabmx.com/tracks/1031/about/track>. Accessed: May 13, 2015.

[19] Santa Clara Police Activities League. *BMX*. Available: <http://santaclarapal.org/bmx/>. Accessed: May 13, 2015.

[20] USA BMX, Santa Clara P.A.L. n.d. *About Santa Clara P.A.L. BMX.* Available: <www.usabmx.com/tracks/1031/about/track>. Accessed: May 13, 2015.

[21] American Golf Corporation, Santa Clara Golf & Tennis Club. n.d. *Business Plan FY 2015–2016*. Competitive Market Analysis.

Table 3.13-2. Golf, Tennis, and BMX Facilities within the Vicinity of the Project Site

Facility	Public/ Private	City	Distance to Project Site	Facility Features
Deep Cliff Golf Course	Public	Cupertino	8.5 mi (SW)	18 holes, driving range
Palo Alto Golf Course*	Public	Palo Alto	8.7 mi (NW)	18 holes, driving range
Fremont Park Golf Club	Public	Fremont	10.4 mi (NE)	9 holes, driving range
Los Lagos Golf Course*	Public	San José	10.7 mi (SE)	18 holes, driving range
Sunol Valley Golf Club	Public	Sunol	12.6 mi (NE)	36 holes
The Ranch Golf Club*	Public	San José	12.6 mi (SE)	18 holes
Rancho del Pueblo Golf Course	Public	San José	13.3 mi (SE)	18 holes, driving range
Mission Hills Golf Course	Public	Hayward	15.9 mi (N)	9 holes
Callippe Preserve Golf Course	Public	Pleasanton	16.4 mi (NE)	18 holes, driving range
Emerald Hills Golf Course	Public	Redwood City	16.5 mi (W)	9 holes
Santa Teresa Golf Club*	Public	San José	18.2 mi (NE)	18 holes, driving range
The Course at Wente Winery	Public	Livermore	19.1 mi (NE)	18 holes
Skywest Golf Course	Public	Hayward	19.9 mi (NW)	18 holes
San José Country Club	Private	San José	8.6 mi (E)	18 holes
Golf Club at Moffett Field	Private	Mountain View	4.0 mi (E)	18 holes, driving range
Los Altos Golf and Country Club	Private	Los Altos	7.7 mi (SW)	9 holes
Saratoga Country Club	Private	Saratoga	9.6 mi (SW)	18 holes
La Rinconada Country Club	Private	Los Gatos	10.6 mi (S)	18 holes
Palo Alto Hills Golf & Country Club	Private	Palo Alto	11.3 mi (SW)	18 holes, driving range
Stanford University Golf Course	Private	Stanford/ Palo Alto	12.0 mi (W)	18 holes, driving range
Boulder Ridge Golf Club	Private	San José	13.4 mi (SE)	18 holes
Sharon Heights Golf & Country Club	Private	Menlo Park	13.8 mi (W)	18 holes
Silver Creek Valley Country Club	Private	San José	14.2 mi (SE)	18 holes, driving range
The Villages Golf and Country Club	Private	San José	14.4 mi (SE)	18 holes
Almaden Golf and Country Club	Private	San José	14.5 mi (SE)	18 holes
Menlo Country Club	Private	Woodside	14.8 mi (W)	18 holes
Castlewood Country Club	Private	Pleasanton	16.0 mi (N)	36 holes, driving range
Ruby Hill Golf Club	Private	Pleasanton	16.7 mi (SE)	18 holes, driving range
Stonebrae Golf and Country Club	Private	Hayward	17.7 mi (N)	18 holes
Cinnabar Hills*	Private	San José	20.0 mi (S)	27 holes
Coyote Creek*	Private	San José	20.0 mi (S)	36 holes
Total Golf Courses				*39 golf courses*
Public Tennis Courts within 5 miles				
Fairway Glen Park	Public	Santa Clara	0.4 mi (SE)	2 tennis courts
Lick Mill Park Tennis Courts	Public	Santa Clara	0.6 mi (SE)	2 tennis courts
Santa Clara Tennis Center	Public	Santa Clara	4.3 mi (SW)	8 tennis courts
Santa Clara Central Park	Public	Santa Clara	4.6 mi (SW)	2 tennis courts

Table 3.13-2. Golf, Tennis, and BMX Facilities within the Vicinity of the Project Site

Facility	Public/ Private	City	Distance to Project Site	Facility Features
Mission College	Public	Santa Clara	1.1 mi (SW)	9 tennis courts
Mary Gomez Park Tennis Courts	Public	Santa Clara	4.9 mi (S)	2 tennis courts
Henry Schmidt Park	Public	Santa Clara	4.9 m (S)	5 tennis courts
Central Park	Public	Santa Clara	4.5 mi (S)	2 tennis courts
Adrian Wilcox High School	Public	Santa Clara	2.8 mi (SW)	6 tennis courts
Thamien Park	Public	Santa Clara	1.4 mi (E)	1 tennis court
Santa Clara High School	Public	Santa Clara	4.3 mi (SW)	8 tennis courts
Montague Park	Public	Santa Clara	2.0 mi (SE)	2 tennis courts
Washington Park	Public	Sunnyvale	4.7 mi (SE)	2 tennis courts
Fairwood Park	Public	Sunnyvale	1.2 mi (SW)	2 tennis courts
Lakewood Park	Public	Sunnyvale	1.6 mi (W)	2 tennis courts
Columbia Park	Public	Sunnyvale	2.8 mi (SW)	2 tennis courts
Ponderosa Park	Public	Sunnyvale	3.6 mi (SW)	2 tennis courts
Braly Park	Public	Sunnyvale	3.9 mi (SW)	2 tennis courts
Orchard Gardens Park	Public	Sunnyvale	2.9 mi (W)	2 tennis courts
Peterson Middle School	Public	Sunnyvale	4.4 mi (SW)	8 tennis courts
Sunnyvale Municipal Tennis Center	Public	Sunnyvale	4.6 mi (SW)	16 tennis courts
Milpitas High School	Public	Milpitas	4.9 mi (NE)	8 tennis courts
Pinewood Park	Public	Milpitas	3.5 mi (E)	4 tennis courts
Hall Memorial Park	Public	Milpitas	4.0 mi (NE)	4 tennis courts
Dixon Landing Park	Public	Milpitas	4.4 mi (NE)	3 tennis courts
Tom Evatt Park	Public	Milpitas	3.5 mi (E)	4 tennis courts
Fairway Glen Park	Public	Santa Clara	0.4 mi (SE)	2 tennis courts
Lick Mill Park Tennis Courts	Public	Santa Clara	0.6 mi (SE)	2 tennis courts
Total Tennis Courts				*114 tennis courts*
BMX Tracks within 30 miles				
408MX	Private	San José	10 mi (SE)	Track, jumps
Calabazas Park	Public	San José	7.7 mi (SW)	Track, jumps
BMX Park	Public	Pleasanton	19.3 mi (NE)	Track, jumps
Fallon Sports Park	Public	Dublin	22.0 mi (NE)	Track
Chanticleer Avenue Park	Public	Santa Cruz	29.6 mi (SW)	Track, jumps
Total BMX Tracks				*5 tracks*

Sources:
Google Earth, 2015; Professional Golfers' Association (PGA), "Golf Courses" for zip code 95054. Available: <http://www.pga.com/golf-courses>. Accessed May 14, 2015.
Note:
* Denotes the main competitor golf courses for the Santa Clara Golf & Tennis Club based on mid- to lower end segments of the market.

Approximately 114 publicly accessible tennis courts within 28 separate facilities are available within a 5-mile radius at parks, schools, and tennis centers. These tennis courts are located in the cities of Santa Clara, Sunnyvale, and Milpitas. The closest BMX track to the Project site is 408MX, located at 2542 Monterey Road in San José, approximately 10 miles southeast of the Project site. Including 408MX, there are five BMX facilities within a 30-mile radius.

Parks and recreation services in the City are provided by the City of Santa Clara, Parks and Recreation Department (Department). The Department is responsible for maintaining the various parks and recreation facilities. Currently, approximately 30 parks are dispersed throughout the City, covering approximately 170 acres.[22] Including open space areas, as discussed in more detail below, the City has approximately 299 acres of parks and open space areas that serve the community, resulting in 2.53 acres of parkland per 1,000 residents. The existing ratio is less than the City standard of 3.0 acres per 1,000 residents as specified in Santa Clara City Code Chapter 17.35.[23] As such, there is a need for an additional 97 to 115 acres of new parkland and approximately 29 to 30 acres of active sports facilities in the City in order to achieve the City standard. The Santa Clara Golf & Tennis Club and BMX track are not included in the City's park and recreation facilities inventory and are not considered in the City's parkland per residents ratio.[24]

The park system is divided and categorized by size and intended use. Table 3.13-3 lists all of the existing parks and recreation facilities in the City, including one community park, four mini parks, and 25 neighborhood parks. Community parks are generally more than 15 acres in size and include a variety of recreation amenities. Central Park, the City's only Community Park, offers a swim center, a tennis center, playing fields, lawn bowling, and an exercise course, as well as picnic areas and a playground. Mini parks include parks no more than 1 acre in size, and comprise less than 1 percent of the City's parkland space. Mini parks generally have smaller-scale service areas and amenities. Neighborhood parks are the most common type of park within the City and cover approximately 123 acres, almost 50 percent of the City's total parkland. Neighborhood parks are typically between 1 and 15 acres in size and include trails, paths, children's playgrounds, sports fields, and amenities. Recreational facilities account for approximately 6 percent of the City's total park acreage. Many of these facilities are located within larger park sites.

As also shown in Table 3.13-3, Santa Clara County operates a system of regional parks and trails that are open to local residents. There are no County parks located in the City; however, the County, with City assistance, developed San Tomas Aquino/Saratoga Creek Trail, which runs through neighborhoods throughout the city. The San Tomas Aquino Creek Trail/Saratoga Creek Trail is an approximately 8-mile-long walking, running, and bicycling trail extending south from the Bay to Cabrillo Avenue. The City-maintained public parking lot at the Santa Clara Golf & Tennis Club provides parking and trail access.[25]

As shown in Figure 3.13-1, Guadalupe River Trail in the City of San José is just east of the City and extends 3 miles from US 101 to the south, culminating in more than 150 acres of parkland near the City limits. The 9-mile northern/central reach of the Guadalupe River Trail extends from Alviso to Guadalupe River Park, in San José. The Guadalupe River Trail runs along both sides of the river on the top of the existing levees.

---

[22] Teixeira, James. Director of Parks and Recreation. March 12, 2015—response to Debby Fernandez, Santa Clara Planning Department.

[23] This total does not include the following facilities: Santa Clara Golf & Tennis Club, bicycle-motocross (BMX) track, Mission City Memorial Park and Agnews Historic Cemetery, or the Harris Lass History Museum, Headen-Inman House, and Triton Museum grounds. This total also does not include other SCUSD school facilities that serve the community.

[24] City of Santa Clara. 2010. *City of Santa Clara 2010–2035 General Plan*. Adopted: November 16, 2010. Last amended: December 9, 2014. Available: <http://santaclaraca.gov/index.aspx?page=1263>. Accessed: February 1, 2015.

[25] City of Santa Clara. n.d. *Parks – San Tomas Aquino/Saratoga Creek Trail*. Available: <http://santaclaraca.gov/index.aspx?page=2654&recordid=1277>. Accessed: May 12, 2015.

The trail that runs immediately adjacent to the Project site (on the Santa Clara side) is unpaved, while the trail on the eastern side (on the San José side) is paved and includes interpretive signage. Both the 8-mile San Tomas Aquino/Saratoga Creek Trail and Guadalupe River Trail connect to the regional Bay Trail, which links perimeter open space areas along San Francisco and San Pablo Bays.[26]

Table 3.13-3. Parkland in the City of Santa Clara

Park	Developed Acreage[a]	Unimproved/Open Space
Community Parks		
Central Park	45.0	—
Total Community Parks	*45.0*	—
Mini Parks		
Geof Goodfellow Sesquicentennial Park	0.2	—
Memorial Cross Park	0.3	—
Mid-Town Park (BAREC)	—	1.0
Rotary Park	0.2	—
War Memorial Playground	0.9	—
Total Mini/Pocket Parks	*1.6*	*1.0*
Neighborhood Parks		
Agnew Park	2.0	—
Bowers Park	8.5	—
Bracher Park	3.5	—
City Plaza Park	1.6	—
Earl R. Carmichael Park	8.3	—
Everett Alvarez Jr. Park	1.6	—
Fairway Glen Park	4.0	—
Former Kaiser Hospital Site	—	2.3
Fremont Park	4.3	—
Fuller Street Park	2.4	—
Henry Schmidt Park	7.5	—
Homeridge Park	4.3	—
Jenny Strand Park	9.7	—
Larry J. Marshall Park	7.2	—
Lick Mill Park	11.8	—
Live Oak Park	10.0	—
Machado Park	2.7	—
Mary Gomez Park	5.6	—
Maywood Park	7.0	—
Montague Park	5.7	—
Parkway Park	4.5	—
Steve Carli Park	1.6	—

[26] City of San José. n.d. *Guadalupe River*. Available: <http://www.sanjoseca.gov/index.aspx?nid=2833>. Accessed: April 23, 2015.

Table 3.13-3. Parkland in the City of Santa Clara

Park	Developed Acreage[a]	Unimproved/Open Space
Thamien Park	3.4	—
Warburton Park and Pool	4.0	—
Westwood Oaks Park	1.8	—
Total Neighborhood Parks	*123.0*	*2.3*
Recreation Facilities		
Reed Street Dog Park	1.7	—
Santa Clara Senior Center	2.1	—
Santa Clara Youth Soccer Park	11.0	—
Total Recreation Facilities	14.8	—
Public Open Space		
Agnews Historic Park, Mansion, and Auditorium	14.5	—
Civic Center Park	1.6	—
Ulistac Natural Area	—	40.1
Total Public Open Space	*16.1*	*40.1*
Recreational Trails	*3.7*	*3.9*
Joint Use Facilities		
Mission College Sports Complex	19.4	—
Elmer Johnson Field	5.1	—
Mission City Center for the Performing Arts	—	—
Montague Swim Center	2.5	—
Townsend Field	5.0	—
Washington Park Baseball Field	8.2	—
Steve Carli Park Sports Field	3.9	—
Skate Park	0.9	—
Teen Center	1.0	—
Walter E. Schmidt Youth Activity Center	1.5	—
Total Joint Use Facilities	*47.5*	—
Grand Total	*251.7*	*47.3*

Source: James Teixeira, Director of Parks and Recreation, City of Santa Clara. 2015. Response to Debby Fernandez, City of Santa Clara. March 12, 2015.

Notes:

[a.] Rounded to the nearest tenth.

The Ulistac Natural Area is located to the southeast of the Project site on Lick Mill Boulevard, between Tasman Drive and Montague Expressway. The Ulistac Natural Area consists of 41 acres of open space along the Guadalupe River and contains restored native grassland, riparian woodland, emergent wetlands, a bird and butterfly garden, and other habitat. Public access is provided from Lick Mill Boulevard and the Creekside trail along the Guadalupe River. There are no activity facilities, restrooms, or picnic facilities

within the Ulistac Natural Area; however, the trails within the park have interpretive panels to provide additional information on the natural history of the area.[27]

According to the City's General Plan, opportunities for additional regional open space within the City are limited because of its current build-out condition. Existing non-park open space, such as the Hetch-Hetchy Aqueduct right-of-way, east of Lafayette Street, and the City's retention basins (including the one at the Project site), have some potential to be enhanced as open space resources. However, several SCUSD facilities also serve the community, such as various sports fields including Townsend Field, Wilson Adult Education Fields, Cabrillo Middle School Fields, Lawrence Curtis School Field, Pomeroy School Field, and Washington Park Baseball Field. Continued recreational use of the facilities is subject to, and could be limited to, SCUSD needs. The City also uses three softball fields on the Mission College Campus by agreement. In addition, residents utilize sports recreation opportunities at the privately owned Pruneridge Golf Course.

As shown in Figure 3.13-1, the City parks nearest the Project site are the Santa Clara Youth Soccer Park, Ulistac Natural Area, Lick Mill Park, Fairway Glen Park, and Fuller Street Park. Regional recreation facilities nearest the Project site are the San Tomas Aquino Creek Trail and the Guadalupe River Trail. According to the City's General Plan, two neighborhood parks are planned near the Project site, one near the intersection of Tasman Drive/Lafayette Street, which is anticipated to be constructed between 2015 and 2025, and one near the intersection of Tasman Drive/Great America Parkway, which is anticipated to be constructed between 2025 and 2035.

Libraries

Library services are provided by the Santa Clara City Library (SCCL). The City is currently served by three libraries, the Central Park Library at 2635 Homestead Road, the Mission Library Family Reading Center at 1098 Lexington Street, and the Northside Branch Library at 695 Moreland Way (see Figure 3.13-1). In total, these facilities total approximately 104,770 sf. The State guidelines for libraries is 1 square foot of space per capita, and the State average for the number of full-time equivalent (FTE) per capita is 1 professional FTE per 3,429 per capita. With a service population of 119,075, the SCCL currently provides 0.88 square foot of library space per resident and one librarian FTE per 2,345 residents.[28] Therefore, the library-space-per-capita ratio in the City is below the State guidelines; the librarians-per-resident ratio exceeds the State guidelines.

California is one of 10 states that does not have formal library standards for collections or facilities. The SCCL currently has service goals of 3.0 book volumes per capita and 3.4 items (i.e., books and audio-visual volumes) per capita. The existing ratios are greater than the SCCL's service goals, because the SCCL currently has 3.22 book volumes per capita and 3.68 items per capita.

The Project site is served by the Northside Branch Library, which is a 17,000-square-foot building that includes a community room, group study areas, and a technology center.[29,30] The Northside Branch

[27] City of Santa Clara Parks and Recreation Department. n.d. *Ulistac Natural Area*. Available: <santaclaraca.gov/Modules/ShowDocument.aspx?documentid=6899>. Accessed: November 19, 2014.

[28] Keith, Hilary. City librarian, Santa Clara City Library. April 27, 2015—response to Debby Fernandez, City of Santa Clara.

[29] Santa Clara City Library. 2014. *Northside Branch Library.* Available: <http://library.santaclaraca.gov/index.aspx?page=2868>. Accessed: December 4, 2014.

[30] Keith, Hilary. City librarian, Santa Clara City Library. April 27, 2015—response to Debby Fernandez, City of Santa Clara.

Library contains 40,000 items, including books, movies, and digital collections. As of March 2015, the Northside Branch Library has been open for 6 months and is currently averaging 25,441 visitors per month. The projected annual attendance is 305,292.[31] Currently, the Northside Branch Library has sufficient facilities to meet existing local demand for library services. The Mission Library Family Reading Center is also planned for renovation.

Environmental Impacts

This section describes the impact analysis relating to public services for the Project. It describes the methods used to determine the impacts of the Project and lists the thresholds used to conclude whether an impact would be significant. Measures to mitigate (i.e., avoid, minimize, rectify, reduce, eliminate, or compensate for) significant impacts accompany each impact discussion.

Thresholds of Significance

In accordance with Appendix G of the State California Environmental Quality Act (CEQA) Guidelines, the Project would be considered to have a significant effect if it would result in any of the conditions listed below.

- Result in substantial adverse physical impacts associated with the provision of new or physically altered governmental facilities or a need for new or physically altered governmental facilities, the construction of which could cause significant environmental impacts, in order to maintain acceptable service ratios, response times, or other performance objectives for fire protection, police protection, schools, parks, or other public services and facilities;
- Increase the use of existing neighborhood or regional parks or other recreational facilities such that substantial physical deterioration of the facility would occur or be accelerated; or
- Include recreational facilities or require the construction or expansion of recreational facilities that might have an adverse physical effect on the environment.

Methods for Analysis

Potential impacts on public services are evaluated by (a) assessing the potential for the Project to increase demand for public services based on goals established by service providers and (b) comparing the ability of the service provider/public facility to serve the Project and accommodate the associated increase in demand. A determination is then made as to whether the existing facilities are capable of meeting the demand of the Project and, if not, if expansion of existing facilities could cause an adverse environmental effect. The analysis is based on the review of City documents and maps, field reconnaissance, and direct communications with City service providers. Potential impacts on public services resulting from potential Project population growth inducement in the City is discussed in Chapter 4, *Other CEQA Considerations*.

[31] Keith, Hilary. City librarian, Santa Clara City Library. April 27, 2015—response to Debby Fernandez, City of Santa Clara.

Scheme Analysis

Because of the different development schemes and intensities, the two proposed schemes (Scheme A and Scheme B) would result in different numbers of on-site employees and residents and different amounts of daytime versus nighttime population activity, as described in Section 3.12, *Population and Housing*. In terms of employment growth at the Project site, office uses would generate the most employees compared with retail, hotel, and residential uses. Scheme A would include more on-site housing and, therefore, more City residents and associated residential-based demands for public services. Scheme B would include more daytime employees and therefore higher employee-based demands for public services. Both are discussed, as appropriate, below.

Impacts and Mitigation Measures

Impact PS-1: Impacts on Fire Services and Facilities. The Project would not result in the need for new or physically altered fire service facilities beyond what is analyzed in this EIR. (LTS)

Operation of the Project would require additional SCFD fire services for the on-site residents, employees, and visitors to the Project site. As previously discussed, the SCFD considers current fire service in its jurisdiction to be adequate. However, the SCFD has indicated that demands associated with the Project would place a strain on current staffing levels, requiring additional resources to provide adequate fire and emergency medical service protection.[32]

The Project could retain the existing Fire Station 10 at its current location or require the relocation of the existing station on-site or off-site. If the existing station is not retained at its current location, it would be demolished after completion and occupancy of the new fire station, a temporary fire station would be operated on-site, or alternate arrangements would be made to ensure adequate fire service to the area during any period of unavailability of the existing fire station before the replacement fire station is operational.[33] Any proposed replacement facility would be the same size as the existing facility (7,364 gsf) and would accommodate the same number of firefighters (i.e., three). However, as discussed in more detail below, expansion in terms of personnel, and possibly equipment, would be necessary to maintain satisfactory service levels. Therefore, the fire station may need to be larger than its current size to accommodate such additional resources.

The replacement fire station would be located at one of three possible sites. One would be at its current location, in which case it would be integrated into the proposed City Center on Parcel 4. At its current location, the station would continue to be accessed from Stars and Stripes Drive. The second location (Option 1) would be in the northwest corner of Parcel 4, north of the proposed interior street (City Place Parkway), which would travel between Parcels 3 and 4. The station would be accessible from the future interior street and Great America Parkway. The third location (Option 2) would be off-site in the northern portion of the existing Convention Center surface parking lot, across San Tomas Aquino Creek and west of the Project site. This location, which is not owned by the City, would be accessible from the proposed roadway extension through this area and Great America Parkway. Figure 2-6 in Chapter 2, *Project Description*, shows the potential fire station locations. The environmental impacts of the

[32] Kelly, Bill. Fire chief. January 16, 2015—response to Debby Fernandez, City of Santa Clara.

[33] Even if the fire station is retained at its current location, there may be a need for a temporary fire station on-site or for temporary alternate arrangements to be made to ensure no interruption of service during construction in the vicinity of the existing fire station.

demolition and reconstruction of Fire Station 10 at the current location and the two other options are analyzed throughout this document.

Under Scheme A, the Project would generate new residents and employees at the Project site. The Project would result in approximately 3,270 new permanent residents living on the Project site (Parcels 4 and 5), which would increase the residential population within the SCFD service area to approximately 122,345 residents. Under Scheme A, a total of approximately 25,270 employees would work at the Project site by full build-out and occupancy in 2040 (as discussed in Section 3.12, *Population and Housing)*.[34] However, because approximately 510 employees would be displaced by the Project, implementation of the Project (Scheme A) would result in a net increase of approximately 24,760 employees. Therefore, under Scheme A, proposed employees and on-site residents would increase the typical daytime population within the SCFD service area to approximately 232,882 people (not including game days at Levi's Stadium).[35]

With 154 budgeted Suppression Division positions, the Project (Scheme A) would degrade the residential population ratio from 1.29 firefighters per 1,000 residents to 1.26 firefighters per 1,000 residents. With 154 budgeted Suppression Division positions, Scheme A would also degrade the daytime population ratio from 0.75 firefighter per 1,000 persons to 0.66 firefighter per 1,000 persons.

Under Scheme B, the Project would not generate new residents but would result in a net increase of approximately 28,720 employees. Therefore, under Scheme B, proposed employees would increase the typical daytime population within the SCFD service area to approximately 233,572 people (not including game days at Levi's Stadium). With 154 budgeted Suppression Division positions, Scheme B would similarly degrade the daytime population ratio to 0.66 firefighter per 1,000 persons. The residential population in the SCFD boundaries would not change with implementation of Scheme B.

As discussed above, the Project would degrade the existing ratios of firefighters to residents and to persons in the area during the daytime and would result in substantial new development of residential and commercial space. To maintain appropriate service and response times, in light of the increased demand in the area served by Fire Station 10,additional firefighters would need to be assigned to Fire Station 10. The replacement fire station may need to be larger than the existing Fire Station 10 to accommodate such additional resources.

Fire Station 10 currently includes standard Type 1 fire department apparatus, which is capable of pumping 1,500 gallons per minute, and one Type 6 fire engine, which is designated for Levi's Stadium. With implementation of the Project, Fire Station 10 would need to house an additional aerial ladder truck or aerial platform to ensure proper access to taller buildings on the Project site. In addition, a Hazardous Materials Response vehicle for monitoring the release of methane from the Santa Clara All-Purpose Landfill (Landfill) should be located on or near the Project site.[36] As a result, Fire Station 10 may need to be larger than proposed to accommodate additional personnel and equipment. For example, the replacement fire station could include three bays rather than two and be enlarged to approximately 10,000 gsf. As stated above, this EIR analyzes the construction of a replacement fire station with 7,364 gsf (same as existing) either on-site or at the Convention Center. The expansion of

[34] The following number of employees are projected to be generated by each parcel (approximately): 4,440 for Parcel 1, 8,000 employees for Parcel 2, 2,670 employees for Parcel 3, employees for Parcel 4, and 1,990 employees for Parcel 5.

[35] Game days are not included because the maximum demand for fire services would occur during weekday game days, which are infrequent and not representative of an average day in the City.

[36] Kelly, Bill. Fire chief. June 16, 2015—response to Debby Fernandez, City of Santa Clara.

replacement Fire Station 10 to a size greater than what is analyzed in this document would be minimal in relation to the construction of the overall Project and would not be expected to generate significant or new construction-related impacts beyond those analyzed throughout this EIR. No further environmental analysis would be needed for a potential expansion of replacement Fire Station 10.

In addition to an increase in calls for service to the Project site, the Project would place new structures and occupants on top of the Landfill, which is currently monitored by the SCFD. The SCFD has indicated that Landfill emergency response would depend on the type of incident and available access. The primary concern for Landfill-related emergencies is related to the management of methane gas. However, the new buildings on the Project site would be equipped with methane gas monitoring equipment, which is a regulatory requirement for post-closure landfill management under Title 27 of the California Code of Regulations. In addition, aerobic decomposition or chemical oxidation of waste materials in the Landfill could result in a subsurface fire, which could have a potentially significant impact on human health and property. According to the City, no underground fires caused by methane gas or control equipment have occurred during operation of the Landfill.[37] Section 3.11, *Hazards and Hazardous Materials*, includes Mitigation Measures HAZ-8.1 through HAZ-8.3 to reduce impacts related to subsurface fires. It is not expected that the construction of the proposed uses on top of a Landfill would require the need for additional SCFD personnel or equipment.

Upon Project completion, the SCFD would continue to serve the Project site and respond to calls for assistance from its existing and/or replacement facilities. The Project would degrade the existing service ratios due to additional on-site employees and residents. Additional personnel would need to be assigned to Fire Station 10 to provide sufficient fire and emergency medical service to the Project site and its occupants. The personnel could be accommodated within Fire Station 10, especially if it is expanded beyond its existing size, and additional facilities would not be necessary. Because the Project includes the potential relocation of the existing fire station (and the environmental impacts of this relocation/expansion are addressed in this EIR), the Project would not result in substantial adverse physical environmental impacts associated with the provision of other new or physically altered fire and emergency service facilities in order to maintain acceptable service ratios, response times, or other performance objectives. As such, the Project would result in a ***less-than-significant*** impact to fire services.

Impact PS-2: Impacts on Police Services and Facilities. The Project would not result in the need for new or physically altered police service facilities. (LTS)

The Project could affect the SCPD by intensifying site activity; adding new residents, employees, and visitors; increasing square footage; and increasing traffic incidents. Adding to the service population would lead to an overall increase in service calls to the SCPD. The Project is currently served by the SCPD headquarters at 601 El Camino Real.

As discussed above, the Project under Scheme A would result in approximately 3,270 new permanent residents living on the Project site, which would increase the residential population within the SCPD service area to approximately 122,345 residents. In addition, the Project, under Scheme A would generate a net increase of approximately 24,760 employees. Therefore, the proposed employees and on-site residents would increase the daytime population within the SCPD service area to approximately 232,882 people (not including game days at Levi's Stadium). With 145 existing sworn officers, the Project would degrade the residential population ratio from 1.22 officers per 1,000 residents to 1.19

[37] Staub, Dave. Deputy Director of Public Works. March 10, 2015—email response to Debby Fernandez, City of Santa Clara.

officers per 1,000 residents. The Project would also degrade the daytime population ratio from 0.71 officer per 1,000 persons to 0.62 officer per 1,000 persons.

As discussed above, the Project under Scheme B would result in no new residents, but would generate a net increase of approximately 28,720 employees. Therefore, the proposed employees would increase the daytime population within the SCPD service area to approximately 233,572 people (not including game days at Levi's Stadium). Therefore, Scheme B would similarly degrade the daytime population ratio to 0.62 firefighter per 1,000 persons.

Upon Project completion, the SCPD would continue to serve the Project site and respond to calls for assistance from its existing facilities. The SCPD would experience an increased call volume for emergency responses generated by the Project and the SCPD would need additional police officers and support staff to maintain its current level of service. As discussed, the Project would degrade the existing service ratios due to additional on-site employees and residents. This would require four additional personnel to maintain the existing officer-to-resident ratio.[38] The SCPD recently received approval to hire two officers and the SCPD plans to hire three additional officers as soon as the budget for those positions is available.[39] This is more officers than what would be needed to maintain the existing officer-to-resident service levels following full build-out of the Project site.

The need for additional officers and staff due to Project implementation could result in the need for additional equipment (e.g., radios, vehicles, computers) and a redesign of existing SCPD facilities to resolve capacity issues (e.g., the current locker rooms are at or near capacity).[40] However, the SCPD has no plans to add equipment or expand its current facility at 601 El Camino Real.[41] Although additional SCPD staff may be required, the Project would not trigger the need for the construction of a new police facility or the expansion of the existing one. In addition, the SCPD participates in a mutual aid agreement with the other law enforcement jurisdictions in Santa Clara County, which could provide services to the Project site, as needed. It is also expected that the proposed office uses and retail buildings would include private security, which would help reduce calls for service from the SCPD. Furthermore, the Project would not result in any impacts to the SCPD's response time objectives.[42] Therefore, the Project would not result in substantial adverse physical environmental impacts associated with the provision of new or physically altered police protection facilities in order to maintain acceptable service ratios, response times, or other performance objectives. As such, the Project would result in a ***less-than-significant*** impact to police protection.

Impact PS-3: Impacts on School Facilities. The Project would not result in the need for new or physically altered school facilities. (LTS)

As previously discussed, the Project site is served by George Mayne Elementary, Don Callejon K–8 School, and Wilcox High School, which are currently over capacity. The Project would result in the construction of up to 1,360 residential units on the Project site (under Scheme A). Based on generation rates provided by the SCUSD, households in Santa Clara average 0.104 elementary school student per household, 0.039

[38] To maintain the daytime ratio, approximately 20 additional police personnel would need to be hired. However, because the Project employees are not permanent residents and the service ratio goal focuses mainly on residents, the need for police personnel would not be substantial in order to serve the Project employees.

[39] Sellers, Michael. Police chief. March 25, 2015—response to Debby Fernandez, City of Santa Clara.

[40] Sellers, Michael. Police chief. March 25, 2015—response to Debby Fernandez, City of Santa Clara.

[41] Sellers, Michael. Police chief. March 25, 2015—response to Debby Fernandez, City of Santa Clara.

[42] Sellers, Michael. Police chief. June 23, 2015—response to Debby Fernandez, City of Santa Clara.

middle school student per household, and 0.048 high school student per household.[43] Using these metrics, the residential component of the Project (under Scheme A) would generate approximately 141 elementary school students, 53 middle school students, and 65 high school students.

As discussed above, the SCUSD currently has four closed school sites located in the City that could be used to serve new development throughout the City and help to improve capacity.[44] The SCUSD is planning to reopen the Central Park Elementary School site as an elementary school for the 2016-2017 school year. The SCUSD is also planning a new high school on the Agnews Developmental Center property. Central Park Elementary School and the new high school on the Agnews Developmental Center property are unlikely to serve the students generated by the Project. However, they would likely result in a redistribution of students in SCUSD facilities and potentially alleviate over-capacity issues at schools that would serve the Project. Alternatively, school attendance boundaries could be modified or modular classrooms could be used to accommodate the new students generated by the Project. Additionally, new school facilities are anticipated in north San José that would add more capacity when constructed for new students and reduce the number of students in SCUSD facilities. Students could also apply for an in-district transfer and attend a school outside their home attendance boundary if the requested school has capacity.

The Project would be subject to SB 50 School Impact Fees (established by the Leroy F. Greene School Facilities Act of 1998). As a result of the wide-ranging changes in the financing of school facilities, including the passage of State school facilities bonds intended to provide a major source of financing for new school facilities, Section 65996 of the State Government Code explains that payment of school impact fees established by SB 50 is deemed to constitute full and complete mitigation for school impacts from development that may be required from a developer by any State or local agency. Although the payment of the school impact fee by the Project Developer could contribute toward the construction or expansion of schools, any actual construction or expansion of school facilities would not be a direct result of the Project and would be required to undergo a separate CEQA review process.

For the reasons noted above, the Project would not trigger the need for expansion or construction of new schools, resulting in a ***less-than-significant*** impact.

Impact PS-4: Impacts on Parks and Recreation Facilities. The Project would not result in the need for new or physically altered parks and recreation facilities. (LTS)

Implementation of the Project could result in three types of impacts on parks and recreational facilities: (1) impacts associated with eliminating existing on-site active recreational facilities; (2) impacts associated with recreational demand from new residents and employees on existing off-site park and recreational facilities; and (3) the combined impacts associated with eliminating existing on-site active recreational facilities and impacts associated with recreational demand from new residents and employees. The analysis of these impacts is included below.

Elimination of Existing On-Site Active Recreational Facilities. Implementation of the Project would convert a public golf course, seven lighted tennis courts, and a BMX track into a new mixed-use development. As such, the Project would reduce the recreational facilities within the City and region. As explained above, the City inventory totals do not include the existing Santa Clara Golf & Tennis Club facility or the Santa Clara P.A.L. BMX site. Although not a community or neighborhood park by definition,

[43] Santa Clara Unified School District. 2014. Level 1 Developer Fees Justification Report. October.

[44] Healy, Michal. Bond program consultant, Santa Clara Unified School District. March 10, 2015—response to Debby Fernandez, City of Santa Clara.

the Project site has served as open space and a recreation facility for more than 25 years and is the largest contiguous park/open space in the City.[45]

Approximately 75,000 to 81,000 rounds are completed by golfers annually, approximately 180 people are members of the Sylvano Tennis Academy, and hundreds of people use the BMX track. Therefore, the Project would displace these recreational users who would most likely use other nearby facilities. However, the public would retain access to similar alternative resources within Santa Clara, San José, Sunnyvale, and Milpitas. This would result in the increase of use of these other facilities.

Because the golf course is open daily, 75,000 to 81,000 rounds per year equates to approximately 205 to 222 rounds per day. As shown in Table 3.13-2, there are approximately 39 golf courses within a 20-mile radius from the Project site. Assuming that players are distributed evenly among these facilities, up to six rounds would be added to each golf course per day. By design, golf courses are meant to accommodate foot traffic and concentrated public uses, and this relatively small increase in players at existing golf courses is not expected to result in substantial deterioration or a demand great enough to warrant construction of a new golf course.

Similarly, there are 114 tennis courts within a 5-mile radius of the Project site. Assuming that the 180 members of the Sylvano Tennis Academy would be displaced evenly to other tennis facilities, this would add an average of 1.6 people to each tennis facility. In addition, there are five BMX tracks within a 30-mile radius. The hundreds of BMX riders who use the current facility would be able to be accommodated at these five facilities because of their size and ability to accommodate large numbers of people. Therefore, although the tennis players and BMX participants would be displaced with implementation of the Project, the 114 existing tennis courts and five existing BMX tracks in the area would be able to accommodate these users.

The closure of the existing on-site recreational facilities, including the golf course, tennis courts, and BMX track, would force users to seek alternative recreational venues in the area. However, the current on-site facilities are slightly underutilized and if the users are distributed evenly, the large number of other existing venues, including golf courses, would have capacity to accommodate these users. Although the Project would increase the use of other existing recreational facilities due to the closure of the on-site golf course, tennis courts, and BMX track, this is not expected to have a substantial physical deterioration of the facilities, resulting in a ***less-than-significant*** impact.

Increased Use of Off-site Parks and Recreational Facilities due to New Residents/Employees. Implementation of the Project would also contribute to an increased demand for parkland because the Project would result in approximately 3,270 new permanent residents living on the Project site and 24,760 employees (under Scheme A). No permanent residents would be generated by Scheme B, but approximately 28,720 employees would be added.

New residents and employees could use the nearby park facilities, such as Fairway Glen Park, the Santa Clara Youth Soccer Park, the Ulistac Natural Area, the San Tomas Aquino/Saratoga Creek Trail, and the Guadalupe River Trail. These parks and trails with benches, pathways, and other socializing and exercise spaces could attract employees during lunch breaks and/or after work because of proximity as well as the new Project residents. However, the Project would provide on-site amenities such as entertainment facilities and large, shared open spaces throughout the Project site, which would reduce the likelihood of residents and employees utilizing or overburdening existing City facilities because outdoor areas would be available to employees and residents closer to the existing open space areas mentioned above. Of the total

[45] Teixeira, James. Director of Parks and Recreation. March 24, 2015—response to Debby Fernandez, Santa Clara Planning Department.

proposed landscaped areas, approximately 74 acres would be devoted to public open space, which would include parks (approximately 26 acres, potentially dedicated to the City and utilized for picnic areas, gardens, trails, and landscaped and furnished quiet park areas), slope landscaped and habitat areas, courtyards, and multi-purposed concourses. In addition to the park and open space dedicated to the City, approximately 5 acres in private open space would be provided within the residential occupied podiums.

The Mitigation Fee Act dedication standard is 2.53 acres per 1,000 residents. As previously discussed, the City does not currently meet this standard. Given that the Project would result in up to approximately 3,270 new permanent residents living on the Project site, the Project would be required to dedicate 8.27 acres of parkland, in accordance with the Mitigation Fee Act.[46] The actual parkland and facilities required would be determined during the approval process.

In addition, according to the City's General Plan, a neighborhood park is planned near the Project site that could serve Project residents and employees near the intersection of Tasman Drive/Lafayette Street with future development of Tasman East.

To the extent that the Project Developer is not able to fully satisfy the park requirement using land dedication or on-site private open space credits, the Project Developer would pay park in-lieu fees to satisfy the City's parkland dedication requirement. The City has determined that payment of in-lieu fees represents full and complete mitigation for parkland impacts due to new development. The fees paid by the Project Developer would be used by the City to acquire and/or develop new parkland and/or amenities or facilities and mitigate any environmental impacts from the development of those facilities. Any new facilities would be subject to subsequent project-level CEQA review by the proposing public agency. However, in general, the construction and operation of neighborhood parks would not be expected to result in any significant environmental effects. Therefore, the new permanent residents and employees generated by the Project would result in a ***less-than-significant*** impact related to parks.

Total Project Impact to Parks and Recreational Facilities. Implementation of the Project would result in the combined impacts of eliminating existing on-site active recreational facilities plus the recreational demand from new residents and employees. As explained above, implementation of the Project would convert a public golf course, seven lighted tennis courts, and a BMX track into a new mixed-use development. As such, the Project would reduce the recreational facilities within the City and region. Implementation of the Project would also contribute to an increased demand for parkland because the Project would result in approximately 3,270 new permanent residents living on the Project site and 24,760 employees (under Scheme A). No permanent residents would be generated by Scheme B, but approximately 28,720 employees would be added. Similar to the recreational users who would be displaced by the Project, new residents and employees would most likely use other nearby facilities as well as access similar alternative resources within Santa Clara, San José, Sunnyvale, and Milpitas. This would result in the increase of use of these other facilities. However, the current on-site facilities are slightly underutilized, and if the users are distributed evenly, the large number of other existing venues, including golf courses, would have capacity to accommodate these users. Although the Project would increase the use of other existing recreational facilities due to the closure of the on-site golf course, tennis courts, and BMX track, as well as generate new park and recreational users, this is not expected to result in a substantial physical deterioration of the facilities or result in the need to construct new recreational facilities. In addition, recreational space would be included within the Project site, plus any fees paid by the Project Developer would be used by the City to acquire and/or develop new parkland and/or amenities or facilities and mitigate any environmental impacts from the development of those

[46] Teixeira, James. Director of Parks and Recreation. March 12, 2015—response to Debby Fernandez, Santa Clara Planning Department. The acreages were revised slightly to reflect the approximately 3,270 new permanent residents.

facilities. Therefore, the combination of the conversion of the on-site recreational facilities into a new mixed-use development, and the new permanent residents and employees generated by the Project, would result in a ***less-than-significant*** impact related to parks.

Impact PS-5: Impacts on Library Facilities. The Project would not result in the need for new or physically altered library facilities. (LTS)

The Project would result in up to approximately 3,270 new permanent residents living on the Project site (under Scheme A), which would add to the existing SCCL service population of 119,075 residents, for a total of 122,345 residents. As discussed above, the City's libraries have a wide range of resources that are accessible by the community, including 104,770 sf of libraries, 50.77 librarian FTEs, 390,357 books, and 446,123 total items. The residents generated by the Project would slightly degrade the library-space-per-resident ratio from 0.88 sf of library space per resident to 0.86 sf of library space per resident. In addition, the Project would slightly degrade the librarian-FTE-per-resident ratio from one librarian FTE per 2,345 residents to one librarian FTE per 2,410 residents. Furthermore, the Project would also degrade the existing book-volumes-per-capita ratio from 3.28 book volumes per capita to 3.19 book volumes per capita as well as the library-items-per-capita ratio from 3.74 items per capita to 3.65 items per capita.

The Project would further degrade the State average for the library-space-per-resident ratio to a level that would be below the State average of 1 square foot of space per capita. In addition, the Project residents would result in the librarian-FTE-per-resident ratio falling below the State average of one FTE per 3,429 residents. However, the Project would not degrade the book-volume-per-capita ratio below SCCL's service goal of 3.0 book volumes per capita or and SCCL's service goal of 3.4 items per capita.

According to the City's General Plan EIR, future growth in the City may require additional library facilities.[47] Given that the City is mostly built out, any new library facilities would most likely be located on existing urban parcels. Approximately 10,900 more volumes and 12,700 more library items would be needed to maintain the existing book-volumes-per-capita ratio of 3.28 book volumes per capita and the library-items-per-capita ratio of 3.74 items per capita due to the Project. The additional volumes and library items would not necessitate the construction of a new library facility. Therefore, the Project would not result in substantial adverse physical environmental impacts associated with the provision of new or physically altered library facilities in order to maintain acceptable service ratios or other performance objectives. As such, the Project would result in a ***less-than-significant*** impact to libraries.

Cumulative Impacts

The geographic context for the analysis of cumulative public service impacts is the service area of the service in question. The geographic context for cumulative impacts related to fire protection, police service, park/recreational facilities, and libraries is the City because these services are provided on a citywide basis, and service ratios by which demand is estimated are based on citywide figures. The cumulative analysis for impacts on schools would include the communities served by the SCUSD, which serves all of Santa Clara, the eastern portion of Sunnyvale, the northern portion of San José, all of Alviso, the northeastern portion of Cupertino, and the western portion of Milpitas.

[47] City of Santa Clara. 2011. City of Santa Clara Draft 2010–2035 General Plan: Integrated Final Environmental Impact Report. January 2011.

This cumulative analysis examines the effects of the Project in the relevant geographic area in combination with other current projects, probable future projects, and projected future growth.

Impact C-PS-1: Cumulative Public Service Impacts. The Project, in combination with other foreseeable development in the city, would not result in the need for new or physically altered public service facilities. (LTS)

Fire Services

Development in the City, which is the service area for the SCFD, would result in increased demand for fire and emergency services. The majority of the development would increase the intensity of the former land use or change the land use, which would result in an increase in demand for fire services. According to the City's General Plan EIR, existing fire facilities would have the capacity to absorb the additional fire personnel required to accommodate planned growth in the 2010–2035 General Plan.[48] The General Plan did not consider development of the Project site. In addition, the Tasman East project, listed in Table 3.0-1, would result in an additional 1,820 units that were not anticipated in the General Plan. As such, the unanticipated growth would place additional burdens on the SCFD that could result in the need for new facilities. Construction of new facilities could result in environmental impacts. As such, construction of new facilities to serve future growth that was not anticipated in the general plan could result in a significant cumulative environmental impact.

As discussed above, the Project could retain the existing Fire Station 10 at its current location or require relocation of the station on-site or off-site. Expansion in terms of personnel, and possibly equipment, would be necessary to maintain satisfactory service levels as a result of the Project. Therefore, the fire station may need to be larger than its current size to accommodate such additional resources. The analysis above determined that the Project could require additional personnel to maintain the existing firefighter-to-daytime-population ratio. The personnel could be accommodated within Fire Station 10, especially if it is expanded beyond its current size; additional facilities would not be necessary. To maintain appropriate response times and ratios, existing SCFD firefighters could also be shifted such that additional firefighters are assigned to Fire Station 10. Because the Project includes the potential relocation of an existing fire station (the environmental impacts of this relocation/expansion are addressed in this EIR), the Project would not contribute to cumulative impacts, resulting in a ***less than cumulatively considerable*** contribution to this cumulative impact.

Police Services

Development in the City, which is the service area for the SCPD, would result in increased demand for police services. The majority of the development would increase the intensity of a former land use or change the land use, which would result in additional demand for police services. According to the City's General Plan EIR, existing facilities would house any additional officers required to accommodate growth in the city.[49] However, the General Plan did not consider development of the Project site. In addition, the Tasman East project, listed in Table 3.0-1, would result in an additional 1,820 units that were not anticipated in the General Plan. As such, the unanticipated growth would place additional burdens on the SCPD that could result in the need for new facilities. Construction of new facilities could

[48] City of Santa Clara. 2011. City of Santa Clara Draft 2010–2035 General Plan: Integrated Final Environmental Impact Report. January.

[49] City of Santa Clara. 2011. City of Santa Clara Draft 2010–2035 General Plan: Integrated Final Environmental Impact Report. January.

result in environmental impacts. As such, construction of new facilities to serve future growth that was not anticipated in the general plan could result in a significant cumulative impact.

The Project would require four additional officers to maintain the existing officer-to-resident ratio. The SCPD recently received approval to hire two officers, and the SCPD plans to hire three additional officers as soon as the budget for those positions is available.[50] This is more officers than what would be needed to maintain the existing officer-to-resident service levels following full build-out of the Project site. The need for additional officers and staff would result in the need for additional equipment (e.g., radios, vehicles, computers) and a redesign of existing SCPD facilities to resolve capacity issues (e.g., the current locker rooms are at or near capacity).[51] The SCPD has no existing or near-future plans to add equipment or expand its current facility at 601 El Camino Real.[52] Therefore, although additional SCPD staff members may be required, the Project plus cumulative development would not trigger the need for the construction of a new police facility, the construction of which would cause significant environmental impacts. Therefore, the Project would have a ***less than cumulatively considerable*** contribution to this cumulative impact.

School Facilities

The geographic context for an analysis of cumulative school impacts is the area served by the SCUSD. Future housing projects in this area would generate additional students that would need to be accommodated within the school district. Other current projects would be reviewed on a case-by-case basis during their respective development. In addition, as previously discussed, Section 65996 of the State Government Code explains that payment of school impact fees, as established by SB 50, is deemed to constitute full and complete mitigation for school impacts. The SCUSD enacted development fees in accordance with the Leroy F. Greene School Facilities Act and levies these fees on development projects within its service area. Other projects would be required to pay school impact fees, which are based on the amount of proposed residential and commercial space. This process and fee payment would ensure that citywide growth would be reasonably accommodated within the cumulative context. Therefore, cumulative impacts are considered ***less than significant***.

Parks and Recreational Facilities

Other current development, including the Project, would comply with Santa Clara City Code Chapter 17.35, which requires new residential development to provide adequate park and recreational land and/or pay a fee in-lieu of dedication to mitigate the impacts of new growth. Therefore, other current development is not expected to result in a significant cumulative impact related to parks and recreation. Therefore, with the provision of adequate park and recreational land within the Project site and/or payment of a fee in lieu of dedication, the cumulative impacts would be considered ***less than significant***.

Library Facilities

Development in this service area would place additional demand on library services. According to the City's General Plan EIR, future growth in the City may require additional library facilities.[53] However, the

[50] Sellers, Michael. Police chief. March 25, 2015—response to Debby Fernandez, City of Santa Clara.

[51] Sellers, Michael. Police chief. March 25, 2015—response to Debby Fernandez, City of Santa Clara.

[52] Sellers, Michael. Police chief. March 25, 2015—response to Debby Fernandez, City of Santa Clara.

[53] City of Santa Clara. 2011. City of Santa Clara Draft 2010–2035 General Plan: Integrated Final Environmental Impact Report. January.

General Plan did not consider development of the Project site. In addition, the Tasman East project, listed in Table 3.0-1, would result in an additional 1,820 units that were not anticipated in the General Plan. Other current development in combination with ambient growth would, without construction of new libraries or expansion of existing libraries, reduce the amount of library square footage per capita, the number of FTE librarians per capita, the number of books per capita, and the number of library items per capita, below existing ratios. As such, future cumulative development would place additional burdens on the City's library facilities, which could result in the need for new facilities. Construction of new facilities could result in environmental impacts. As such, construction of new facilities to serve future cumulative development could result in a significant environmental impact.

The residents generated by the Project would slightly reduce the ratio for library space per resident, from 0.88 square feet per resident to 0.86 square feet. In addition, the Project would slightly reduce the ratio for librarian FTE per resident, from one librarian FTE per 2,345 residents to one librarian FTE per 2,410 residents. Furthermore, the Project would reduce the ratio for existing book volumes per capita, from 3.22 book volumes per capita to 3.13 book volumes per capita, as well as the ratio of library items per capita, from 3.68 items per capita to 3.58 items per capita. The Project would result in the construction of up to 1,360 residential units on the Project site (under Scheme A). Cumulative development within this service area (within the City of Santa Clara) would result in approximately 7,463 units in the Tasman East Project and the Lawrence Station Area Project. Therefore, the Project plus cumulative development would not substantially contribute to the need for a new library facility, the construction of which would cause significant environmental impacts. Therefore, the Project would have a ***less than cumulatively considerable*** contribution to this cumulative impact.

3.14 Utilities and Service Systems

This section describes the existing utilities and service systems that serve the Project site and its vicinity. It also describes the significant impacts on utilities and service systems that would result from implementation of the Project and feasible mitigation measures that would reduce those significant impacts. The utilities and service systems addressed in this section include water supply, wastewater, solid waste, and energy. The analysis is based on the *City of Santa Clara 2010–2035 General Plan* (General Plan) and its Environmental Impact Report (EIR) and the City of Santa Clara 2010 Urban Water Management Plan (UWMP). Additional information on the Project's potential impacts on utilities and service systems is provided in the following documents, all of which are on file at the City: *Preliminary Infrastructure Master Plan for City Place Santa Clara* (June 30, 2015), *Water Technical Memorandum for City Place Santa Clara Development* (May 1, 2015), *Domestic Water Technical Memorandum for City Place Santa Clara Development* (May 1, 2015), and *Sanitary Sewer Technical Memorandum for City Place Santa Clara Development* (August 24, 2015), all prepared by Langan Treadwell Rollo. In addition, the results of the Water Supply Assessment (WSA), (Appendix 3.14) prepared by the City for this Project, are incorporated into this section.

Issues identified in response to the Notice of Preparations (NOPs) (Appendix 1) were considered in preparing this analysis. The NOP comments pertained to securing underground utilities, new energy facilities, solid waste generation, and water supply and demand.

Existing Conditions

Regulatory Setting

State

Urban Water Management Planning Act

California State Assembly Bill (AB) 797 (California Water Code Section 10610, et. seq.), adopted in 1983, requires that every urban water supplier providing water for municipal purposes to more than 3,000 customers or more than 3,000 acre-feet of water on an annual basis prepare a UWMP. The intent of the UWMP is to assist water supply agencies in water resource planning given their existing and anticipated future demands. UWMPs must be updated every five years in years ending in 0 and 5.

Senate Bill 610

Senate Bill (SB) 610 requires that certain large projects subject to the California Environmental Quality Act (CEQA) and supplied with water from a public water system that identifies groundwater as a source prepare a specified WSA. The WSA must be furnished to the local government for inclusion in any environmental documentation for certain projects (as defined in Water Code 10912[a]) subject to CEQA. This legislation also expands the requirements for certain types of information in a UWMP, including an identification of any existing water supply entitlements, water rights, or water service contracts held relevant to the WSA for a proposed project, and a description of water deliveries received in prior years. A WSA has been prepared for the Project.

Executive Order B-29-15

Effective April 1, 2015, Executive Order B-29-15 proclaimed that the provisions contained in Governor Brown's January 17, 2014, Proclamation; April 25, 2014, Proclamation; and Executive Orders B-26-14 and B-28-14, which direct State officials to take necessary actions to prepare for drought conditions, remain in full force, with some modifications. Governor Brown's January 17, 2014, Proclamation declared a State of Emergency and directed State officials to take all necessary actions to prepare for drought conditions. The April 25, 2014, Proclamation is an executive order that strengthened the State's ability to manage water and habitat effectively in drought conditions and called on Californians to redouble their efforts to conserve water. Executive Order B-26-14 streamlined efforts to provide water to families in dire need. Executive Order B-28-14 extended the waiver of CEQA and Water Code Section 13247 in paragraph 9 of the January 17, 2014, Proclamation. In addition, paragraph 19 of the April 25, 2014, Proclamation has been extended through May 31, 2016.

One of the additional modifications to the executive orders and proclamations noted above concerns the water restrictions imposed by the State Water Resources Control Board (State Water Board) to achieve a statewide 25 percent reduction in potable urban water usage through February 28, 2016. These restrictions will require water suppliers to California's cities and towns to reduce usage as compared to the amount used in 2013.

Senate Bill X7-7 2009 (Water Conservation Act of 2009)

Effective January 1, 2010, SB X7-7 requires the State to achieve a 20 percent reduction in urban per capita water use by December 31, 2020. In addition, SB X7-7 requires agricultural water management plans and efficient water management practices for agricultural water suppliers, and promotes expanded development of sustainable water supplies at the regional level. The portion of SB X7-7 focused on urban water management establishes processes for urban water suppliers to meet the statewide water conservation targets. Furthermore, SB X7-7 requires Department of Water Resources (DWR) review and reporting on urban water management plans; creates a Commercial, Industrial, and Institutional Task Force to develop best management practices (BMPs) for water use in this sector; requires that DWR promote implementation of regional water resource management practices through increased incentives; and requires that DWR in consultation with the State Water Board develop or update statewide targets for recycled water, brackish groundwater desalination, and urban stormwater runoff.

Senate Bill 221

SB 221 prohibits approval of subdivisions consisting of more than 500 dwelling units unless there is verification of sufficient water supplies for the project from the applicable water supplier(s). This requirement also applies to increases of 10 percent or more of service connections for public water systems with fewer than 500 service connections. The law defines criteria for determining "sufficient water supply" such as using normal, single-dry, and multiple-dry year hydrology and identifying the amount of water that the suppler can reasonably rely on to meet existing and future planned use.

California Integrated Waste Management Act

The California Integrated Waste Management Act (CIWMA), AB 939, passed in September 1989, requires every city and county in the State to prepare a Source Reduction and Recycling Element with its Solid Waste Management Plan that identifies how each jurisdiction will meet the mandatory State diversion goals of 25 percent by 1995 and 50 percent by 2000. The intent of AB 939 is to facilitate solid waste reductions, recycling, and reuse to the greatest extent possible. The bill imposes fines of up to $10,000 per day on cities and counties for non-compliance in meeting the goals and timelines set forth in AB 939.

Title 24

Buildings constructed after June 30, 1977, must comply with standards identified in Title 24 of the California Code of Regulations. Title 24 requires the inclusion of state-of-the-art energy conservation features in building design and construction, including the incorporation of specific energy-conserving design features, use of non-depletable energy resources, or a demonstration that buildings would comply with a designated energy budget. Part 11 of the Title 24 Building Standards Code is referred to as the California Green Building Standards Code (CALGreen Code). Unless otherwise noted in the regulation, all newly constructed buildings in California are subject to the requirements of the CALGreen Code.

Local

Santa Clara County Integrated Waste Management Plan

As described above, the existing CIWMA of 1989, administered by the California Integrated Waste Management Board, establishes an integrated waste management program. Each State agency must develop and adopt, in consultation with the Board, an integrated waste management plan (IWMP). The County's plan was approved by the Board in 1996. Since that time it has undergone two 5-year reviews. The jurisdictions covered in the County's plan are the cities of Campbell, Cupertino, Gilroy, Morgan Hill, Los Altos, Los Altos Hills, Los Gatos, Milpitas, Monte Sereno, Mountain View, Palo Alto, San José, Santa Clara, Saratoga, Sunnyvale, and the unincorporated areas of the County. Each jurisdiction has a diversion requirement of 50 percent for 2000 and each year thereafter. The City's diversion rate is based on a daily generation rate, expressed in terms of pounds/person/day. The target rate is equivalent to the 50 percent diversion requirement for 2000 and each year thereafter.

City of Santa Clara Climate Action Plan

The City of Santa Clara adopted a Climate Action Plan (CAP) in December 2013. The CAP outlines the City's efforts to reduce greenhouse gas (GHG) emissions consistent with the Bay Area Air Quality Management District's (BAAQMD's) CEQA Guidelines and larger statewide GHG reduction goals. The CAP estimates current (2008) and future (2020 and 2035) GHG emissions generated by community activities and sets a GHG reduction goal of 15 percent below 2008 emissions levels by 2020.[1] Measures to achieve this target are identified and focus on energy efficiency, renewable energy, water conservation, waste reduction, off-road equipment, and transportation and land use. The City's CAP includes the following goals and measures relevant to utilities and service systems.

Goal. Eliminate coal from Silicon Valley Power's[2] (SVP's) portfolio and increase use of natural gas and renewable energy.

Measure 1.1. Coal-free by 2020: Replace the use of coal in SVP's portfolio with natural gas by 2020.

Measure 1.2. Renewable energy resources: Investigate the use of City-owned property for large-scale renewable energy projects.

Goal. Maximize the efficient use of energy throughout the community.

Measure 2.1. Community electricity efficiency: Achieve City-adopted electricity efficiency targets to reduce community-wide electricity use by 5% through incentives, pilot projects, and rebate programs.

---

[1] The CAP also mentions a potential target for 2035 of 55 percent below baseline levels, but the 2035 target has not been adopted by the City to date.

[2] SVP is the City's electric utility.

Measure 2.4. Customer-installed solar: Incentivize and facilitate the installation of 6 megawatts (MW) of customer-owned residential and nonresidential solar photovoltaics (PV) projects.

Goal. Reduce GHG-intensive water use practices.

Measure 3.1. Urban Water Management Plan targets: Meet the water conservation goals presented in the 2010 Urban Water Management Plan to reduce per capita water use by 2020.

Goal. Increase recycling opportunities for all disposed materials.

Measure 4.2. Increased waste diversion: Work with regional partners to increase solid waste diversion to 80% through increased recycling efforts, curbside food waste pickup, and construction and demolition waste programs.

Goal. Mitigate the heat island effect through shading and cooling practices.

Measure 7.2. Urban cooling: Require new parking lots to be surfaced with low-albedo materials to reduce heat gain, provided it is consistent with the Building Code.

City of Santa Clara Recycling Programs

The City has in place a Single-Family Recycling Program, a Multi-Family Recycling Program, and a Commercial Recycling Program. Residences and businesses are required to comply with the applicable programs. Each program specifies which materials are acceptable for recycling as well as preparation and sorting requirements.

Santa Clara Valley Water District

The Santa Clara Valley Water District (SCVWD) is responsible for managing the County's water supply, including groundwater, as well as overseeing flood protection. Its jurisdiction encompasses streams and creeks, underground aquifers, and SCVWD-built reservoirs.

City of Santa Clara General Plan

General Plan policies related to hydrology and water quality (such as stormwater policies) are outlined in Section 3.10, *Hydrology and Water Quality*, and are not reproduced here. The City's current General Plan[3] includes the following goals and policies associated with utilities and service systems.

Goal 5.10.1-G3. Adequate solid waste disposal capacity through effective programs for recycling and composting.

Goal 5.10.1-G4. Adequate wastewater treatment and conveyance capacities.

Policy 5.10.1-P6. Require adequate wastewater treatment and sewer conveyance capacity for all new development.

Policy 5.10.1-P7. Encourage the use of local recycling facilities to divert waste from landfills.

Policy 5.10.1-P8. Increase to 80 percent reduction for solid waste tonnage by 2020, or as consistent with the CAP.

Policy 5.10.1-P9. Encourage curbside recycling and composting of organic and yard waste.

[3] City of Santa Clara. 2010. *City of Santa Clara 2010–2035 General Plan*. Adopted November 16, 2010. Last amended December 9, 2014. Available: http://santaclaraca.gov/index.aspx?page=1263. Accessed: February 9, 2015.

Policy 5.10.1-P11. Require use of native plants and wildlife-compatible non-native plants, when feasible, for landscaping on City property.

Policy 5.10.1-P12. Encourage property owners and landscapers to use native plants and wildlife-compatible nonnative plants, when feasible.

Goal 5.10.3-G1. Energy supply and distribution maximizes the use of renewable resources.

Goal 5.10.3-G2. Implementation of energy conservation measures to reduce consumption.

Policy 5.10.3-P1. Promote the use of renewable energy resources, conservation and recycling programs.

Policy 5.10.3-P2. Transition away from using coal as an energy source to renewable resources by replacing coal in Silicon Valley Power's portfolio, exploring City owned property for renewable energy projects, developing solar projects, and incentivizing solar projects for residents and businesses, consistent with the CAP.

Policy 5.10.3-P3. Maximize the efficient use of energy throughout the community by achieving adopted electricity efficiency targets and promoting natural gas efficiency, consistent with the CAP.

Policy 5.10.3-P4. Encourage new development to incorporate sustainable building design, site planning and construction, including encouraging solar opportunities.

Policy 5.10.3-P5. Reduce energy consumption through sustainable construction practices, materials and recycling.

Policy 5.10.3-P6. Promote sustainable buildings and land planning for all new development, including programs that reduce energy and water consumption in new development.

Policy 5.10.3-P7. Encourage installation of solar energy collection through solar hot water heaters and photovoltaic arrays.

Policy 5.10.3-P8. Provide incentives for LEED certified, or equivalent development.

Policy 5.10.3-P9. Incorporate criteria for sustainable building and solar access into the City's ordinances and regulations.

Policy 5.10.3-P11. Continue innovative energy programs to develop cost effective alternative power sources and encourage conservation.

Policy 5.10.3-P12. Work with Silicon Valley Power to implement adequate energy distribution facilities to meet the demand generated by new development.

Policy 5.10.3-P13. Work with Pacific Gas and Electric to ensure an adequate supply of natural gas to meet the demand generated by new development.

Policy 5.10.3-P14. Explore opportunities for alternative energy "fueling stations" and promote participation in shuttle services that use new technology vehicles to reduce greenhouse gas emissions.

Goal 5.10.4-G1. A reliable, safe supply of potable water adequate to meet present and future needs.

Goal 5.10.4-G3. A reduction in the demand and consumption of water resources.

Policy 5.10.4-P1. Promote water conservation through development standards, building requirements, landscape design guidelines, education, compliance with the State Water Conservation Landscaping Ordinance and other applicable City-wide policies and programs.

Policy 5.10.4-P2. Expand water conservation and reuse efforts throughout the City in order to meet the conservation goals in the City's adopted Urban Water Management Plan and CAP to reduce per capita water use by 2020.

Policy 5.10.4-P3. Promote water conservation, recycled water use and sufficient water importation to ensure an adequate water supply.

Policy 5.10.4-P4. Require an adequate water supply and water quality for all new development.

Policy 5.10.4-P5. Prohibit new development that would reduce water quality below acceptable State and local standards.

Policy 5.10.4-P6. Maximize the use of recycled water for construction, maintenance, irrigation and other appropriate applications.

Policy 5.10.4-P7. Require installation of native and low-water-consumption plant species when landscaping new development and public spaces to reduce water usage.

Policy 5.10.4-P8. Require all new development within a reasonable distance of existing or proposed recycled water distribution systems to connect to the system for landscape irrigation.

Policy 5.10.4-P9. Work with Santa Clara Valley Water District to improve the Santa Clara Distributary.

Policy 5.10.4-P10. Work with Santa Clara Valley Water District to minimize undesirable compaction of aquifers and subsidence of soils.

Environmental Setting

Water Demand, Supply, Treatment, Storage, and Distribution and Conveyance

Water Demand

Existing Water Demand in the City.[4] The City regularly evaluates its retail water supplies by preparing and updating a UWMP every five years. Santa Clara City Council approved and adopted a UWMP in 2011 (the 2010 UWMP, which replaced the 2005 UWMP). The 2010 UWMP was prepared to ensure proper coordination of long-term land use planning and water supply planning regarding the water demand associated with the growth anticipated in the City's General Plan. The 2010 UWMP projections assume that, compared to 2010, City water demand will grow by more than 8,000 acre-feet by 2015, a 35 percent increase. However, according to the WSA, the City's actual water demand since 2010 has not reflected the growth in water consumption assumed in the 2010 UWMP. If, according to the WSA, future water deliveries follow the same growth rate as in the actual water deliveries for 2010–2012, it is anticipated that, by the end of 2015, overall water deliveries will be significantly less than the levels projected in the 2010 UWMP. The 2005 UWMP projections overestimated the City's 2010 water use by more than 7,770 acre-feet per year (afy) (actual 2010 use of 23,213 afy versus projected use of 30,986 afy). However, as shown in Table 3.14-1, the 2010 UWMP estimates that the City's demand will rapidly increase after 2010 and eventually approach the levels projected for 2030 in the 2005 UWMP.

[4] City of Santa Clara Water and Sewer Utilities. 2015. *City Place Development Application: Water Supply Assessment for Compliance with California Water Code Section 10910*. June 10.

Table 3.14-1. Projected Water Demand in the City based on the 2005 UWMP and 2010 UWMP, 2010–2035[a]

	2010	2015	2020	2025	2030	2035
2005 UWMP	30,986	32,559	34,004	35,254	36,337	NA
2010 UWMP	23,213	31,259	33,053	34,605	36,071	37,433
Change	**(7,773)**	**(1,300)**	**(951)**	**(649)**	**(266)**	**NA**

Source: City of Santa Clara Water and Sewer Utilities. 2015. *City Place Development Application: Water Supply Assessment for Compliance with California Water Code Section 10910*. June 10.
Note:
[a] acre-feet.
NA = not applicable

Table 3.14-1 shows that following a large assumed demand increase of more than 8,000 afy by 2015, the demand estimates in the 2010 UWMP approximate the demand levels and trends projected in the 2005 UWMP. By 2030, the last projection year in the 2005 UWMP, the difference between the projected demand levels in the 2005 UWMP and the 2010 UWMP is only 266 afy.[5]

The 2010 UWMP assumption that the City's demand will eventually approximate the 2005 UWMP projection levels appears to be highly conservative because the 2005 projections are known to have significantly overstated actual City demand in 2010. According to the WSA, actual water demand after the 2010 UWMP was adopted has also been significantly below the rate of growth projected for the 2010 to 2015 period, as shown in Table 3.14-2.

Table 3.14-2. Actual City Potable Water Deliveries and System Losses Compared with Projected Water Deliveries[a]

	2010	2011	2012	2013	2014
Actual Water Deliveries	20,806	20,687	21,193	21,675	19,800
Projected Water Deliveries, 2010 UWMP	20,806	22,097	23,387	24,677	25,968
Difference	**--**	**(1,410)**	**(2,194)**	**(3,002)**	**(6,168)**

Source: City of Santa Clara Water and Sewer Utilities. 2015. *City Place Development Application: Water Supply Assessment for Compliance with California Water Code Section 10910*. June 10. Table 10.
Notes: Includes water deliveries and system losses reported by the City and excludes recycled water use.
[a] acre-feet per year.

Reflecting these results, WSAs prepared and approved by the City since the 2010 UWMP was adopted have concluded that "overall system demand is significantly lower than … projected by the 2010 UWMP" and that "overall, the [City's] water demands are less than projected by the End Use model."[6] Empirical data since 2005 provides substantial evidence that the model used to prepare the 2010 UWMP generates conservative projections that are significantly higher than actual City water use over time.[7]

[5] 3515 Monroe Street WSA approved by City Council Resolution #13-8090 on December 3, 2013, Appendix E.
[6] See, for example, (a) the 3700 El Camino Real WSA approved by City Council Resolution # 13-8031 on April 23, 2013, Page 14; (b) the 3000 Bowers Avenue WSA approved by City Council Resolution # 12-7963 on August 28, 2012, page 13; and (c) the 2200 Lawson Lane WSA approved by City Council Resolution #12-7964 on August 28, 2012, page 13.
[7] 3515 Monroe Street WSA approved by City Council Resolution #13-8090 on December 3, 2013, Appendix E.

The *Impacts and Mitigation Measures* section below includes a revised forecast of future water demand, including the Project and other anticipated development, that takes into account the lower actual water use compared to the 2010 UWMP conservative estimates.

Existing Water Demand on the Project Site. According to the WSA, the existing water demand on the Project site is 101,449,387 gallons per year, or 311.3 afy. Specifically, the City of Santa Clara Water and Sewer Utility estimates that the existing Santa Clara Golf & Tennis Club located on the Project site uses approximately 38,000 gallons per day (gpd) of potable water and 238,000 gpd of recycled water, for a total water usage of 276,000 gpd.[8] The majority of water is used for irrigation of the golf course. The Project site also includes the Bicycle-Motocross (BMX) track on Parcel 1 and surface parking lots on Parcel 5. These uses do not have landscaping or facilities that are connected to water sources. Therefore, the current water demand at Parcels 1 and 5 are negligible and not included in the Project site water use totals.

Water Supply

The water system in the City is operated and maintained by the City's Water and Sewer Utility. This system is supplied with potable water from three sources: SCVWD, which gets its water from the San Joaquin Delta, local surface water sources, and local groundwater; the San Francisco Public Utilities Commission (SFPUC), which gets its water from the Hetch Hetchy system; and 27 groundwater wells (discussed below) operated by the City's Water and Sewer Utility. The potable water supply is augmented with recycled water from South Bay Water Recycling. This recycled water is not permitted for potable use, but it can be used for irrigation, toilet flushing, and approved industrial uses.[9] Table 3.14-3 shows the total anticipated volume of water that will be used from each source to meet the expected demands projected in the 2010 UWMP. The sources of potable water supply as well as water storage, treatment, distribution, and demand are discussed below.

Table 3.14-3. Water Supply Projections by Water Source with SFPUC[a]

Source	2010	2015	2020	2025	2030	2035
Groundwater	13,980	23,048	23,048	23,048	23,048	23,048
SFPUC	2,454	5,040	5,040	5,040	5,040	5,040
SCVWD	4,372	4,570	5,236	5,236	5,236	5,236
Recycled Water	2,409	4,000	4,300	4,500	4,500	4,500
Conservation	0	694	795	874	930	930
Supply w/SFPUC (normal)	**23,215**	**37,352**	**38,419**	**38,698**	**38,754**	**38,754**
Supply w/SFPUC (single dry year)	*NA*	*34,313*	*34,714*	*34,993*	*34,135*	*34,135*
Supply w/SFPUC (multi-dry years, Y3)	*NA*	*37,352*	*37,753*	*38,032*	*35,088*	*35,088*
Supply w/out SFPUC >2018 (normal)	**23,215**	**37,352**	**33,379**	**33,658**	**33,714**	**33,714**
Supply w/out SFPUC >2018 (single dry year)	*NA*	*34,313*	*32,713*	*32,992*	*29,392*	*29,392*
Supply w/out SFPUC >2018 (multi-dry years, Y3)	*NA*	*37,352*	*32,713*	*32,992*	*33,048*	*33,048*

Source: City of Santa Clara Water and Sewer Utilities. 2015. *City Place Development Application: Water Supply Assessment for Compliance with California Water Code Section 10910*. June 10.
Note: [a] acre-feet per year.

[8] Langan Treadwell Rollo. 2015. Water Technical Memorandum for City Place Santa Clara Development. Prepared for Related Santa Clara, LLC. May 1.

[9] City of Santa Clara Water and Sewer Utilities. 2015. *City Place Development Application: Water Supply Assessment for Compliance with California Water Code Section 10910*. April 30.

The discussion that follows describes the four sources of water, treatment, storage, distribution system, existing potable water conveyance system to the Project site, existing recycled water conveyance system near the Project site, and existing water demand.

SCVWD Surface Deliveries. SCVWD manages water resources and wholesales treated water to 13 retailers in the County, including the City. Every five years SCVWD regularly evaluates and plans its wholesale water supplies by preparing and updating a UWMP addressing the County's comprehensive water needs. The most current SCVWD UWMP is from 2010. In addition to providing water directly through a surface treated water contract, SCVWD also indirectly supplies a portion of the City's groundwater by recharging the large Santa Clara Sub-basin (of which the City is one of multiple users) with imported Delta water.

SFPUC Surface Deliveries.[10] The City's current water supply contract with SFPUC is 4.5 million gallons per day (mgd) or roughly 5,040 afy. The SFPUC contract indicates that if certain conditions are met, the City may be required to reduce or eliminate its take from SFPUC. In a worst-case scenario, the City could lose its supply from SFPUC, reducing the total water supply projections by 5,040 afy from 2018 through 2035. If the City is required to eliminate the usage of water from SFPUC, the City would consider maintaining its existing 2010 UWMP total water supply projections by increasing groundwater utilization, increasing imported SCVWD surface water supply, or a combination of the two supplies.[11] Increased use of recycled water could also mitigate a portion of the loss of other supplies. Recycled water supplies are discussed in further detail below.

Groundwater.[12] The City is supplied by groundwater from the Santa Clara Valley Groundwater Basin, which extends from the Coyote Narrows at Metcalf Road in San José to Santa Clara County's northern boundary. The basin is bounded on the west and east by the Santa Cruz and Diablo Ranges, respectively. The mountain ranges converge at Coyote Narrows to form a sub-basin. The sub-basin is 22 miles long and 15 miles wide, at its widest point, and has a 225-mile surface area. The SCVWD estimates that the operational storage capacity of the sub-basin is approximately 350,000 acre feet, with an estimated maximum annual withdrawal of 200,000 acre feet.[13]

According to the WSA, the Santa Clara Valley Groundwater Basin is not adjudicated. The allowable withdrawal or safe yield of groundwater by the City is dependent on a number of factors, including: withdrawals by other water agencies, the quantity of water recharged to the basin, and the carryover storage (water available for use but not used in prior years) from each previous year. SCVWD estimates the amount of carryover storage in April of each year and reviews and modifies the basin's groundwater management strategy to avoid subsidence while allowing for groundwater use as needed to meet demand.[14] The most recent evaluation by DWR indicates that the Santa Clara Valley Groundwater Basin and the Santa Clara Sub-basin are not in overdraft.[15,16]

---

[10] City of Santa Clara Water and Sewer Utilities. 2015. *City Place Development Application: Water Supply Assessment for Compliance with California Water Code Section 10910*. April 30.

[11] City of Santa Clara 2002 Water Master Plan.

[12] City of Santa Clara Water and Sewer Utilities. 2015. *City Place Development Application: Water Supply Assessment for Compliance with California Water Code Section 10910*. April 30.

[13] City of Santa Clara 2010 Urban Water Management Plan, page 28.

[14] Santa Clara Valley Water District, 2010 Urban Water Management Plan.

[15] Department of Water Resource. 2003. *California's Groundwater Update 2003, DWR Bulletin 118*. Available: www.groundwater.water.ca.gov/bulletin118/update2003.

[16] 3515 Monroe Street WSA approved by City Council Resolution #13-8090 on December 3, 2013, Appendix E

The 2010 UWMP projects that the City's groundwater use will increase from approximately 13,980 afy in 2010 to 23,048 afy in 2015 and remain at that level in subsequent years. This conservative projection is unlikely to come to fruition as 2014 groundwater use totaled 14,096 acre-feet, 8,952 acre-feet below projected 2015 groundwater use. At the time that the 2010 UWMP was being prepared, groundwater use projections for the Santa Clara Valley Groundwater Basin had not been finalized for water planning purposes by other water providers in the region. This led the City to use each water provider's 2005 groundwater use projections. In 2005, agencies only projected groundwater use through 2030. At that point, in the absence of retailer projections for 2035, a rough projection was made using the average five-year incremental increase in cumulative groundwater demand. As a result, the 2010 UWMP cumulative groundwater demand for all groundwater producers in the basin, using conservative future extraction assumptions, indicates that by 2035, groundwater use could be approximately 166,000 afy compared with an estimated withdrawal capacity of approximately 200,000 afy.[17]

According to the WSA, the actual groundwater use projections are substantially lower than estimated for the water service providers considered in the 2010 UWMP. By 2035, the 2010 UWMP estimates indicate that Santa Clara Valley Groundwater Basin extractions, including the City's use of 23,048 afy, will be approximately 114,955 afy, or more than 50,000 afy lower than estimated in the 2010 UWMP and approximately 85,000 afy less than the safe yield for the aquifer. The projected cumulative 2035 demand level would also be substantially below the basin's estimated 200,000 afy safe yield. Although the current projected water supplies already cover the projected growth in the 2010 UWMP, the remaining available safe yield groundwater supplies coupled with the City's lower than projected current groundwater demands provide room for growth above and beyond 2035 projections.

Recycled Water Purchased from South Bay Water Recycling.[18] Wastewater designated for use as recycled water must undergo major treatment processes, and it is monitored as required by local, State, and federal agencies. Recycled water is conveyed and stored using a different set of infrastructure than potable water. The recycled water available in the City is provided by South Bay Water Recycling (SBWR) and meets current regulations of the State Water Board's Division of Drinking Water (DDW) for unrestricted use. This designation allows recycled water to be used for irrigation and industrial purposes within specific guidelines. As noted in the 2010 UWMP, there is ample capacity within the recycled water system. The San José/Santa Clara Regional Wastewater Treatment Facility (WWTF) currently produces in excess of 100 mgd of water that meets recycled water standards; however system-wide recycled water sales are approximately 14 mgd. The recycled water distribution system is shown in Figure 3.14-1.

The use of recycled water at any site is contingent upon the completion of the necessary arrangements, in accordance with SBWR, City, and DDW rules and regulations regarding the use of recycled water as well any physical extension of recycled water infrastructure. The necessary arrangements consist of approval of a site, based on the appropriate use and design standards, by both SBWR and DDW, as outlined in California Department of Public Health Regulations Related to Recycled Water (Title 22 of the California Code of Regulations).[19] In addition, payment must be made of applicable fees, rates, and charges. These fees, rates, and charges may include but are not limited to charges for major facilities and delivery charges for the recycled water used. The Project site already has access to recycled water distribution lines because the existing golf course uses recycled water for irrigation purposes.

---

[17] 2010 UWMP, page 54, Table 34.

[18] City of Santa Clara Water and Sewer Utilities. 2015. *City Place Development Application: Water Supply Assessment for Compliance with California Water Code Section 10910*. April 30.

[19] De Groot, Christopher. Director of Water and Sewer Utilities, City of Santa Clara. August 28, 2015—response to Debby Fernandez, City of Santa Clara.

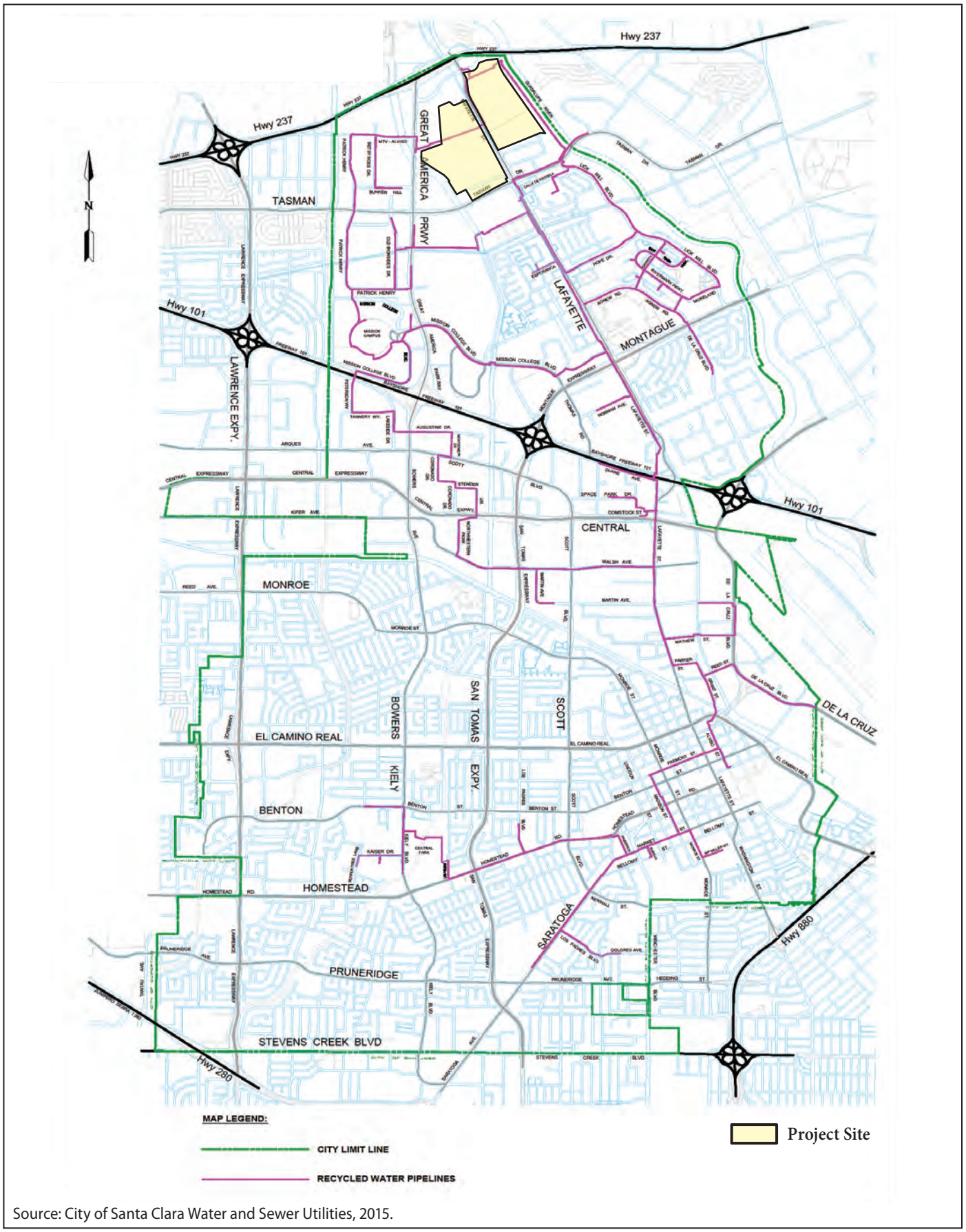

Source: City of Santa Clara Water and Sewer Utilities, 2015.

Graphics ... 00333.14 (05-27-2015) SS

Figure 3.14-1
Santa Clara Recycled Water System
City Place Santa Clara

Water Treatment

SCVWD owns and operates three water treatment plants: the Rinconada, Santa Teresa, and Penitencia Water Treatment Plants.[20] The Rinconada Water Treatment Plant (RWTP) produces potable water for areas within the west Santa Clara Valley, including the cities of Santa Clara, Los Gatos, Campbell, Sunnyvale, Cupertino, Mountain View, Los Altos, and Los Altos Hills. Treatment capacity at the RWTP is 80 mgd, and the average annual production between 2010 and 2014 was 48.7 mgd.[21]

The RWTP is in the process of implementing the Reliability Improvement Project. It is estimated that construction will begin in 2015 and end in 2019.[22] The Project would construct new clarification, filtration, and ozonation facilities.

Water Storage

Water purchased from SFPUC is used in conjunction with groundwater to supply water to the portion of the City north of US 101, which includes the Project site. SCVWD has infrastructure in place to supply water to the portion of the City north of US 101 should there be a temporary or permanent interruption in water supply from SFPUC.[23] As shown in Figure 3.14-2, treated surface water purchased from SCVWD is used in conjunction with groundwater to supply water to the southern portion of the City. Water purchased from the SFPUC is received and stored by the City at the North Side Water Storage Tanks located near San Tomas Aquino Creek south of Tasman Drive.

Water Distribution and Conveyance

City of Santa Clara Potable Water Distribution System.[24] The City's potable water system is separated into four interconnected zones in order to provide optimum pressures throughout the City. The four pressure zones and the location of the Project site, which is in Zone I, are shown in Figure 3.14-3.

Existing Potable Water Conveyance to the Project Site.[25] There is a network of water mains around Parcel 3 and Parcel 4 and along the west and south sides of Parcel 1 and Parcel 2. Domestic water is conveyed to the Project site along San Tomas Aquino Creek by a 16-inch ductile iron main. Water pressure is relevant to water distribution and conveyance because it can affect leakage and indicate whether assistance is needed to move water through the system (e.g., a regulator). The City recently reported a current pressure of 80 pounds per square inch (psi) in the public water mains around the Project site. This is on the higher end of the typical operating range (i.e., 40 to 100 psi for public water mains).[26,27]

---

[20] Santa Clara Valley Water District. n.d. *How We Clean Your Water*. Available: http://www.valleywater.org/Services/HowWeCleanYourWater.aspx. Accessed: May 28, 2015.

[21] Vandermarck, Monique. Operations Manager for Rinconada Water Treatment Plant. June 6, 2015—response to Christopher de Groot, City of Santa Clara.

[22] Santa Clara Valley Water District. n.d. *Reliability for Years to Come*. Available: http://rinconadareliabilityproject.com/about-reliability-improvement-project/. Accessed: May 28, 2015.

[23] De Groot, Christopher. Director of Water and Sewer Utilities, City of Santa Clara. August 28, 2015—response to Debby Fernandez, City of Santa Clara.

[24] City of Santa Clara Water and Sewer Utilities. 2015. *City Place Development Application: Water Supply Assessment for Compliance with California Water Code Section 10910*. April 30.

[25] Langan Treadwell Rollo. 2015. *Domestic Water Technical Memorandum for City Place Santa Clara Development*. Prepared for Related Santa Clara, LLC. May 1.

[26] Langan Treadwell Rollo. 2015. *Water Technical Memorandum for City Place Santa Clara Development*. Prepared for Related Santa Clara, LLC. May 1.

[27] De Groot, Christopher. Director of Water and Sewer Utilities, City of Santa Clara. August 28, 2015—response to Debby Fernandez, City of Santa Clara.

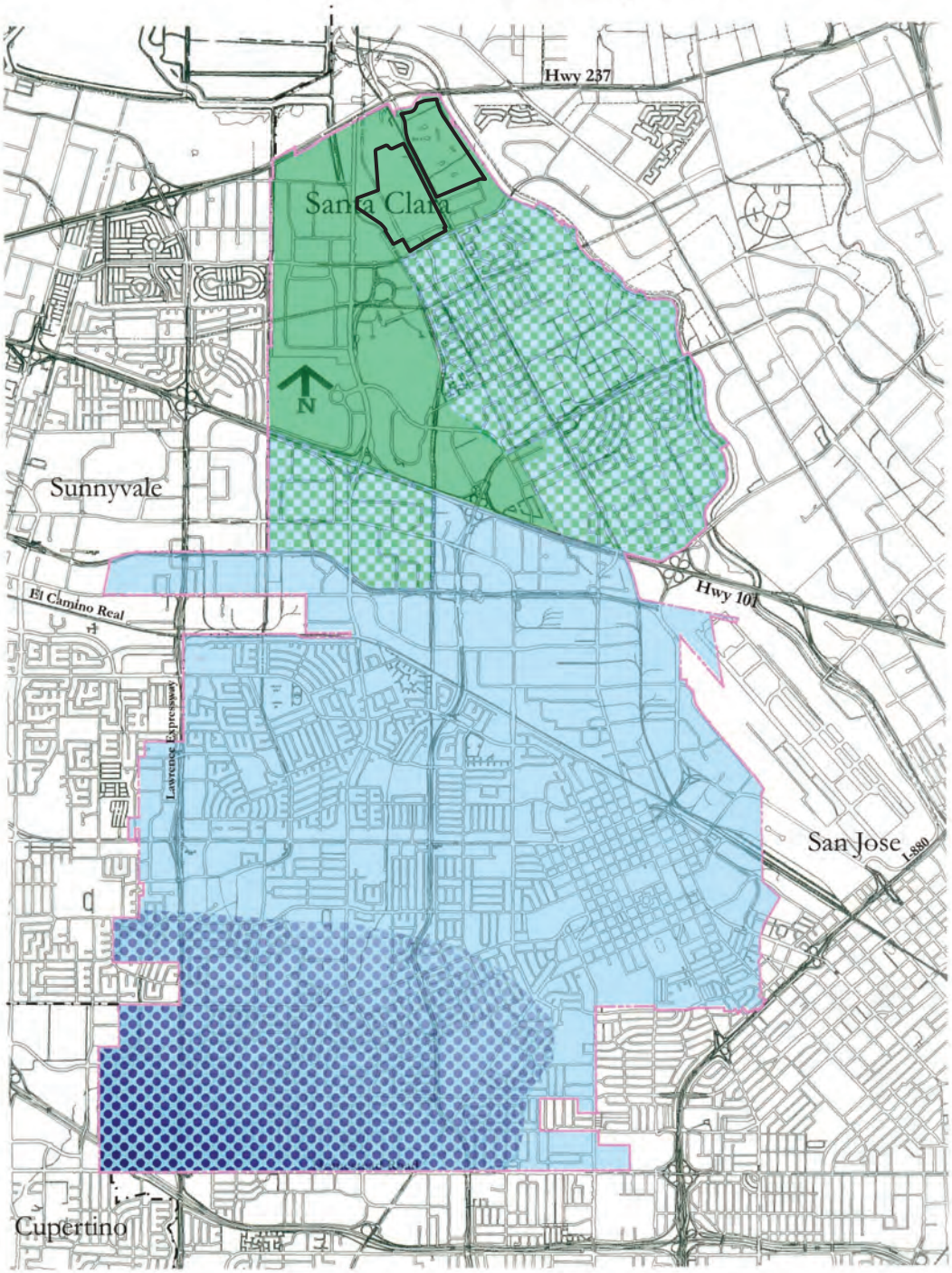

Legend

- SFPUC Hetch-Hetchy
- Blend of SFPUC Hetch Hetchy and Well Water
- City of Santa Clara Well Water
- A blend of Well Water and SCVWD treated surface water
- Project Site

Source: City of Santa Clara Water and Sewer Utilities, 2015.

Graphics ... 00333.14 (05-27-2015) SS

Figure 3.14-2
Santa Clara Water Supply Sources
City Place Santa Clara

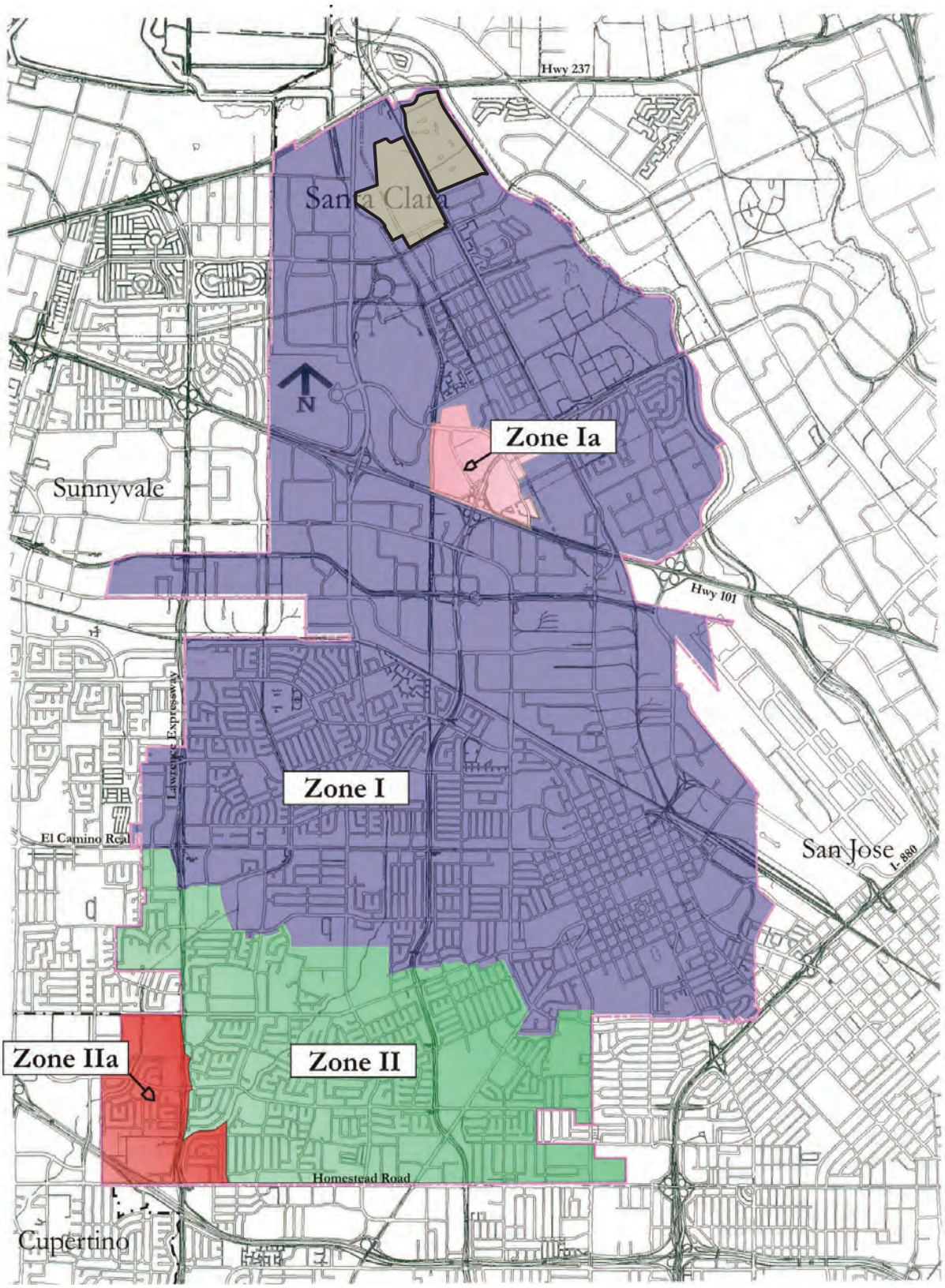

Project Site

Source: City of Santa Clara Water and Sewer Utilities, 2015.

Graphics ... 00333.14 (05-27-2015) SS

Figure 3.14-3
Santa Clara Potable Water Pressure Zones
City Place Santa Clara

Existing Recycled Water Conveyance near the Project Site.[28] There is a network of recycled water mains along the north, east, and west sides of Parcel 1, the east and south side of Parcel 2, and between Parcel 3 and Parcel 4. Recycled water is supplied to the Project site from the SBWR Program, which is conveyed from the plant to the northeast corner of Parcel 1 by a 16-inch plastic pipe.

The City of Santa Clara Water Utility estimates pressure in the recycled water system to be between 80 and 90 pounds per square inch (psi) in the vicinity of the Project site, which is on the higher end of the typical operating range (i.e., 60 to 120 psi for the recycled water system).[29]

Wastewater Treatment and Collection

The City's wastewater collection system includes approximately 270 miles of sewer pipelines, ranging from 4 to 48 inches in diameter, and six sewage pump stations.[30] The existing wastewater collection system for the City includes a series of gravity trunk sewers, pump stations, and sanitary force mains.[31]

The City's wastewater flows are conveyed to the WWTF, which was built in 1956 and is the largest advanced wastewater treatment facility in the western United States. The WWTF is a round-the-clock operation that cleans an average of 110 mgd of wastewater, and has the capacity to clean up to 167 mgd.[32] The City's current average dry weather flow (ADWF) is 12.8 mgd, based on 2009 data, while the City's allocation of treatment capacity is 23.103 mgd.[33]

Advanced (tertiary) level treatment is necessary to meet the region's strict State regulations for the shallow waters and sensitive ecosystem of the southern San Francisco Bay (Bay). The WWTF serves eight cities, including Santa Clara, with 1.4 million residents and a business sector with more than 17,000 main sewer connections.

The WWTF is currently operating under a 120 mgd dry weather effluent flow constraint.[34] This requirement is based upon State Water Board and Regional Water Quality Control Board (Regional Water Board) concerns over the effects of additional freshwater discharges from the WWTF on the saltwater marsh habitat, and pollutant loading to the Bay from the WWTF. Approximately 10 percent of the plant's effluent is recycled for nonpotable uses, and the remainder flows into the Bay.

For the baseline conditions for this analysis, wastewater generation at the Project site was estimated to be approximately 36,100 gpd.[35]

---

[28] Langan Treadwell Rollo. 2015. *Water Technical Memorandum for City Place Santa Clara Development*. Prepared for Related Santa Clara, LLC. May 1.

[29] De Groot, Christopher. Director of Water and Sewer Utilities, City of Santa Clara. August 28, 2015—response to Debby Fernandez, City of Santa Clara.

[30] City of Santa Clara. n.d. *Sewer Utility*. Available: http://santaclaraca.gov/index.aspx?page=1042. Accessed: February 10, 2015.

[31] Langan Treadwell Rollo. 2015. *Preliminary Infrastructure Master Plan for City Place Santa Clara*. Prepared for Related Santa Clara, LLC. June 30.

[32] Langan Treadwell Rollo. 2015. *Sanitary Sewer Technical Memorandum for City Place Santa Clara Development*. Prepared for Related Santa Clara, LLC. August 24.

[33] De Groot, Christopher. Director of Water and Sewer Utilities. June 5, 2015—response to Debby Fernandez, City of Santa Clara.

[34] City of San José, Office of the City Auditor. 2000. *Report to the City Council City of San José: An Audit of the San José-Santa Clara Water Pollution Control Plant's Progress Toward Meeting Effluent Limitations*. Available: http://www.sanjoseca.gov/documentcenter/view/5279. Accessed: February 10, 2015.

[35] This is based on assuming the existing potable water demand of 38,000 gpd is 5 percent higher than wastewater generation, which is a standard industry assumption.

Existing Wastewater System near the Project Site

The Project site is located at the downstream end of the City's piped collection system. From Great America Parkway on the west side of the Project site, two main sewers are located between Parcel 3 and Parcel 4. The northernmost gravity trunk sewer is a 33-inch reinforced concrete pipe (RCP), and the southernmost is a 42-inch RCP. Within Lafayette Street, there is a 36-inch gravity trunk sewer. These three sewers join in Lafayette Street into two 42-inch RCPs and continue north in Lafayette Street between Parcels 1 and 3. At the northern edge of Parcel 1, these sewers turn to the northeast, following the Parcel 1 boundary to the existing diversion structure, which diverts the flow to both the existing Rabello Pump Station and the Northside Pump Station. A 12-inch sewer in Stars and Stripes Drive connects to the 36-inch sewer in Lafayette Street.

The Rabello Pump Station works in parallel with the Northside Pump Station, located just northeast of State Route (SR) 237, to convey the sewage to the WWTF. The gravity sewer that bypasses the Rabello Pump Station continues beneath the Guadalupe River and SR 237, where it flows to the Northside Pump Station. From the Northside Pump Station, the wastewater is pumped and conveyed in a force main to the WWTF. The Rabello Pump Station pumps wastewater to the WWTF through a secondary force main, which follows the alignment of the Northside Pump Station gravity sewer and its force main once crossing beneath the Guadalupe River and SR 237.

The current pump station operation includes the Rabello and Northside Pump Stations working in parallel to pump the wastewater to the WWTF. The maximum capacity of this system, referred to as the Firm Capacity, is defined as the maximum capacity of the combined pump stations with the largest pump for each pump station out of commission. This builds some redundancy into the system, allowing it to function even if one of the pumps for each pump station is out of service. The Northside Pump Station has four pumps running in parallel to pump effluent, and the Rabello Pump Station has eight pumps running in parallel. Currently, the City estimates the Firm Capacity of these two stations to be 38.2 mgd.[36] The current flow to the Rabello and Northside Pump Station system is 37.2 mgd.[37]

Storm Drainage System

The City's storm drain system consists of curb inlets that collect and channel surface water, from rainfall and other sources, into a series of pipelines beneath City roadways. Stormwater is conveyed through these underground pipelines to the channelized creeks within the City, which then direct flow into the Bay. The existing City-owned and operated drainage system includes pump stations, retention basins, open drainage channels, and underground conveyance piping, and appurtenant drainage structures.[38] The on-site drainage system is made up of a corrugated poly-pipe network and inlet structures. The on-site system is described further in Section 3.10, *Hydrology and Water Quality*.

[36] Langan Treadwell Rollo. 2015. *Preliminary Infrastructure Master Plan for City Place Santa Clara*. Prepared for Related Santa Clara, LLC. June 30.

[37] Gomez, Gustavo. Principal engineer for the Department of Public Works, City of Santa Clara. August 27, 2015—response to Debby Fernandez, City of Santa Clara.

[38] Langan Treadwell Rollo. 2015. *Preliminary Infrastructure Master Plan for City Place Santa Clara*. Prepared for Related Santa Clara, LLC. June 30.

Solid Waste Collection and Disposal

Most of the Project site was a former landfill, which ceased accepting waste in 1993 and received final closure certification in September 1994. Currently, solid waste and recycling collection for businesses at commercial, which includes office uses, or institutional properties in the City is provided by Mission Trail Waste Systems through a contract with the City.[39] Solid waste collection for residential uses is also provided by Mission Trail Waste Systems; recycling collection for residential uses is provided by Recology South Bay.[40,41] Solid waste and recycling collection for business at industrial properties in the City is provided by non-exclusive franchise haulers.[42] Demolition materials from construction activities are processed at the Zanker Material Processing Facility and disposed of at the Newby Island Landfill, both located in San José.[43] The Zanker Material Processing Facility has a permit to accept 4,400 tons per day; it currently processes approximately 2,000 tons per day.[44,45]

Newby Island Landfill, located in San José, provides disposal capacity to nearby cities, including San José, Milpitas, Santa Clara, Cupertino, Los Altos, and Los Altos Hills.[46] The City has an arrangement with the owners of the Newby Island Landfill to provide disposal capacity for the City through 2024, as well as other landfills located outside of the County, according to the City's General Plan.[47,48] The Santa Clara County IWMP estimates there is adequate waste capacity through its planning horizon of 2024.[49] The Newby Island Landfill has a permit to accept a maximum of 3,260 tons of solid waste per day, it currently accepts an average of 2,400 tons per day, and it has a remaining disposal capacity of 21.2 million cubic yards (cy).[50,51] According to the City's General Plan EIR, a prerequisite for new residential development under Phase III (2025-2035) of the General Plan requires the City to identify adequate solid waste disposal sites after 2024, the end of the current contract between the City and Newby Island Landfill. The City owns property outside its jurisdictional boundaries that could potentially provide this service.

---

[39] City of Santa Clara. 2015. *Commercial Garbage & Recycling*. Available: http://santaclaraca.gov/index.aspx?page=2687. Accessed: May 21, 2015.

[40] City of Santa Clara. 2015. *Residential Garbage Disposal*. Available: http://santaclaraca.gov/index.aspx?page=2622. Accessed: July 6, 2015.

[41] City of Santa Clara. 2015. *Residential Recycling*. Available: http://santaclaraca.gov/index.aspx?page=3059. Accessed: July 6, 2015.

[42] City of Santa Clara. 2015. *Commercial Garbage & Recycling*. Available: http://santaclaraca.gov/index.aspx?page=2687. Accessed: September 23, 2015.

[43] Staub, Dave. Deputy director of the Department of Public Works, City of Santa Clara. August 28, 2015—response to Debby Fernandez, City of Santa Clara.

[44] Gross, Michael. Director of sustainability for Zanker Recycling. August 28, 2015—response to Debby Fernandez, City of Santa Clara.

[45] Zanker Recycling. n.d. *About Us*. Available: http://www.zankerrecycling.com/zanker-facilities/about-us/. Accessed: August 28, 2015.

[46] City of San José. 2014. *Planning Commission Staff Report: PD14-014*. Available: http://www.sanjoseca.gov/DocumentCenter/View/38008. December 10. Accessed: June 8, 2015.

[47] City of Santa Clara. 2010. *Resolution No. 10-7737*. Available: http://santaclaraca.gov/modules/showdocument.aspx?documentid=2744. Accessed: May 21, 2015.

[48] City of Santa Clara. 2010. *Santa Clara General Plan.* July 2010.

[49] City of Santa Clara. 2011. *City of Santa Clara Draft 2010–2035 General Plan: Integrated Final Environmental Impact Report*. January 2011.

[50] Cheso, Gil. Division Manager for Republic. June 8, 2015—response to Debby Fernandez, City of Santa Clara.

[51] CalRecycle. n.d. *Facility/Site Summary Details: Newby Island Sanitary Landfill (43-AN-0003)*. Available: http://www.calrecycle.ca.gov/SWFacilities/Directory/43-AN-0003/Detail/. Accessed: May 21, 2015.

The City of Santa Clara is working to meet a waste diversion goal of 50 percent. As of 2011 (the most recent year for which data approved by CalRecycle is available), the City is exceeding its diversion goal.[52] For the baseline conditions for this analysis, solid waste generation at the Project site is approximately 285 tons per year.[53]

Existing Energy Demand, Sources, and Distribution

Existing Energy Demand

For the baseline conditions for this analysis, electricity demand at the Project site was approximately 3 million kilowatt-hours (kWh) per year,[54] 5 million thousand British thermal units (kBTU) of natural gas per year,[55] and 32,900 BTU of transportation and other fuel per year.[56]

Electricity

Pacific Gas and Electric (PG&E) provides gas and electrical services to the vast majority of Northern California. However, some cities, like Santa Clara, have historically provided their own municipal electric company. The City of Santa Clara's municipal electric utility, SVP, provides electric utility power to all residences as well as commercial and industrial businesses in the City. In 2013, SVP's power mix was provided from natural gas (43.7 percent), renewable resources (24.2 percent), large hydroelectric (17.7 percent), coal (8.4 percent), and unspecified sources of power, meaning electricity from transactions that are not traceable to specific generation sources (6.0 percent).[57] SVP provides the option of covering up to 100 percent of electricity usage with renewable sources of power through the Santa Clara Green Power Program.[58]

Existing Electrical System near the Project Site[59]

The existing electric distribution system includes both overhead and underground facilities. SVP's electric distribution maps indicate that an existing 12-kilovolt (kV) underground distribution line provides service to existing commercial buildings along Stars and Stripes Drive. Additionally, there is an existing 12 kV overhead line running north–south under the PG&E transmission pole line on the east side of Lafayette Street. This pole line branches easterly to serve residential and commercial development southeast of the Project site. Lastly, SVP underground electric 12 kV feeder lines run along Great America Parkway, adjacent to Parcel 4, and along the Guadalupe River adjacent to Parcel 2.

---

[52] CalRecycle. n.d. *Jurisdiction Diversion/Disposal Rate Summary (2007 – Current)*. Available: http://www.calrecycle.ca.gov/LGCentral/reports/diversionprogram/JurisdictionDiversionPost2006.aspx. Accessed: May 21, 2015.

[53] Estimated using the CalEEMod default values. 2015.

[54] Electricity consumption based on data provided by the Project Developer.

[55] Natural gas consumption estimated using the CalEEMod default value. 2015.

[56] Fuel consumption based on vehicle miles traveled and data from Oak Ridge National Laboratory.

[57] Silicon Valley Power. 2013. *Power Content Label*. Available: http://siliconvalleypower.com/index.aspx?page=2022. Accessed: February 9, 2015.

[58] Silicon Valley Power. n.d. *Santa Clara Green Power FAQ*. Available: http://siliconvalleypower.com/index.aspx?page=2013#whatis. Accessed: February 9, 2015.

[59] Langan Treadwell Rollo. 2015. *Preliminary Infrastructure Master Plan for City Place Santa Clara*. Prepared for Related Santa Clara, LLC. June 30.

Because the City is surrounded by PG&E's electric service territory, PG&E-owned electric transmission lines traverse portions of Santa Clara. PG&E transmission lines traverse all five parcels at the Project site. PG&E maps indicate that two separate PG&E 115 kV overhead transmission pole lines run north–south along the west side of Lafayette Street. Additionally, a PG&E overhead transmission pole line runs north–south along the east side of Lafayette Street. These pole lines are in dedicated rights-of-way, which typically forbid structures of any kind.

Existing Natural Gas System near the Project Site

PG&E's maps indicate that an existing 24-inch, high-pressure gas transmission main is located north–south along Lafayette Street.[60] Specifically, the gas main runs along the west side of Lafayette Street from the south, northward, until it reaches the midpoint of Parcel 4, then crosses and traverses northward up the east side of Lafayette Street along the entire frontage of Parcels 1 and 2. In addition, 2- and 1.25-inch diameter distribution gas mains are located along Stars and Stripes Drive. Also, a 4-inch gas main is located north–south along the east side of Lafayette Street, and a second 4-inch main is located along the east side of Great America Parkway adjacent to Parcel 4.

Ameresco Methane Plant

A methane power plant, which was commissioned in 2009 and is currently owned and operated by Ameresco, is adjacent to the BMX track on Lafayette Street. The current landfill gas collection system throughout most of the Project site includes a series of vertical wells, horizontal conveyance piping, and manifolds that connect to processing or generation equipment at the Ameresco facility. This landfill gas-to-energy (LGTE) plant consists of three FlexEnergy micro-turbines that combust the methane gas and other trace contaminants in the landfill gas to generate up to 750 kW of electricity per hour. As methane concentrations and landfill gas flows decline over time, the modular turbines will be removed one by one to match landfill gas production until the plant is no longer economical to operate. At some point in time, the landfill gas quantity and concentrations of methane will not be sufficient for the LGTE plant to operate. However, landfill gas emissions from the collection system will still be permitted by the BAAQMD and will likely require emissions control to meet applicable air discharge requirements. The turbines are capable of operating on landfill gas with as little as 30 percent methane.[61] SVP purchases the renewable energy resource from Ameresco for its customers.[62] The Ameresco Methane Plant is located on Parcel 1.

---

[60] Langan Treadwell Rollo. 2015. *Preliminary Infrastructure Master Plan for City Place Santa Clara*. Prepared for Related Santa Clara, LLC. June 30.

[61] Ameresco, Inc. 2012. *Nomination Packet for 2012 Landfill Gas Utilization Excellence Award, City of Santa Clara All-Purpose Landfill Gas to Energy Plant*. Prepared for Solid Waste Association of North America.

[62] Staub, David and Michael T. Bakas. *Waste Advantage Magazine.* Landfill Gas Management Case Study. Santa Clara Converts Low Concentration Landfill Gas to Clean Energy. September 2011. Available: http://www.ameresco.com/sites/default/files/lfg_management_case_study.pdf. Accessed: September 8, 2014.

Environmental Impacts

This section describes the impact analysis relating to utilities and service systems for the Project. It describes the methods used to determine the impacts of the Project and lists the thresholds used to conclude whether an impact would be significant. Measures to mitigate (i.e., avoid, minimize, rectify, reduce, eliminate, or compensate for) significant impacts accompany each impact discussion.

Thresholds of Significance

In accordance with Appendix G of the State CEQA Guidelines, the Project would be considered to have a significant effect if it would result in any of the conditions listed below.

- Exceed wastewater treatment requirements of the applicable Regional Water Quality Control Board.
- Require or result in the construction of new water or wastewater treatment facilities or expansion of existing facilities, the construction of which could cause significant environmental effects.
- Require or result in the construction of new stormwater drainage facilities or expansion of existing facilities, the construction of which could cause significant environmental effects.
- Have insufficient water supplies available to serve the project from existing entitlements and resources, or would new or expanded entitlements be needed.
- Result in a determination by the wastewater treatment provider that serves or may serve the project that it does not have adequate capacity to serve the project's projected demand in addition to the provider's existing commitments.
- Be served by a landfill with insufficient permitted capacity to accommodate the project's solid waste disposal needs.
- Violate federal, State, and local statutes and regulations related to solid waste.

By way of background, Appendix F of the State CEQA Guidelines and Public Resources Code Section 21100(b)(3) provide that a project would be considered to have a significant effect if it would result in wasteful, inefficient, or unnecessary energy use. Neither of those provisions offers a precise threshold of significance for determining whether a project would result in "wasteful, inefficient, or unnecessary energy use." This lack of a threshold of significance has made it difficult for lead agencies to conduct the analysis contemplated in Appendix F and Section 21100(b)(3). A recent court decision, *CCEC v. City of Woodland* (2014), 225 Cal. App. 4th 173, held that an EIR had not discussed energy use in sufficient detail. However, that case also did not establish a threshold for determining what constitutes "a wasteful, inefficient or unnecessary energy." Considering the implications of the *City of Woodland* decision, this EIR applies a "common sense" threshold, whereby a project's energy usage would be considered "wasteful, inefficient, and unnecessary" if the project were to violate Title 24 of the California Code of Regulations,[63] would be inconsistent with the energy-related measures in the City of Santa Clara's Climate Action Plan, or would otherwise consume a substantially greater amount of energy, in either the construction or operational phase, than similar projects of a similar size that did not incorporate the Project's design features and mitigation. This analysis will employ such metrics to judge significance.

[63] No other federal or state regulatory energy efficiency standards apply to the Project.

Methods for Analysis

Project impacts are evaluated according to the above standards of significance by utilizing information on existing utility and service systems infrastructure provided by the City, SCVWD, the WWTF, and the Newby Island Landfill, and adding Project demands. Baseline conditions considered in the following analyses differ based on the environmental topic. For water supply, the Project's water demand accounted for the existing on-site water demand at the Project site, as described in *Environmental Setting*, above.

Water. Potential impacts on water supply were evaluated based on the WSA prepared for the Project, which considers the City's 2010 UWMP. Potential impacts on the water conveyance system were evaluated using the information in the *Water Technical Memorandum for City Place Santa Clara Development*, which documents the existing domestic and recycled water systems, water design criteria, and proposed water infrastructure.

Wastewater. Potential impacts on the wastewater conveyance and wastewater treatment plant were evaluated using the information in the *Sanitary Sewer Technical Memorandum for City Place Santa Clara Development*, which evaluated the existing and future capacity of the wastewater conveyance system within the City using a hydraulic model. The pumping capacity of both the Rabello and Northside Sanitary Sewer Pump Stations is not included in the model at this time.

Storm Drain. Potential impacts on the storm drain system were evaluated using the information in the *Stormwater Technical Memorandum for City Place Santa Clara Development*, which documents the existing storm drainage system, stormwater design criteria, and storm drain infrastructure. The need for storm drain infrastructure is presented in Section 3.10, *Hydrology and Water Quality*. This section's analysis is limited to the secondary environmental impacts associated with storm drain infrastructure.

Solid Waste. Potential impacts on the Newby Island Landfill were evaluated by calculating the amount of solid waste that would be generated by the Project, comparing the volumes to the existing remaining capacity of the landfill, and determining whether there would be enough capacity to serve the Project.

Energy. Electricity and natural gas impact analyses were based on the demand for these resources and services associated with the Project to determine whether sufficient capacity exists to meet that demand. Energy demand analyses were also based, in part, on calculations that were used to conduct the air quality and GHG emissions analyses. Energy efficiency analyses were based on elements of Chapter 2, *Project Description*, and the mitigation measures related to reducing emissions and energy demand set forth in other sections of this EIR.

Scheme Analysis

Due to the different development schemes and intensities, the two proposed schemes (Scheme A and Scheme B) would result in different amounts of on-site employees and daytime versus nighttime population activity, as described in Section 3.12, *Population and Housing*. In terms of employment growth at the Project site, office uses would generate the need for the most employees compared to retail, hotel, and residential uses. Scheme A would include more on-site housing and, therefore, more City residents. Scheme B is used as the basis for evaluation of water supply impacts because it would result in a greater overall demand for water. Scheme A is used as the basis for evaluation of impacts related to wastewater because it would generate the greatest impacts for that topic; whereas Scheme B is used as the basis for evaluation for solid waste, natural gas, and fuel because it would generate the

greatest impacts for those topics. Scheme A and Scheme B would result in a similar demand for electricity and similar stormwater system impacts.[64]

Impacts Not Evaluated in Detail

Solid Waste Regulations. The Project involves operation and maintenance of residential, commercial, office, hotel, and entertainment uses, which would not result in the generation of unique types of solid waste that would conflict with existing regulations applicable to solid waste disposal. The Project would be required to comply with City solid waste disposal requirements, including recycling or special materials disposal programs to comply with the provisions of AB 939. Therefore, the Project would comply with applicable federal, State, and local statutes and regulations related to solid waste, resulting in ***no impact***. This impact is not evaluated further.

Impacts and Mitigation Measures

Impact UT-1: Water Demand. The Project would have sufficient water supplies available to serve the Project from existing entitlements and resources, and no new or expanded entitlements would be needed. In addition, the Project's contribution to cumulative impacts is less than considerable. (LTS)

Scheme A would result in a total water demand of 1,911 afy, which represents an increase of 1,592 afy compared to the existing water demand on the Project site of 319 afy. Scheme B would result in a total water demand of 1,921 afy, which represents an increase of 1,602 afy compared to the existing water demand on the Project site of 319 afy. Table 3.14-4 shows the estimated water demand by land use for Scheme A and Scheme B, and Table 3.14-5 shows the estimated water demand by parcel for Scheme A and Scheme B. As shown in Table 3.14-5, Scheme B would result in an overall greater water demand. The Project could retain existing Santa Clara Fire Station 10 (Fire Station 10) at its current location or require relocation on- or off-site. If reconstructed, the facility would be the same size as the existing facility (approximately 7,364 gross square feet [gsf]) and employ the same number of firefighters (three), which would result in water demand that would be similar to existing conditions.

[64] Electricity demand under Scheme A and Scheme B would be similar, based on estimates that use the CalEEMod default values. The stormwater system impacts would be similar because Scheme A and Scheme B would result in approximately the same amount of impervious surfaces.

Table 3.14-4. Water Demand of the Project by Land Use[a]

Land Use	Scheme A Water Demand	Scheme B Water Demand
Office	897.7	1,048.2
Retail	127.9	144.9
Hotel	310.8	310.8
Residential	184.3	27.1
Landscape Irrigation	390.0	390.0
Subtotal	*1,910.6*	*1,921.0*
Existing City Place Site Usage	311.3	311.3
Subtotal	*1,599.3*	*1,609.7*
Existing Tasman East Buildings	7.3	7.3
Total	**1,592.0**	**1,602.4**

Source: City of Santa Clara Water and Sewer Utilities. 2015. *City Place Development Application: Water Supply Assessment for Compliance with California Water Code Section 10910*. June 10. For existing Tasman East buildings, Vasquez pers. comm.
Note:
[a] acre-feet per year

Table 3.14-5. Water Demand of the Project by Parcel[a]

Parcel	Scheme A Water Demand	Scheme B Water Demand
Parcel 5 (Phase 1)	233.0	233.0
Parcel 4 (Phases 2, 3, 4)	775.6	800.2
Parcel 3 (Phase 5)	192.9	192.9
Parcel 1 (Phase 6)	259.9	259.9
Parcel 2 (Phase 7)	224.6	217.4
Parcel 2 (Phase 8)	224.6	217.4
Subtotal	*1,910.6*	*1,921.0*
Existing City Place Site Usage	311.3	311.3
Subtotal	*1,599.3*	*1,609.7*
Existing Tasman East Buildings	7.3	7.3
Total	**1,592.0**	**1,602.4**

Source: City of Santa Clara Water and Sewer Utilities. 2015. *City Place Development Application: Water Supply Assessment for Compliance with California Water Code Section 10910*. June 10. For existing Tasman East buildings, Vasquez pers. comm.
Note:
[a] acre-feet per year

Table 3.14-6 shows the adjusted water demand, including the Project and other approved development in the City.

Table 3.14-6. Water Demand, 2015–2035, Including Project and Other Approved Projects (afy)

	2010	2015	2020	2025	2030	2035	Source
Existing Water Demand	20,806	20,790					WSA Table 4 for 2010; 105 percent of 2014 for 2015
Other Additional Approved Demand		753	706				WSA Table 7
City Place Site Existing Demand			-311		-7		Existing Water Demand (primarily golf course) eliminated by Project, including the three existing buildings in Tasman East
Additional Scheme B Demand			233	776	678	225	Project demand derived by subtracting WSA Table 7 from WSA Table 8 and accounting for reduction in existing water demand
Potable Water Demand with Project	*20,806*	*21,543*	*22,170*	*22,946*	*23,616*	*23,841*	*Added existing, other approved, and Project demand*
Recycled	2,409	4,000	4,300	4,500	4,500	4,500	WSA Table 1b
Additional Water Use and Losses with Project		894	912	938	957	963	Losses are included in actual use for 2010. For with-Project demand, used UWMP percentage (~4 percent) for additional water use and system losses and applied to the potable demand with Project
Adjusted Demand – Normal Year	*23,215*	*26,436*	*27,382*	*28,383*	*29,073*	*29,303*	*Added potable water demand, recycled, and water use and losses*
Adjusted Demand – Single Dry	NA	26,436	27,382	28,383	29,073	29,303	Assumed same as normal year, per UWMP
Adjusted Demand – Multiple Dry Year/Y3	NA	28,047	29,048	30,080	30,797	31,041	UWMP-estimated increase (~6 percent) in water demand for multiple dry year over normal year for 2015–2030 was applied to the adjusted normal year

Table 3.14-7 compares supply and total demand, including the demand from the Project and other approved development in the City.

Table 3.14-7. Santa Clara Water Supply and Demand, 2015–2035, Including Project and Other Approved Projects (afy)

	2010	2015	2020	2025	2030	2035	Source
Normal Year, w/SFPUC							
Supply	23,215	37,352	38,419	38,698	38,754	38,754	WSA
Demand	23,213	26,436	27,382	28,383	29,073	29,303	Adjusted Demand with Project
Balance	*2*	*10,916*	*11,037*	*10,315*	*9,681*	*9,451*	
Normal Year, w/o SFPUC > 2018							
Supply	NA	37,352	33,379	33,658	33,714	33,714	WSA
Demand	NA	26,436	27,382	28,383	29,073	29,303	Adjusted Demand with Project
Balance	NA	*10,916*	*5,997*	*5,275*	*4,641*	*4,411*	
Single Dry Year, w/ SFPUC							
Supply	NA	34,313	34,714	34,993	34,135	34,135	WSA
Demand	NA	26,436	27,382	28,383	29,073	29,303	Adjusted Demand with Project
Balance	NA	*7,877*	*7,332*	*6,610*	*5,062*	*4,832*	
Single Dry Year, w/o SFPUC > 2018							
Supply	NA	34,313	32,713	32,992	29,392	29,392	WSA
Demand	NA	26,436	27,382	28,383	29,073	29,303	Adjusted Demand with Project
Balance	NA	*7,877*	*5,331*	*4,609*	*319*	*89*	
Multiple Dry Years, Year 3, w/SFPUC							
Supply	NA	37,352	37,753	38,032	35,088	35,088	WSA
Demand	NA	28,047	29,048	30,080	30,797	31,041	Adjusted Demand with Project
Balance	NA	*9,305*	*8,705*	*7,952*	*4,291*	*4,047*	
Multiple Dry Years, Year 3, w/o SFPUC > 2018							
Supply	NA	37,352	32,713	32,992	33,048	33,048	WSA
Demand	NA	28,047	29,048	30,080	30,797	31,041	Adjusted Demand with Project
Balance	NA	*9,305*	*3,665*	*2,912*	*2,251*	*2,007*	

Table 3.14-8 shows the adjusted water demand, including the Project and cumulative development in the City.

Table 3.14-8. Santa Clara Water Demand, 2015–2035, Including Project and Cumulative Development (afy)

	2010	2015	2020	2025	2030	2035	Source
Existing Water Demand	20,806	20,790					WSA Table 4 for 2010; 105 percent of 2014 for 2015
Other Additional Approved Demand		753	706				WSA Table 7
City Place Site Existing Demand			-311		-7		Existing water demand (primarily golf course) eliminated by Project, including the existing Tasman East buildings
Additional Project Demand			233	776	678	225	Project demand derived by subtracting WSA Table 7 from WSA Table 8 and accounting for reduction of existing water demand
UWMP Projected Demand			1,444	1,307	1,417	1,314	UWMP 5-year incremental increases in other demand
Potable Water Demand with Project	*20,806*	*21,543*	*23,614*	*25,697*	*27,784*	*29,323*	*Added all of the above*
Recycled	2,409	4,000	4,300	4,500	4,500	4,500	WSA Table 1b
Additional Water Use and Losses		894	971	1,049	1,126	1,184	Losses are included in actual use for 2010. For 2015–20235, used UWMP percentage (~4 percent) for additional water use and system losses and applied to the potable demand total
Adjusted Demand – Normal Year	*23,215*	*26,437*	*28,885*	*31,246*	*33,410*	*35,006*	*Added potable water demand, recycled, and water use and losses*
Adjusted Demand – Single Dry	NA	26,436	28,885	31,246	33,410	35,006	Assumed same as normal year, per UWMP
Adjusted Demand – Multiple Dry Year/Year 3	NA	28,047	30,643	33,114	35,392	37,082	UWMP-estimated increase (~6 percent) in water demand for multiple dry year over normal year for 2015–2030 was applied to the adjusted normal year

Table 3.14-9 compares supply and demand, including the demand from the Project and cumulative development in the City.

Table 3.14-9. Santa Clara Water Supply and Demand, 2015 – 2035, Including City Place and Cumulative Development (afy)

	2010	2015	2020	2025	2030	2035	Source
Normal year, w/SFPUC							
Supply	23,215	37,352	38,419	38,698	38,754	38,754	WSA
Demand	23,215	26,436	28,885	31,246	33,410	35,006	Adjusted Demand with Project
Balance	*0*	*10,916*	*9,534*	*7,452*	*5,344*	*3,748*	
Normal year, w/o SFPUC > 2018							
Supply	NA	37,352	33,379	33,658	33,714	33,714	WSA
Demand	NA	26,436	28,885	31,246	33,410	35,006	Adjusted Demand with Project
Balance	*NA*	*10,916*	*4,494*	*2,412*	*304*	*-1,292*	
Single Dry Year, w/SFPUC							
Supply	NA	34,313	34,714	34,993	34,135	34,135	WSA
Demand	NA	26,436	28,885	31,246	33,410	35,006	Adjusted Demand with Project
Balance	*NA*	*7,877*	*5,829*	*3,747*	*717*	*-871*	
Single Dry Year, w/o SFPUC > 2018							
Supply	NA	34,313	32,713	32,992	29,392	29,392	WSA
Demand	NA	26,436	28,885	31,246	33,410	35,006	Adjusted Demand with Project
Balance	*NA*	*7,877*	*3,828*	*1,746*	*-4,026*	*-5,614*	
Multiple Dry Years, Year 3, w/SFPUC > 2018							
Supply	NA	37,352	37,753	38,032	35,088	35,088	WSA
Demand	NA	28,047	30,643	33,114	35,392	37,082	Adjusted Demand with Project
Balance	*NA*	*9,305*	*7,110*	*4,918*	*-304*	*-1,994*	
Multiple Dry Years, Year 3, w/o SFPUC > 2018							
Supply	NA	37,352	32,713	32,992	33,048	33,048	WSA
Demand	NA	28,047	30,643	33,114	35,392	37,082	Adjusted Demand with Project
Balance	*NA*	*9,305*	*2,070*	*-122*	*-2,344*	*-4,034*	

As shown in Table 3.14-7, when taking into account other approved development and Project water demand along with existing demand, there is adequate projected water supply to provide water out to 2035 under normal year, single dry year, and multiple dry year scenarios. The Project demand estimates do not take into account the expected on-site water reduction strategies.[65] As a result, the Project demand estimates overstate the likely demand and the amount of remaining supply should be higher than shown in Table 3.14-7. Because the evidence shows that there is sufficient supply for existing, previously approved projects, and Project water demands out to 2035 under multiple water year types, implementation of the Project would have a ***less-than-significant*** impact on water supplies in SCVWD's service area, and expansion of existing entitlement would not be necessary to accommodate the Project.

When including potential cumulative demand from the City's 2010 UWMP for the 2015 to 2035 period, along with the existing demand, other approved demand, and the Project demand (as shown in Table 3.14-8), there would be certain supply demand deficits (as shown in Table 3.14-9) when using highly conservative water demand estimates for the Project and cumulative demand. However, as discussed below, there are available water supplies to meet cumulative demand when taking into account supply conditions as well as existing practices during drought years.

- **Normal Year**: Sufficient water supplies exist to meet the projected City 2015 to 2035 cumulative water demand in normal years if SFPUC Hetch Hetchy supplies are provided to the City. If the City does not receive SFPUC Hetch Hetchy water, after contract negotiations with SFPUC in 2018, there would be sufficient water supply through 2030; however, there would be an estimated water supply shortfall of approximately 1,300 afy in 2035. As discussed above, the Project demand is conservatively estimated because it does not include the proposed reductions in indoor and outdoor water use, the reduction from the elimination of three commercial buildings for the Lick Mill Boulevard extension (Tasman East), and the presumption that landscape water demands would be met by recycled water instead of potable water. As described in the WSA, there is ample opportunity to expand recycled water service both at the Project site and in other areas in Santa Clara through existing infrastructure. In addition, as described in the WSA, there is approximately 85,000 afy of unutilized groundwater supply in the groundwater basin below the basin's safe yield, taking into account cumulative demands of Santa Clara and other nearby cities that utilize the same groundwater basin. As a result, the calculated 1,300 afy shortfall shown in Table 3.14-9 would not likely occur given a smaller actual Project demand, the expanded use of recycled water (both on-site as proposed and off-site), and/or the minor expansion of use of available groundwater by the City.
- **Single Dry Year**: Sufficient water supplies exist to meet the projected City 2015 to 2030 cumulative water demand if SFPUC Hetch Hetchy supplies are provided to the City; however, there would be a projected water supply shortfall of approximately 900 afy in 2035. If the City does not receive SFPUC Hetch Hetchy water, after contract negotiations with SFPUC in 2018, there would a projected water supply shortfall of approximately 4,000 afy starting in 2030,

[65] As discussed in Chapter 2, *Project Description*, water reduction strategies that would be implemented as part of the Project include the use of low-flow faucets, water closets, and urinals. In addition, the landscaping on the Project site would be irrigated with recycled water, and the plants would be drought-tolerant. Recycled water could also be considered for use in water features, mechanical cooling systems, and toilet flushing. The combined implementation of water conversation strategies could reduce indoor water demand by 10 percent and outdoor water demand by 20 percent. These reductions were not taken into account in the WSA or in the analysis above (Table 3.14-6), indicating that the Project demand estimates presented above are conservative. These reduction assumptions would lower Scheme B demand by approximately 231 af (10 percent x indoor use of 1,531 + 20 percent of irrigation of 390 af = 231 af).

rising to 5,600 afy in 2035. As stated in the WSA, the 2010 UWMP identifies specific mandatory water use prohibitions and enforcement mechanisms that the City will implement to reduce water demand as necessary and address water supply limitations in the future if shortfalls were to actually be realized (e.g., prohibit cleaning sidewalks, hard surfaces, etc., with water during all drought stages; prohibit water waste due to defective plumbing/valve leaks during all drought stages; and not restricting irrigation of golf courses, except greens and tees, during the advisory and voluntary drought stage and then restricting irrigation of golf courses, except greens and tees, during mandatory and emergency-curtailment drought stages). These reduction measures can readily reduce temporary water demand by at least 20 percent overall through water use management plans 1 and 2. These measures would reduce overall City demand in the without-SFPUC scenario sufficiently in a single dry year such that there would be adequate supply for cumulative demand.[66]

- **Multiple Dry Years (Year 3)**: Sufficient water supplies exist to meet the UWMP projected City 2015 to 2025 water demand if SFPUC Hetch Hetchy supplies are provided to the City; however, there would be a projected water supply shortfall of approximately 300 afy starting in 2030, rising to 2,000 afy in 2035. If the City does not receive SFPUC Hetch Hetchy water, after contract negotiations with SFPUC in 2018, there would be a projected water supply shortfall of approximately 120 afy starting in 2025, rising to 4,000 afy in 2035. As stated in the WSA, the 2010 UWMP identifies specific, mandatory water use prohibitions and enforcement mechanisms that the City will implement to reduce water demand as necessary to address water supply limitations in the future if shortfalls were to actually be realized. These reduction measures can readily reduce temporary water demand by at least 20 percent overall through water use management plans 1 and 2. This would reduce overall City demand in the without-SFPUC afy in multiple dry years scenario sufficiently such that there would be adequate supply for cumulative demand.[67]

As shown above, under reasonably foreseeable conditions, cumulative water demands, including the Project, would not exceed available water supplies, and thus no significant cumulative effect on water supply is identified and the Project's contribution would be less than considerable and, thus, cumulative impacts are also ***less than significant***.

Impact UT-2: Water Delivery System. The Project would require the expansion of existing facilities, the construction of which could cause significant environmental effects. (LTS/M)

Water.[68] Each development parcel would include a combined domestic and fire water system looped network with multiple points of connection to the existing system. Connections to the public system, provided by the City of Santa Clara Water Utility, would be at existing lines along Great America Parkway, Stars and Stripes Drive, Tasman Drive, and Lafayette Street. Each connection to the existing public water system would require a master meter and backflow preventer to keep water from flowing from the Project back into the public system.

---

[66] In the without-SFPUC cumulative scenario for a single dry year, a 20 percent reduction would result in an adjusted cumulative demand of 26,700 afy in 2030 and 28,000 afy in 2035 compared with a supply of 29,400 afy in 2030 and 2035.

[67] In the without-SFPUC scenario for the third year of a multiple dry year condition, a 20 percent reduction would result in an adjusted cumulative demand of 26,500 afy in 2025, 28,300 afy in 2030, and 29,700 afy in 2035 compared with a supply of approximately 33,000 afy in 2025, 2030, and 2035.

[68] Langan Treadwell Rollo. 2015. *Preliminary Infrastructure Master Plan for City Place Santa Clara*. Prepared for Related Santa Clara, LLC. June 30.

Current State Water Board DDW regulations restrict the construction of public water mains over landfills, unless the board grants the City a waiver. Specific water utility materials, methods of construction, locations of appurtenances (such as valves), meters, and backflow devices must be approved by DDW and then the City.

Implementation of the water system as currently designed would likely require some off-site improvements to the existing utility systems.[69] The connection point to the northeast of Parcel 3 is a stubbed asbestos cement water main that was installed in 1970 and later abandoned. It may not be in an acceptable condition to serve the Project. Also, a considerable amount of fill may need to be added to Stars and Stripes Drive, which would require the existing utilities in Stars and Stripes Drive to be raised. The City also noted approximately 2,000 feet of domestic water mains that may need to be upsized, including the 8-inch asbestos cement main in Great America Parkway, the 8-inch asbestos cement main in Lafayette Street, and parts of the loop in Calle De Luna and Calle Del Mundo. An extension of the existing water main in Tasman Drive may also be necessary. Additional study would be required to determine if these sections or others would need to be upsized to meet the water demand of the Project and the extent of improvements.

For this EIR, it is assumed that, in addition to the on-site water infrastructure improvements, there would also be upgrades to the water lines northeast of Parcel 3 and in Stars and Stripes Drive, Great America Parkway, Lafayette Street, Calle De Luna, Calle Del Mundo, and Tasman Drive. This EIR describes the different construction impacts associated with Project and infrastructure development in other sections, including, but not limited to, erosion/sedimentation, air quality, geology and soils, cultural resources, biological resources, and traffic. Of note, given that most of these off-site water lines are located within streets, there would be periodic traffic disruption due to water line upgrades.

Recycled Water.[70,71] Recycled water would continue to be supplied to the Project site from the SBWR Program, which is an off-site facility. The proposed recycled water distribution for the Project site would be designed for each parcel to have its own internal system. The recycled water system for each parcel would have two points of connection to maintain recycled water service. For both Parcel 1 and Parcel 2, the recycled water distribution would include one point of connection to the existing recycled water main in Lafayette Street and one point of connection to the recycled water main along the eastern edge of Parcel 1 and Parcel 2. For Parcel 3 and Parcel 4, the recycled water distribution would include two points of connection to the existing recycled water main located in the easement between Parcel 3 and Parcel 4. Parcel 5 would connect to the new infrastructure in Parcel 4. Recycled water may be considered for use in irrigation, water features, mechanical cooling systems, and toilet flushing. Each connection for each use would require a separate meter as well as City and State approval via an independent recycled water permitting process.

Based on the analysis above, implementation of the Project would require the expansion of the City's water delivery system, including both on-site and some off-site locations, but would not require expansion of the recycled water system off-site. Construction impacts of the Project (including the water delivery system) are discussed throughout this EIR and would, in some circumstances, result in significant impacts prior to mitigation. All relevant mitigation measures included for construction in other EIR sections would apply to water line and recycled water line construction on- and off-site. As such, implementation of the Project would result in impacts on the City's water and recycled water delivery system that would be ***less than significant with mitigation***.

---

[69] Langan Treadwell Rollo. 2015. *Preliminary Infrastructure Master Plan for City Place Santa Clara*. Prepared for Related Santa Clara, LLC. June 30.

[70] Langan Treadwell Rollo. 2015. *Preliminary Infrastructure Master Plan for City Place Santa Clara*. Prepared for Related Santa Clara, LLC. June 30.

[71] Langan Treadwell Rollo. 2015. *Water Technical Memorandum for City Place Santa Clara Development*. May 1.

Impact UT-3: Wastewater Generation. The Project would not exceed wastewater treatment requirements of the applicable Regional Water Quality Control Board, require or result in the construction of new wastewater treatment facilities or the expansion of existing treatment facilities, or result in a determination by the WWTF that it has inadequate capacity to serve the Project's expected demand and existing entitlements. However, the existing sanitary sewer system serving the Project site would not have sufficient pumping capacity to accommodate the Project. (NI [wastewater treatment requirements], LTS/M [wastewater generation])

Exceedance of Wastewater Treatment Requirements. The Project involves operation and maintenance of residential, commercial, office, hotel, and entertainment uses. No industrial wastewater, which could create the need for specific changes to the WWTF, would be generated by the Project. As discussed below, a new wastewater system would be installed on-site to accommodate the flows generated by the Project. However, the wastewater generated by the Project would be typical of a mixed-use development. As a result, no specific changes to the WWTF would be required to treat these flows. Therefore, the Project would not exceed wastewater treatment requirements of the San Francisco Regional Water Board, resulting in ***no impact***.

Wastewater Treatment. Implementation of the Project would result in a total ADWF of approximately 1.75 million gpd and a total peak flow of approximately 4.6 million gpd, which would represent an increase in ADWF of 1,713,038 gpd compared to the existing ADWF on the Project site of 36,100.[72] Table 3.14-10 shows the Project's estimated wastewater generation by phase. As shown, Phase 2 would have the highest ADWF and peak flow, while Phase 5 would have the lowest ADWF and peak flow. The Project could retain existing Fire Station 10 at its current location or require relocation of the station on- or off-site. If reconstructed, the facility would be the same size as the existing facility (approximately 7,364 gsf) and employ the same number of firefighters (three), which would result in wastewater generation that would be similar to existing conditions.

Table 3.14-10. Wastewater Generated by the Project[a]

Phase	Average Dry Weather Flow	Peak Flow
1	236,432	599,080
2	653,806	1,686,715
3	136,162	358,905
4	151,538	394,745
5	100,800	286,900
6	168,000	469,600
7	151,200	403,700
8	151,200	413,200
Total	**1,749,138**	**4,612,845**

Source: Langan Treadwell Rollo. 2015. *Sanitary Sewer Technical Memorandum for City Place Santa Clara Development*. Prepared for Related Santa Clara, LLC. August 24.
[a] gallons per day.

[72] Langan Treadwell Rollo. 2015. *Sanitary Sewer Technical Memorandum for City Place Santa Clara Development*. Prepared for Related Santa Clara, LLC. August 24.

As previously discussed, the WWTF treats an average of 110 mgd of wastewater and has the capacity to treat up to 167 mgd.[73] The City's current ADWF is 12.8 mgd, based on 2009 data, while the City's allocation of treatment capacity is 23.103 mgd. The Project's ADWF of 1.75 mgd would increase the City's current ADWF to 14.55, which is well within the City's remaining allocation of treatment capacity of 10.303 mgd. As such, implementation of the Project would have a ***less-than-significant*** impact related to wastewater treatment.

On-site Wastewater Delivery System.[74] The proposed sanitary sewer system for the Project would connect to the existing City gravity trunk sewers between Parcels 3 and 4, in Lafayette Street and in Stars and Stripes Drive. The preliminary locations for the points of connection and for the routing of the sewers within the development parcel are provided in the Sanitary Sewer Technical Memorandum. The preliminary design includes multiple gravity sanitary sewer systems with laterals, mains, manholes, and cleanouts designed per City standards. The pipes would have the capacity to convey the total peak wet weather flow at a minimum velocity of 2 feet per second when flowing half full and no more than 75 percent full. Preliminarily, Parcel 1 and Parcel 2 would connect to the westernmost 42-inch sewer in Lafayette Street. Parcels 3 and 4 would connect to the 42-inch sewer between Parcels 3 and 4. Parcel 5 would connect to the Stars and Stripes Drive system. The Stars and Stripes Drive system would need to be completely replaced to accommodate the proposed below-grade parking structures. The systems are proposed as a looped system to provide redundancy as required by the City. The extent of the improvements to the wastewater system would consist of roughly the same area of ground disturbance as the Project and its off-site improvements. As such, implementation of the Project would have a ***less-than-significant*** impact related to the on-site wastewater delivery system.

Off-site Wastewater Delivery System.[75] The City's existing trunk sewer system downstream of the Project showed sufficient capacity to accommodate the additional peak sanitary sewage flow without triggering the need for improvements. The model predicts that without the Project, the total effluent flow based on the 2035 flow will be 43.0 mgd. With the Project, the total effluent flow to the pump stations would be 44.8 mgd.

The City's model did not include the Rabello and Northside Pump Stations, which are the last two pump stations prior to discharge of the flow to the treatment facility. However, the 2035 estimated peak flow of 44.8 mgd, which includes the Project, is approximately 6.6 mgd higher than the current Rabello and Northside Pump Station system's Firm Capacity of 38.2 mgd. The current flow to the Rabello and Northside Pump Station system is 37.2 mgd.[76] Therefore, the Firm Capacity of these pump stations would need to be upgraded to meet the demand of the Project (which would contribute 1.8 mgd to the peak flow at the pump stations) as well as the development analyzed in the 2035 General Plan (which would contribute 6.6 mgd to the peak flow at the pump stations, including the flow from the Project). The upgrades would include additional wet well and pumping capacity as well as force main improvements. However, the City's peak flow estimates included all planned major developments and redevelopments as well as potential increased densities in certain areas consistent with the City's 2035 General Plan. As such, the Project is not the sole contributor of wastewater to the system and would not

[73] Langan Treadwell Rollo. 2015. *Preliminary Infrastructure Master Plan for City Place Santa Clara*. Prepared for Related Santa Clara, LLC. June 30.

[74] Langan Treadwell Rollo. 2015. *Preliminary Infrastructure Master Plan for City Place Santa Clara*. Prepared for Related Santa Clara, LLC. June 30.

[75] Langan Treadwell Rollo. 2015. *Sanitary Sewer Technical Memorandum for City Place Santa Clara Development*. Prepared for Related Santa Clara, LLC. August 24.

[76] Gomez, Gustavo. Principal engineer for the Department of Public Works, City of Santa Clara. August 27, 2015—response to Debby Fernandez, City of Santa Clara.

be solely responsible for the system upgrades that would be required as part of the 2035 General Plan. The City has anticipated that the Project would contribute 1.8 mgd (or approximately 27 percent of 6.6 mgd) to the peak flow at the pump stations in 2035.[77] As no flow from the Project site was previously included in the City's hydraulic model developed for the 2035 General Plan, a possible scenario is that the Project would be responsible for approximately 27 percent (1.8 mgd/6.6 mgd) of the improvement costs. The threshold for when the pump stations improvements would be required remains to be determined by the City. An estimate of the potential timing of the pump station improvements would need to be completed soon after the Project is entitled.

Based on the analysis above, implementation of the Project would have a ***significant*** impact related to the need for additional off-site wastewater delivery systems due to future insufficient pumping capacity. Although the Project would have a less-than-significant impact related to wastewater treatment facilities and on-site wastewater delivery systems, the Project would contribute considerably to the need for additional off-site wastewater delivery systems due to future insufficient pumping capacity, which is considered a considerable contribution to a ***significant cumulative*** impact.

MITIGATION MEASURE. Implementation of Mitigation Measure UT-3.1, below, would address the Project's contribution to a cumulative wastewater pumping capacity deficit. Therefore, it would reduce potential wastewater infrastructure impacts during Project operation to ***less than significant with mitigation***.

UT-3.1: *Make a Fair-Share Contribution to Upgrading the Rabello and Northside Pump Station System's Capacity.* The City shall conduct detailed engineering study and analysis to determine the precise size and timing needed for the required pump station capacity upgrades to address overcapacity due to projected cumulative development. The City shall implement the required capacity upgrades and the Project Developer shall fund its fair share of such upgrades. The City shall determine the fair-share cost contribution for the Project based on the Project's percent of wastewater flow cumulative capacity needs above the current pump capacity (based on conceptual planning to date, that fair share is estimated as 27 percent of 2035 cumulative overcapacity amount). The City may require the Project Developer to fund the design and construction of the conveyance capacity upgrades to the Rabello and Northside Sanitary Sewer Pump Stations concurrent with construction of Phase 2 of the Project; the pump station upgrades would be designed to address overcapacity due to projected cumulative development. If the Project Developer is required to fund pump station upgrade costs, with the exception of costs attributable to the Project's fair share contribution to the upgrade, the City would reimburse the Developer for the design and construction costs through first (a) refunding the Project's Sanitary Sewer Conveyance Fees already paid by Developer or crediting those fees when due and (b) providing to Developer Sanitary Sewer Conveyance Fees collected from developers of projects that would use the Rabello and Northside Sanitary Sewer Pump Stations.

[77] A technical memorandum dated August 6, 2015, was prepared for the City of Santa Clara by RMC Water and Environment entitled *Sanitary Sewer Capacity Evaluation for the City Place Development Site.*

Impact UT-4: Stormwater Generation. The Project would require the construction of new stormwater drainage facilities or the expansion of existing facilities, but the construction of such facilities would not cause significant environmental effects. (LTS/M)

As discussed in Section 3.10, *Hydrology and Water Quality*, a preliminary evaluation of the drainage infrastructure for the Project indicated sufficient storage and pumping capacity within the current system (assuming existing conditions) to convey 100-year peak flows safely. The proposed stormwater drainage system for the Project would include below-grade gravity network of pipes, catch basin, manholes, water quality treatment measures, and other appurtenances. The building drainage would be via internal systems piped directly to the storm drains. Any potential additional sources of runoff created by the Project would be treated with the stormwater management measures described in Mitigation Measure WQ-1.1 in Section 3.10, *Hydrology and Water Quality*. The City's drainage channel from Tasman Drive to the Eastside Retention Basin next to the Guadalupe River needs to be cleared of vegetation for conveyance capacity.

Construction impacts are discussed throughout this EIR and would, in some circumstances, result in significant impacts prior to mitigation. All relevant mitigation measures included for construction in other EIR sections would apply to the construction of all Project stormwater drainage facilities on- and off-site. As such, implementation of the Project would have a ***less-than-significant impact with mitigation*** related to secondary environmental effects of new or modified stormwater drainage facilities.

Impact UT-5: Landfill Capacity. The Project would be served by a landfill with sufficient permitted capacity to accommodate the Project's solid waste disposal needs. (LTS)

Project Construction. All phases of construction, except for Phase 2, would include the clearing of existing paving, concrete, and other materials. Organic materials cleared during construction would be reused for fill in newly landscaped areas, and the existing paving and concrete would be sent to the Zanker Material Processing Facility in San José. It is expected that 100 percent of the demolition materials would be recycled or reused during all phases except for Phase 2. Phase 2 of construction (Parcel 4) would include the demolition of existing buildings, concrete retaining walls, paving, concrete, and other materials.

The majority of total demolition material from the entire Project site would be recycled at the Zanker Material Processing Facility. However, only approximately 40 percent of demolition material from the existing buildings at Parcel 4 would be recycled, with the rest of the building demolition debris sent to the Newby Island Landfill. In total, the Project is expected to result in approximately 81,267 cy of organic materials and 41,274 cy of demolition materials, as follows.

- 5,310 cy of organic materials and 6,550 cy of demolition materials in Phase 1.
- 19,436 cy of organic materials and 19,550 cy of demolition materials in Phase 2.
- 7,256 cy of organic materials and 605 cy of demolition materials in Phase 3.
- 521 cy of organic materials and 13,242 cy of demolition materials in Phase 4.
- 13,242 cy of organic materials and 521 cy of demolition materials in Phase 5.
- 14,126 cy of organic materials and 36 cy of demolition materials in Phase 6.
- 10,676 cy of organic materials and 420 cy of demolition materials in Phase 7.
- 10,700 cy of organic materials and 350 cy of demolition materials in Phase 8.

As discussed previously, the Newby Island Landfill has a permit to accept a maximum of 3,260 tons of solid waste per day; it currently accepts an average of 2,400 tons per day.[78] Zanker Material Processing Facility has a permit to accept 4,400 tons per day; it currently processes approximately 2,000 tons per day.[79,80] Phase 2 would generate the most demolition waste per day and provide for the most conservative analysis of solid waste disposal during construction of the Project. Of the 19,550 cy of demolition materials generated during Phase 2, it is estimated that approximately 15,970 cy of waste would be due to building demolition. Approximately 60 percent (or 9,580 cy) of the 15,970 cy of waste would be taken to the Newby Island Landfill. This activity is projected to occur over 29 working days, which would result in 330 cy per day being taken to the Newby Island Landfill. The remainder of the 19,550 cy of demolition materials (3,580 cy) is expected to be recycled and taken to the Zanker Material Processing Facility. This activity is projected to occur over 29 working days, which would result in 123 cy per day being taken to the Zanker Material Processing Facility. As such, the demolition waste generated by the Project during Phase 2 (when the most demolition waste would be generated per day) would constitute 38 percent of Newby Island Landfill's remaining daily permitted capacity and 5 percent the Zanker Material Processing Facility's remaining daily permitted capacity.

Project Operation. As discussed above, the Newby Island Landfill has a permit to accept a maximum of 3,260 tons of solid waste per day and currently accepts an average of 2,400 tons per day. Operation of the Project would result in a total solid waste generation of approximately 17,944 tons per year (without any diversion), which would represent an increase in solid waste generation of 17,659 tons per year compared to the existing solid waste generation on the Project site of 285 tons per year. The Project could retain existing Fire Station 10 at its current location or require relocation on- or off-site. If reconstructed, the facility would be the same size as the existing facility (approximately 7,364 gsf) and would employ the same number of firefighters (three), which would result in a solid waste generation that would be similar to existing conditions during operation.

The Project would comply with the mandatory requirements of the Santa Clara Commercial and Residential Recycling Programs to help the City meet its waste diversion goal of 50 percent as well as the City ordinances that regulate single-use carryout bags and expanded polystyrene foam food service ware. Solid waste reduction strategies that would be implemented as part of the Project include optimization of an organic waste collection system to support operations at Mission Trail Waste Systems, grease collection/recycling for off-site biofuel conversion, and triple-chute waste collection in proposed residential and hotel buildings. The Project would attempt to achieve a diversion rate of 50 percent. Assuming a 50 percent diversion rate, implementation of the Project would result in a total solid waste generation of approximately 8,972 tons per year that would be disposed of at the Newby Island Landfill, which represents an increase in solid waste generation of 8,687 tons per year compared to the existing solid waste generation on the Project site of 285 tons per year. As such, the solid waste generated by the Project that would need to be disposed of at a landfill would constitute approximately 3 percent of the remaining daily permitted capacity at the Newby Island Landfill.

The solid waste produced on the Project site would be a small amount of solid waste compared to Newby Island Landfill's daily permitted remaining capacity. Therefore, the Project would be served by a landfill with sufficient permitted capacity to accommodate the Project's solid waste disposal needs.

[78] Cheso, Gil. Division Manager for Republic. June 8, 2015—response to Debby Fernandez, City of Santa Clara.

[79] Gross, Michael. Director of sustainability for Zanker Recycling. August 28, 2015—response to Debby Fernandez, City of Santa Clara.

[80] Zanker Recycling. n.d. *About Us*. Available: http://www.zankerrecycling.com/zanker-facilities/about-us/. Accessed: August 28, 2015.

Furthermore, the City currently has a contract with owners of Newby Island Landfill to provide disposal capacity through 2024. Newby Island Landfill is currently in the process of seeking authorization from San José to expand the permitted capacity to accept an additional 15.1 million cy.[81] If the landfill is not available to accept waste, the City will prepare a contract with another landfill with capacity, such as Guadalupe Mines in San José, which is anticipated to close in 2048.[82,83] The City does not have any other agreements or plans to enter into agreements with another disposal facility prior to 2024.[84] Therefore, the Project can be served by a landfill with capacity, and the Project's impact related to solid waste and landfill capacity would be ***less than significant***.

Impact UT-6: Energy Demand. The Project would not result in wasteful, inefficient, or unnecessary energy use with mitigation, and the construction impacts of necessary energy infrastructure would be less than significant with mitigation. (LTS/M)

Gas and electric service to the Project site would be provided to meet the needs of the Project as required by California Public Utilities Commission, which obligates SVP and PG&E to provide service to its existing and potential customers via the proposed electric and natural gas systems described below.

Energy Demand. The Project would use energy for both construction and operation. Energy sources include fuels for trucks and construction equipment, and electricity and natural gas for operation of the distribution facility. The estimated fuel and other energy usage for the Project on an annual basis have been quantified as part of the GHG analysis for the Project (see Section 3.5, *Greenhouse Gas Emissions*).

During construction, the Project would consume an estimated 2.8 million gallons of fuel.

During operations, the Project's energy demand is estimated as follows.

- **Electricity**: The Project would consume approximately 120 to 121 million kWh of electricity per year with implementation of the on-site solar photovoltaic systems, which would represent an increase in electricity demand of 117 to 118 million kWh per year compared to the existing electricity demand on the Project site of 3 million kWh per year.
- **Natural Gas**: The Project would consume approximately 183 to 206 million kBTU of natural gas per year, which would represent an increase in natural gas demand of 178 to 201 million kBTU per year compared to the existing natural gas demand on the Project site of 5 million kBTU per year.
- **Other Fuel:** The Project would also consume up to approximately 900 to 1,000 billion BTU of transportation fuel per year during normal operations, which represents an increase in fuel demand of 870 to 970 billion BTU per year compared to the existing fuel demand on the Project site of 33 billion BTU per year. Based on the Project's yearly vehicle trips, the Project's average trip would consume 61 to 62 BTU of transportation fuel per vehicle trip.

---

[81] Bauer, Ian. 2015. *San José Planners Delay Vote on Newby Island Landfill Expansion to February*. Available: http://www.mercurynews.com/milpitas/ci_27374273/san-jose-planners-delay-vote-newby-island-landfill. Accessed: February 10, 2015.

[82] City of Santa Clara. 2011. *City of Santa Clara Draft 2010–2035 General Plan: Integrated Final Environmental Impact Report*. January 2011.

[83] CalRecycle. n.d. *Facility/Site Summary Details: Guadalupe Sanitary Landfill (43-AN-0015)*. Available: http://www.calrecycle.ca.gov/SWFacilities/Directory/43-AN-0015/Detail. Accessed: June 10, 2015.

[84] Staub, Dave. Deputy director of the Department of Public Works, City of Santa Clara. August 28, 2015—response to Debby Fernandez, City of Santa Clara.

Energy Use Efficiencies. As described herein, the Project would include a range of energy-use efficiencies.

- The Project Developer will pursue Leadership in Energy and Environmental Design (LEED) for Neighborhood Development (LEED-ND) certification for the proposed City Center, LEED v2009 Gold for the proposed commercial buildings, and LEED v2009 Silver for the proposed residential buildings. This LEED program includes strategies that optimize the energy performance and environmental and health benefits for the buildings and their inhabitants. Energy reduction strategies that would be implemented include energy efficiency measures for the building envelope, HVAC, and lighting. While the exact building energy efficiency resulting from LEED certification was not calculated as the specific measures will be determined during design, it is expected that building energy would be reduced by an estimated 10 percent compared to average building energy consumption. In addition, the Project would include on-site solar photovoltaic systems that would provide an estimated 10 percent of the building electricity demand.
- The Project would also incorporate features to reduce per capita water use, such as low-flow fixtures as well as native and drought-resistant plants, as discussed in Impact UT-1, which would reduce indoor water demand by 10 percent and outdoor water demand by 20 percent, with a corresponding reduction in water pumping electricity demand.
- As detailed in Section 3.3, *Transportation/Traffic*, the Project is a mixed-use project that is located near existing transit lines, which would reduce vehicle trips and associated fuel consumption compared to average development. It is estimated that compared to a development without the mixed-use elements and location near transit lines, the Project would have 9 percent less daily vehicle trips and thus the associated fuel consumption.[85]

Based on the above analysis, the Project would be a consumer of energy, including the transportation energy necessary for construction and ongoing operations. In addition, with mitigation identified in this EIR for other environmental topics, energy consumption would be reduced even further, as follows.

- As discussed in Section 3.4, *Air Quality*, the Project would implement Mitigation Measures AQ-2.1, which would require the use of newer off-road construction equipment that is generally more fuel efficient than older equipment. Mitigation Measure AQ-2.2 would require the use of a modern on-road fleet during construction, which would also result in more fuel efficient vehicles.
- As discussed in Section 3.5, *Greenhouse Gas Emissions*, the Project would implement Mitigation Measure GHG-1.1, which would require the use of alternative fuels for 30 percent of construction diesel equipment. Mitigation Measure GHG-1.2 would require a series of measures that would reduce energy consumption derived from the City's Climate Action Plan, including: requiring new buildings to be 15 percent more efficient than the current 2013 Title 24 requirements; incorporating a total of 29 percent of renewable energy to meet the Project's electricity demand through on-site solar or renewable energy purchase (including the Project's commitment to 10 percent of on-site solar); installing electrical outlets for electrical landscaping equipment (which is more efficient than fossil-fuel landscaping equipment); installing electric vehicle (EV) charging stations and preferential parking (EVs are more energy efficient than fossil-fueled vehicles); and planting of shade trees and pavement treatments for uncovered parking (which reduces the urban heat island effect and thus reduces energy demand for building air conditioning).

[85] See Appendix 3.3 of this Draft EIR.

- As discussed in Section 3.3, *Transportation/Traffic,* Mitigation Measure TRA-1.1 would require the Project Developer to prepare and implement a Transportation Demand Management (TDM) plan to reduce office and residential vehicle trips. Implementation of Mitigation Measure TRA-1.1 would result in the reduction of daily vehicle trips by 2 percent (beyond the project trips) and the corresponding savings in operational transportation energy. Combining the Project design and Project mitigation, the Project would have approximately 11 percent less daily trips (and associated vehicle fuel consumption) than a similar size project that did not have the mixed use elements, transit location, or TDM mitigation.

With mitigation, the Project would include a number of improvements that would result in greater energy efficiency than required in statutes (e.g. Title 24) and in lower fuel consumption than similarly-sized developments that do not have the mixed use, transit location, and TDM reduction elements included in this Project. Therefore, the Project would not result in the wasteful, inefficient, or unnecessary use of energy. Impacts would be ***less than significant with mitigation***.

Electric System Infrastructure.[86] As previously discussed, SVP would be the service provider for electricity to the Project. SVP has confirmed that to provide electrical service to the Project, new circuits would need to be installed and extended from the existing Northern Receiving Substation located south of Levi's Stadium. Specifically, it is expected that four new 600-amp, 12 kV feeder lines would be needed to serve Parcels 4 and 5. Two more feeder lines would be required for Parcel 2, and one each for both Parcels 1 and 3, for a total of eight new feeders. The feeder lines would be installed as part of a multi-circuit conduit bank. Accordingly, it is expected that two new trench routes, each typically 36 inches wide by 60 inches deep, would need to be extended approximately 1,800 feet from the substation to the south end of the Project site. Further study is needed to determine the precise routing of the new feeder-lines throughout the development.

The Project Developer would be responsible for trenching and installing all new SVP conduits and substructures. SVP does not utilize sub-surface equipment. All switches and transformers would be pad-mounted, and locations would need to be coordinated with SVP during the design stages. With build-out of the Project, where utilities pass from pile to on-grade support, connections capable of extension and vertical movement would be required due to differential movements caused by settlement of the surrounding ground. Some of the existing overhead SVP infrastructure along Lafayette Street may need to be removed and reconstructed to underground duct banks to accommodate access to Parcel 1 and 2.

Construction impacts are discussed throughout this EIR and would, in some circumstances, result in significant impacts prior to mitigation. All relevant mitigation measures included for construction in other EIR sections (e.g., Mitigation Measures AQ-2.1, AQ-2.2, AQ-2.4, and GHG-1.1) would apply to the construction of all Project energy infrastructure improvements both on- and off-site. As such, implementation of the Project would have impacts that are ***less than significant with mitigation*** related to secondary environmental effects of new or modified electrical infrastructure.

Natural Gas System Infrastructure.[87] As previously discussed, PG&E would be the service provider for natural gas to the Project. A 4-inch gas main is located north–south along the east side of Lafayette Street, and a second 4-inch main is located along the east side of Great America Parkway adjacent to Parcel 4. It is feasible that the existing 4-inch gas mains in the vicinity could be extended into the Project site to

[86] Langan Treadwell Rollo. 2015. *Preliminary Infrastructure Master Plan for City Place Santa Clara*. Prepared for Related Santa Clara, LLC. June 30.

[87] Langan Treadwell Rollo. 2015. *Preliminary Infrastructure Master Plan for City Place Santa Clara*. Prepared for Related Santa Clara, LLC. June 30.

provide gas service, assuming standard commercial gas loads are needed. It is not likely that the gas facilities along Stars and Stripes Drive could be utilized. Extending the gas service from the 4-inch gas main from Lafayette Street into Parcels 5 and 4 would require crossing the Union Pacific Railroad right-of-way. This crossing, if necessary, would require railroad permits. If the total expected gas loads of the Project are sufficiently large, PG&E may require the installation of a new gas regulator station to serve the Project. The proximity of the high-pressure transmission line provides the capacity to provide service to a gas regulator station, if one is required. A new gas regulator station would take approximately three years for PG&E to plan, design, and build. It is assumed that the gas regulator station would be sited on the Project site, within the area of anticipated ground disturbance. Any street improvements to Lafayette Street (e.g., road widening, road overlay) would need to be reviewed by PG&E to ensure that the integrity to their gas facilities would be maintained.

PG&E gas mains would typically be extended in a joint trench with SVP electric facilities. The Project Developer is responsible for all trenching and has the option to install gas facilities and to be credited by PG&E for the estimated cost of the installation.

The landfill gas source for the Ameresco Methane Plant is declining over time due to degradation of solid waste in the former landfill. This would occur with or without the Project, and thus the Project would not affect this energy source.

Construction impacts are discussed throughout this EIR and would, in some circumstances, result in significant impacts prior to mitigation. All relevant mitigation measures included for construction in other EIR sections would apply to the construction of all Project energy infrastructure improvements both on- and off-site. As such, implementation of the Project would have impacts that are ***less than significant with mitigation*** related to secondary environmental effects of new or modified natural gas infrastructure.

Conclusion. Based on the analysis above, the energy-saving features of the Project, including those listed in the mitigation measure noted above, would result in a Project that would exceed California's Title 24 standards. Construction energy usage would be reduced through the use of energy-efficient construction equipment and trucks and the use of alternative fuels. Project design features and Mitigation Measure GHG-1.2 would result in an estimated 15 percent reduction in electricity and natural gas demand. Project design would reduce demand for grid electricity by 10 percent due to the use of on-site solar, which may be increased by implementation of Mitigation Measure GHG 1.2 if the Project Developer decides to meet the mitigation requirement with additional on-site solar. Project design features and Mitigation Measure TRA-1.1 would result in an estimated 11 percent savings in operational transportation energy compared to a similarly sized project that did not have the mixed use characteristics, transit location, and TDM measures of the Project. Other measures would result in further reductions of operational energy consumption. Based on this information, the Project, with mitigation, would result in lower energy consumption compared to a similarly size project that did not incorporate the Project's design features and mitigation. Therefore, the Project would not result in inefficient, wasteful, or unnecessary consumption of energy. As noted above, the Project's secondary environmental effects related to increase energy demand can also be addressed such that these effects would be ***less than significant with mitigation***.

Cumulative Impacts

The geographic context for the analysis of cumulative utilities and service systems impacts is the service area of the utility provider. Cumulative impacts associated with water demand are presented in Impact UT-1. The geographic context for cumulative impacts on wastewater treatment is the WWTF service area. With regard to storm drainage, the geographic context would be the City. The geographic context for cumulative impacts on solid waste is the Newby Island Landfill service area, including San José, Milpitas, Santa Clara, Cupertino, Los Altos, and Los Altos Hills. In addition, the geographic context for cumulative impacts on electricity and natural gas is PG&E's service area in Northern California.

Cumulative impacts are addressed only for those thresholds that would result in a Project-related impact, whether it be less than significant, significant, or significant and unavoidable. If the Project would result in no impact with respect to a particular threshold, it would not contribute to a cumulative impact. Therefore, no analysis would be required.

The Project would have no impact related to the exceedance of wastewater treatment requirements. In addition, the Project would comply with applicable federal, State, and local statutes and regulations related to solid waste, resulting in no impact.

This cumulative analysis examines the effects of the Project in the relevant geographic area in combination with other current projects, probable future projects, and projected future growth.

Impact C-UT-2: Cumulative Utilities Impacts. The Project, in combination with other foreseeable development in the vicinity, would not require or result in the construction of new wastewater or stormwater treatment facilities or the expansion of existing treatment facilities; result in a determination of inadequate capacity to serve the expected demand and existing entitlements; or result in wasteful, inefficient, or unnecessary energy use. However, the Project would be served by a landfill with insufficient permitted capacity to accommodate solid waste disposal needs. The Project would also contribute to cumulative energy demands that may result in significant and unavoidable secondary environmental impacts related to long-term energy generation and transmission. (SU)

Wastewater Treatment Facilities

As discussed in Section 3.1, *Land Use and Planning*, there would typically be no cumulative impact as a result of other current development in the ABAG region because the growth associated with a project would have been accounted for in a jurisdiction's planning documents and incorporated into ABAG projections. It is assumed that all projects, with the exception of Tasman East, identified in Section 3.1, *Environmental Impact Analysis*, are accounted for in their respective general plans and, in turn, are included in ABAG projections. However, the growth that would result from the Project is not accounted for in the City's General Plan, nor is it anticipated in regional planning efforts. In addition to the Project, Tasman East contains 1,820 dwelling units that were not accounted for in the growth projections for the City's General Plan.

As previously discussed, the WWTF treats an average of 110 mgd of wastewater and has the capacity to treat up to 167 mgd.[88] The City's current ADWF is 12.8 mgd, based on 2009 data, while the City's allocation of treatment capacity is 23.103 mgd. The City's General Plan estimated 2035 ADWF with

[88] Langan Treadwell Rollo. 2015. *Preliminary Infrastructure Master Plan for City Place Santa Clara*. Prepared for Related Santa Clara, LLC. May 1.

planned development to be 20.1 mgd. Because the Project (estimated ADWF of 1.75 mgd) and Tasman East (estimated ADWF of 0.22 mgd) are not included in the General Plan, they would increase cumulative city demand to 22.07 mgd, which would still be less than the City's current allocation. Thus, the cumulative effects of development on wastewater treatment capacity would be less than significant, and the Project would result in a less than cumulatively considerable contribution. However, as discussed under Impact UT-2, the Project would contribute 22 percent of the 2035 cumulative over-capacity pumping capacity amount to the Rabello and Northside pump stations. Thus, prior to application of mitigation measures, the Project would result in a cumulatively considerable contribution to impacts related to wastewater pumping facilities. Implementation of Mitigation Measure UT-3.1 would require a study to determine the precise size and timing needed for upgrades at affected facilities, as well as a requirement that the Project Developer pay a fair share for such upgrades. With implementation of Mitigation Measure UT-3.1, cumulative development that could generate wastewater in excess of wastewater pumping capacity would not be approved and a significant and unavoidable impact would not occur. After mitigation, the Project's contribution to this impact would be ***less than cumulatively considerable***.

Stormwater Treatment Facilities

Development in the City would consist primarily of redevelopment, which would not substantially increase impervious surfaces in the City. Existing regulations require new projects to address the need for stormwater treatment. As such, the cumulative impacts of development on the City's stormwater drainage facilities would be ***less than significant***.

Solid Waste

Data presented in the Five-Year Countywide Integrated Waste Management Plan for Santa Clara County show that solid waste disposal for the City decreased from 240,061 tons in 1990 to 162,325 tons in 2005, representing a 32 percent decrease.[89] The City has an arrangement with the owners of the Newby Island Landfill, as well as other landfills located outside of the County, to provide disposal capacity for the City through 2024, according to the City's General Plan.[90,91] The Newby Island Landfill has a remaining disposal capacity of 21.2 million cy.[92] Given the lack of long-term assurances regarding landfill capacity, the City's General Plan EIR determined that cumulative impacts to solid waste disposal are significant. The cumulative context for this analysis also includes the Project and the Tasman East project, both of which were not anticipated in the General Plan and growth projections. Thus, cumulative impacts to solid waste are similarly considered ***significant***.

[89] County of Santa Clara. 2007. Five-Year CIWMP/RAIWMP Review Report. August 22. Available: http://www.sccgov.org/sites/iwm/Documents/CoIWMP/SCC-2nd-5yr-rpt-2006-rev4.pdf. Accessed: June 10, 2015.

[90] City of Santa Clara. 2010. *Resolution No. 10-7737*. Available: http://santaclaraca.gov/modules/showdocument.aspx?documentid=2744. Accessed: May 21, 2015.

[91] City of Santa Clara. 2010. *Santa Clara General Plan.* July.

[92] CalRecycle. n.d. *Facility/Site Summary Details: Newby Island Sanitary Landfill (43-AN-0003)*. Available: http://www.calrecycle.ca.gov/SWFacilities/Directory/43-AN-0003/Detail/. Accessed: May 21, 2015.

Newby Island Landfill is currently in the process of seeking authorization from San José to expand the permitted capacity and accept an additional 15.1 million cy.[93] If the landfill is not available to accept waste, the City will prepare a contract with another landfill, such as Guadalupe Mines in San José, which is anticipated to close in 2048. The City would continue to require the Project and other foreseeable development, including Tasman East, to minimize solid waste disposal to the Newby Island Landfill through recycling and other diversion practices. Assuming a 50 percent diversion rate, implementation of the Project would result in a total solid waste generation of approximately 8,972 tons per year, which would be disposed of at the Newby Island Landfill (approximately 3 percent of remaining daily permitted capacity). According to the City's General Plan EIR, the total increase in solid waste (residential and nonresidential) associated with net new General Plan growth in 2035 would be approximately 37,000 to 42,000 tons per year.[94] The projects identified in Section 3.01, *Environmental Impact Analysis*, that are located within the City would be served by a landfill (Newby Island Landfill) with sufficient permitted capacity to accommodate the projects' solid waste disposal needs through 2024. The City has no specific plan for disposing of solid waste beyond 2024, but it would initiate a process to identify a solution prior to 2024. If the Newby Island Landfill is not available to accept waste, the City could potentially contract other landfills with adequate capacity, such as Guadalupe Mines in San José, which has capacity until 2048.[95,96] As such, the solid waste generated by the Project and other projects could be accommodated at an expanded Newby Island Landfill or an alternative landfill (e.g., Guadalupe Mines). However, given the uncertainties concerning the location of solid waste disposal beyond 2024, the Project's contribution to this cumulative impact is cumulatively considerable. Because there are no feasible mitigation measures to address solid waste issues, this cumulative impact is considered ***significant and unavoidable***.

Energy Demand

All new development would be required to comply with California's Title 24 energy conservation standards for new construction, which require specific energy-conserving design features, the use of non-depletable energy resources, or a demonstration that buildings would comply with a designated energy budget. Thus, relative to commercial or residential development, a cumulatively wasteful or inefficient use of electricity or natural gas would not occur.

Regarding transportation energy, transportation vehicles, including both passenger and freight vehicles, are now heavily regulated in terms of fuel efficiency with aggressive State and federal regulatory requirements (e.g., the Pavley/Advanced Clean Car standards in California, the federal Corporate Average Fuel Economy standards, and similar efforts concerning heavier vehicles) that require progressive improvements in vehicle efficiency over time. As such, cumulative transportation energy use is not expected to be wasteful or inefficient.

---

[93] Bauer, Ian. 2015. *San José Planners Delay Vote on Newby Island Landfill Expansion to February*. Available: http://www.mercurynews.com/milpitas/ci_27374273/san-jose-planners-delay-vote-newby-island-landfill. Accessed: February 10, 2015.

[94] City of Santa Clara. 2011. *City of Santa Clara Draft 2010–2035 General Plan: Integrated Final Environmental Impact Report*. January.

[95] City of Santa Clara. 2011. *City of Santa Clara Draft 2010–2035 General Plan: Integrated Final Environmental Impact Report*. January.

[96] CalRecycle. n.d. *Facility/Site Summary Details: Guadalupe Sanitary Landfill (43-AN-0015)*. Available: http://www.calrecycle.ca.gov/SWFacilities/Directory/43-AN-0015/Detail. Accessed: June 10, 2015.

Regarding other energy consumption, industrial development would result in increased consumption of other fuels but large stationary sources are regulated under the State's Cap and Trade system for GHG emissions which will push sources to ever more efficient use of energy over time.

The City of Santa Clara's CAP requires new development to include electricity and natural gas efficiency improvements and incorporate TDM efforts to reduce the number of vehicle miles traveled (and associated transportation fuel consumption), which will further the efficient use of energy. Consequently, the Project, in combination with other development in the Project area, would not be expected to use natural gas, electricity, or transportation fuels in a wasteful manner. Cumulative impacts related to the wasteful or inefficient use of energy would be ***less than significant***.

Existing and planned gas and electric service would be provided to meet the needs of other current projects, as required by the California Public Utilities Commission (CPUC), which obligates PG&E to provide service to its existing and potential customers. Over time, California has been highly successful at controlling the growth of electricity use overall, but other development across the PG&E service area could still require the construction of new electricity generation facilities and transmission lines. In addition, with the State's requirements for increased portfolios of renewable energy generation, there is an increasing demand for new renewable energy facilities (such as solar and wind), which can have secondary environmental impacts. Increased demand for transportation fuels (whether gasoline/diesel or alternatives to gasoline/diesel, such as ethanol or biodiesel) can also result in additional facilities to produce, process, and transport such fuels. Thus, although other current projects would be required through existing regulations to be efficient with respect to energy use, there is still the potential for secondary environmental impacts from meeting cumulative energy demands. The California Energy Commission and CPUC are responsible for permitting and environmental review of new energy generation and transmission facilities, and other agencies approve transportation fuel facilities. About 16 percent of the electricity used in the City is generated at SVP owned power plants within Santa Clara, and 84 percent is purchased from sources outside of the City.[97] The other sources of electricity are diverse and widespread, ranging from hydroelectric to wind power. Both the electricity and gas needed by other projects may in fact be generated out of State. It is therefore not reasonable to predict where the new supply sources would be located or evaluate environmental consequences from construction and operation of such facilities. Furthermore, if the new power generation facilities were to be located in California, they would be subject to environmental review and required to avoid or minimize their environmental impacts. However, it cannot be concluded that all secondary environmental impacts would be reduced to a less-than-significant level, and thus, cumulative secondary environmental impacts are considered significant. The Project, although efficient in its energy use, is of such a large scale that it would have a considerable contribution to cumulative energy demands that would be ***significant and unavoidable***.

[97] Silicon Valley Power. n.d. *General Power FAQ*. Available: http://siliconvalleypower.com/index.aspx?page=2028. Accessed: August 25, 2015.

This Page Intentionally Left Blank

Chapter 4
Other CEQA Considerations

4.1 Significant and Unavoidable Environmental Impacts

Section 21100(b)(2)(A) of the California Environmental Quality Act (CEQA) requires that a Draft Environmental Impact Report (Draft EIR) identify any significant environmental effects that cannot be avoided if the Project is implemented. Many impacts identified for the Project would either be less than significant or could be mitigated to a less than significant level. However, the Project would result in significant impacts that cannot be mitigated to less than significant levels; these impacts are listed below.

Significant and Unavoidable Project-Level Impacts

- **Conflicts with Adopted City Land Use Plans and Policies with Regard to the Jobs/Housing Balance.** The Project would be inconsistent with the City's General Plan policies aimed at improving the City's jobs/housing balance which would result in secondary significant unavoidable impacts on traffic, air quality, and GHG emissions. (LU-1)
- **Impact LU-2: Conflicts with Airport Land Use Plan and City Policies Related to Airport Noise.** The Project would be inconsistent with the Comprehensive Land Use Plan for the San José International Airport in relation to noise policies and the City's General Plan related to Airport Noise. (LU-2, and as disclosed under Impact NOI-5)
- **Signalized (Off-Site) Intersections.** The Project would add traffic to certain signalized intersections, causing them to operate at unacceptable levels of service or worsen unacceptable levels of service under existing with-Project or background with-Project conditions. (TRA-1)
- **Unsignalized (Off-Site) Intersections.** The Project would add a considerable amount of traffic to certain unsignalized intersections that would operate unacceptably under background with-Project conditions. (TRA-2)
- **Freeway Segments.** The Project would add traffic to certain freeway segments, causing them to operate at unacceptable levels of service or worsen existing unacceptable levels of service. (TRA-3)
- **Signalized (Off-Site) Intersections with Phases 1, 2 and 3.** Phases 1, 2, and 3 of the Project would add traffic to certain signalized intersections, causing them to operate at unacceptable levels of service or worsen unacceptable levels of service under existing conditions. (TRA-1a)
- **Freeway Segments.** Phases 1, 2, and 3 of the Project on Parcels 4 and 5 would add traffic to certain freeway segments, causing them to operate at unacceptable levels of service or worsen existing unacceptable levels of service. (TRA-3a)
- **Intersections with Access Variant Scheme.** With the access variant, the Project would add traffic to certain nearby intersections, causing them to operate at unacceptable levels of service or worsen existing unacceptable levels of service. (TRA-6)

- **Pedestrian Facilities.** The Project would generate substantial numbers of pedestrians traveling to transit stops along routes where sidewalk gaps exist, thus creating a hazardous condition for pedestrians. (TRA-7)
- **Transit Operations.** The Project would generate considerable amounts of traffic congestion at intersections on bus and light-rail routes in the study area, thereby increasing the travel times of buses and light-rail vehicles. (TRA-11)
- **Construction Traffic.** Construction traffic would result in short-term increases in traffic volumes that would cause significant impacts on intersection and freeway segment levels of service and temporary road closures requiring detours for vehicles accessing the Great America ACE/Capitol Corridor Station. (TRA-18)
- **Intersections with Special Event Traffic.** Project traffic would exacerbate unacceptable levels of service at intersections near the site and Levi's Stadium during special events. (TRA-19)
- **Conflict with Air Quality Plan.** The Project would conflict with or obstruct implementation of the applicable air quality plan. (AQ-1)
- **Operational Criteria Air Pollutant Emissions.** The Project would result in the generation of regional criteria pollutant emissions during operation in excess of BAAQMD thresholds. (AQ-3)
- **Generation of Regional Criteria Pollutant Emissions during Combined Project Construction and Operation.** The Project would generate regional criteria pollutant emissions during combined Project construction and operation in excess of BAAQMD thresholds. (AQ-4)
- **Exposure to Excessive Noise Levels.** The Project would expose persons to or generate noise levels in excess of standards established in a local general plan or noise ordinance or applicable standards of other agencies. (NOI-1)
- **Permanent Increase in Ambient Noise Level.** The Project would result in a substantial permanent increase in ambient noise levels in the Project vicinity above levels existing without the Project. (NOI-3)
- **Exposure of People to Noise from Airports.** The Project would be located within an airport land use plan area or, where such a plan has not been adopted, within 2 miles of a public airport or public use airport and would expose people residing or working in the Project area to excessive noise levels. (NOI-5)
- **Interference with Movement of Native Migratory Wildlife Species.** The Project would result in harm to or mortality of migratory birds or their active nests. (BIO-1)

Significant and Unavoidable Cumulative Impacts

- **Cumulative Land Use Impacts.** The Project, in combination with other foreseeable development in the nine-county ABAG region, would be inconsistent with some applicable land use plans, policies, and regulations, including those policies aimed at improving the City's jobs/housing balance. (C-LU-1)
- **Signalized (Off-Site) Intersections in Cumulative with-Project Conditions.** Increases in traffic associated with the Project under cumulative with-Project conditions would result in considerable contributions at signalized intersections operating at unacceptable levels of service during both peak hours. (TRA-14)

- **Cumulative with-Project Access Variant Intersections.** Increases in traffic associated with the Project under cumulative with-Project conditions would result in considerable contributions at intersections operating at unacceptable levels of service during both peak hours with the Project Variant Access Scheme. (TRA-16)
- **Impacts on Freeway Segments under Cumulative with-Project Conditions.** Increases in traffic associated with the Project under the cumulative with-Project conditions would result in considerable contributions to numerous freeway segments with cumulative impacts. (TRA-17)
- **Cumulative Criteria Pollutants.** The Project would result in a cumulatively considerable net increase in criteria pollutants for which the Project region is a nonattainment area for an applicable federal or State ambient air quality standard. (C-AQ-1)
- **Cumulative Health Risks.** The Project's TAC emissions could contribute to cumulative exposure health risks of sensitive receptors. The Project would also locate new receptors where they would be exposed to cumulative health risks due to cumulative TAC emissions. (C-AQ-2)
- **Greenhouse Gas Emissions.** The Project would generate GHG emissions, either directly or indirectly, that would have a significant impact on the environment. (GHG-1)
- **Conflicts with Applicable Plans and Policies.** The Project would conflict with an applicable plan, policy, or regulation adopted for the purpose of reducing the emissions of GHGs. (GHG-2)
- **Cumulative Exposure to Excessive Noise.** The Project would expose persons to or generate noise levels, in combination with cumulative development, in excess of standards established in a local general plan or noise ordinance or applicable standards of other agencies. (C-NOI-1)
- **Cumulative Utilities Impacts.** The Project, in combination with other foreseeable development in the vicinity, would not require or result in the construction of new wastewater or stormwater treatment facilities or the expansion of existing treatment facilities; result in a determination of inadequate capacity to serve the expected demand and existing entitlements; or result in wasteful, inefficient, or unnecessary energy use. However, the Project would be served by a landfill with insufficient permitted capacity to accommodate solid waste disposal needs. The Project would also contribute to cumulative energy demands that may result in significant and unavoidable secondary environmental impacts related to long-term energy generation and transmission. (C-UT-2)

4.2 Significant Irreversible Environmental Changes

Section 15126.2(c) of the State CEQA Guidelines requires that a Draft EIR evaluate significant irreversible environmental changes that would be caused by a proposed project should it be implemented and that it identify irreversible environmental changes as those involving a large commitment of nonrenewable resources or irreversible damage resulting from environmental accidents.

The Project would involve development of over 9 million square feet, which would require the use of materials such as steel and copper as well as fossil fuels during construction. The source metals used, unless they come from recycled materials, would represent an irreversible use of resources. Fossil fuels used during construction would also represent an irreversible use of oil and natural gas.

As discussed in Section 3.14, *Utilities and Service Systems*, during construction the Project would consume an estimated 2.6 million gallons of fuel and 23,000 kWh of energy.

During operations, the Project's energy demand is estimated as follows.

- **Electricity**: The Project would consume approximately 121 million kWh of electricity per year with implementation of the on-site solar photovoltaic systems, which would represent an increase in electricity demand of 118 million kWh per year compared to the existing electricity demand on the Project site of 3 million kWh per year.
- **Natural Gas**: The Project would consume approximately 214 million kBTU of natural gas per year, which would represent an increase in natural gas demand of 209 million kBTU per year compared to the existing natural gas demand on the Project site of 5 million kBTU per year.
- **Other Fuel:** The Project would also consume up to approximately 2.60 billion BTU of transportation fuel per year during normal operations, which represents an increase in fuel demand of 2.57 billion BTU per year compared to the existing fuel demand on the Project site of 33,000 million BTU per year.

To the extent that electricity supplying the Project comes from renewable sources (hydropower, sun, wind, geothermal), it would not represent an irreversible use of resources. To the extent that electricity supplying the Project comes from non-renewable sources (natural gas, coal, nuclear), it would represent an irreversible use of those resources.

Permanent visual alterations would result from the Project by constructing a significant number of multi-story buildings and new roadways on a site that is currently developed for recreational purposes, with only a few single-story buildings. Trees and mature vegetation would be removed from the existing golf course but trees would be replaced either on-site or off-site as required by City standards. As documented in Section 3.2, *Aesthetics*, these physical changes would alter views of the Project site from various locations, but they would not significantly obscure a scenic view or vista. However, even with mitigation, some local visual character would be permanently altered.

While not physically impossible to reverse, in general urban residential and commercial development, represents an irreversible commitment of land to urban uses for the long run if not permanently. For the Project, the creation of the development over the Landfill most likely represents an irreversible change, from the current golf course configuration to urban uses. It is also unlikely that the other commercial areas off the podium would ever be returned to golf course or open space use as well. Thus, the Project also represents a likely irreversible commitment to urban development use.

4.3 Growth-Inducing Impacts

Section 15126.2(d) of the State CEQA Guidelines states that an EIR should discuss "…the ways in which the project could foster economic or population growth, or the construction of additional housing, either directly or indirectly, in the surrounding environment." Growth can be induced in a number of ways, including through the elimination of obstacles to growth, through the stimulation of economic activity within the region including the generation of significant employment opportunities, or through precedent-setting action. CEQA requires a discussion of how a project could increase population, employment, or housing in the areas surrounding the project as well as an analysis of the infrastructure and planning changes that would be necessary to implement the project.

This section of the EIR discusses the manner in which the Project could affect growth in the City and the larger Bay Area. In accordance with the State CEQA Guidelines, Section 15126.2, this discussion of growth inducement is not intended to characterize the Project as necessarily beneficial, detrimental, or

of little significance to the environment. This growth inducement discussion is provided for informational purposes so that the public and local decision-makers have an appreciation of the potential long-term growth implications of the Project. Although CEQA requires disclosure of growth inducement effects, an EIR is not required to anticipate and mitigate the effects of a particular project on growth in other areas. Growth inducement has the potential to result in an adverse impact if the growth is not consistent with or accommodated by the land use plans and growth management plans and policies for the area affected. Since the general plan of a community defines the location, type, and intensity of growth, it is the primary means of regulating development and growth in that community.

In discussing growth inducement, it is useful to distinguish between direct and indirect growth. Direct growth occurs on a project site as a result of new facilities (buildings) being constructed, or an increase in developed space. As discussed in Chapter 2, *Project Description*, direct growth associated with the Project (Scheme B, the most conservative for purposes of discussing growth inducement because this scheme includes no residential units and the greatest number of employees) would amount to 9,164,400 gsf of development, which includes 6,684,400 gsf of office uses and up to 200 residential units.

Indirect growth occurs beyond a project site but is stimulated by the project's direct growth. Indirect growth is tied to increased direct and indirect investment and spending associated, such as expenditure patterns of employees associated with the Project, with the new direct growth. For example, if the Project were implemented, future workers would spend money in the local economy, and the expenditure of that money would result in additional jobs. The indirect jobs generated by a project (referred to as the "multiplier effect") tend to be relatively near the places of employment but may occur at more distant locales as well. When CEQA refers to induced growth, CEQA means all growth—direct, indirect, and otherwise defined.

The Project would result in 28,720 net new employees, which, in turn, would generate substantial demands for new housing in the City and region. As discussed in Section 3.1, *Land Use and Planning*, the development associated with the Project is in excess of what is projected in the City's General Plan and beyond what is included in the regional ABAG projections. Thus, the General Plan did not consider either the direct job growth or the indirect induced housing demand that would result from implementation of the Project. The indirect jobs generated as a result of the multiplier effect would result in an even greater exceedance of growth projections locally and regionally.

As discussed in Section 3.12*, Population and Housing*, the increase in employment at the Project site would result in an increased housing demand and an influx of new residents within Santa Clara and other jurisdictions in the region and may even result in increased housing demand outside the San Francisco Bay region in outlying areas.[1] Santa Clara County's[2] ratio for workers per household is 1.39.[3] Using this ratio, the Project would result in a total demand of approximately 20,662 housing units to

[1] Some of the employees in cities within Silicon Valley, like Santa Clara, are long-distance commuters from areas outside the Bay Area, such as San Joaquin County, who take advantage of relatively lower housing prices in outlying areas and the relatively higher salaries and/or available jobs in Silicon Valley.

[2] The Santa Clara County average of 1.39 workers per worker household is used in this analysis because the average number of new workers per worker household would be more similar to the County as a whole than the smaller City of Santa Clara profile. Workers are expected to live throughout the Bay Area, but there would be a particular concentration in the County. Therefore, the County's workers per worker household statistic is used in the calculations.

[3] U.S. Census Bureau. 2013. American Fact Finder, American Community Survey (ACS). 2011-2013 ACS 3-Year Estimates. "Selected Characteristics of the Native and Foreign-born Populations." Santa Clara County, California. ID S0501. Available: <http://factfinder.census.gov/faces/nav/jsf/pages/searchresults.xhtml?refresh=t>. Accessed: October 27, 2104.

support the employment from the Project.[4] Approximately 13.5 percent of the City's workforce are also residents; this ratio was used to estimate the number of new workers who may seek housing in the City (2,789 units).[5] Thus, the Project would result in an indirect housing demand of 2,789 units in the City and the Project could, using these assumptions, create a demand for roughly 17,873 units outside the City. As discussed in Section 3.1, *Land Use and Planning*, the jobs/housing ratio anticipated by both the City's General Plan as well as ABAG would worsen with the Project due to the influx of employees into the City. This manifests in an upward pressure on housing demand because of low supply, which in turn results in workers seeking housing farther and farther away from the Project site. However, as discussed further below, it is not possible to predict with certainty whether the percentage of employees both living and working in the City will continue into the future, nor it is possible to predict accurately exactly where employees from outside the City might live.

Together, as discussed, the direct employment growth and the associated implications for housing demand would create a potential need for the City to update General Plan projections to account for this growth. Mitigation Measure LU-1.1 requires the City to explore permitting higher residential densities in the City as well as allowing residential land uses in existing non-residential areas. However, because this mitigation measure relies on an iterative General Plan process ultimately requiring approval from City Council, it cannot be stated with certainty whether and when the mitigation measure can be implemented and how effective it may be in adding additional housing in the City. In addition, adding new housing to the City's General Plan would only potentially reduce some of the impacts within the more immediate Project vicinity because it is not considered likely or feasible for the City to absorb all of the induced housing demand, and thus Mitigation Measure LU-1.1 would not mitigate the Project's effect on induced growth in the region and potentially beyond.

Employees of the Project could be housed throughout the region. Housing could be dispersed beyond County boundaries consistent with 2010 Census data, indicating that 78 percent of commuting trips within Santa Clara County originate in the County, with the remaining 22 percent coming from the larger region.[6] Alternatively, more local housing could be provided by cities within Santa Clara County, thereby lessening the commute for those travelling to the Project site by providing local housing options. However, the future location of housing demand cannot be predicted with certainty because it is influenced by a complex myriad of factors, including housing supply market, demographics of new employees, traffic and transit conditions, salaries of new employees, and preferences of new employees.

Because of the lack of adequate housing throughout the Bay Area, residential demand could occur as far away as Monterey or San Joaquin counties. Regardless of where it is located, future housing development will result in environmental impacts. Secondary environmental impacts in the potentially affected areas would depend on the location of the new development as well as the intensity of the development. CEQA does not require that a detailed analysis be conducted for these secondary impacts but, due to the magnitude of the housing demand created by the Project, this discussion considers very broadly the types of impacts that could occur for infill/redevelopment, suburban, and rural residential development. Table 4-1 outlines the more likely ways that each type of development could affect resources. This table should not be taken to conclude that significant impacts under each resource area

[4] A total of 20,662 new housing units required to support the Project = 28,720 employees / 1.39 worker per housing ratio

[5] A total of 2,789 new housing units needed within the City to support the Project = 13.5 percent * 20,662 total new housing units required to support the Project

[6] U.S. Census Bureau. 2010. Census 2010, Commuting and Employment Data, Table 2, Residence County to Workplace County Flows for the United States and Puerto Rico Sorted by Workplace Geography: 2006-2010. Available: <http://www.census.gov/population/metro/data/other.html>. Accessed: June 21, 2015.

checked would occur or that no impacts would occur in resource areas that are not checked; it is only to note that the areas of more likely impact tend to vary by different development settings. Resource topics are broken down by subtopics as needed to clarify differences between urban, suburban, and rural development. Note that all discretionary development is subject to CEQA review through which lead agencies would be required to identify feasible mitigation measures prior to approval.

4.4 Cumulative Impacts

State CEQA Guidelines (Section 15355) define cumulative impacts as "…two or more individual effects which, when considered together, are considerable or which compound or increase other environmental impacts." The combination of the Project with other foreseeable projects in the vicinity or region affected by the Project defines the cumulative scenario. Cumulative impacts and the Project's contribution to the cumulative impacts are addressed in Sections 3.1 through 3.14 of this EIR.

Table 4-1. More Likely Affected Resources from Induced Growth in Urban, Suburban, and Rural Areas

CEQA Topic	Urban	Suburban	Rural
Land Use		●	●
Aesthetics			
▪ Block scenic vista or damage scenic resource, introduce new sources of light and glare		●	●
▪ Degrade visual character	●	●	●
Transportation	●	●	●
Air Quality			
▪ Violate air quality standards, increase criteria pollutants	●	●	●
▪ Expose sensitive receptors to substantial pollutants	●		
Greenhouse Gas Emissions		●	●
Noise	●	●	●
Cultural Resources			
▪ Demolition of historic resources	●		
▪ Adverse change to archaeological resources or unique geologic feature		●	●
Biological Resources		●	●
Geology and Soils	●	●	●
Hydrology and Water Quality		●	●
Hazards and Hazardous Materials	●	●	●
Population and Housing	●	●	●
Public Services		●	●
Recreation	●	●	●
Utilities		●	●
Mineral Resources		●	●
Agriculture and Forest Resources			●

Notes:
● = more likely to result in impacts
No ● = less likely to result in impacts

These sections identify feasible mitigation measures to reduce the Project's cumulatively considerable contributions to significant cumulative impacts to less than cumulatively considerable. These sections also identify those cumulative impacts for which the Project's contribution would remain cumulatively considerable, even with implementation of feasible mitigation measures. Please refer to those sections of the Draft EIR for a discussion of cumulative impacts.

4.5 Urban Decay

Introduction

This section evaluates the potential for the Project to result in urban decay due to its retail operations. Under CEQA, "urban decay" is defined as physical deterioration of properties or structures that is so prevalent, substantial, and lasting that it impairs the proper utilization of the properties and structures and compromises the health, safety, and welfare of the surrounding community. Urban decay can occur if a project causes an adverse economic impact so severe that stores might close as a consequence and the resulting vacant buildings and/or properties, rather than being reused within a reasonable time, remain vacant once closed. Examples of physical deterioration include, but are not limited to, abandoned buildings and commercial sites, boarded doors and windows, long-term unauthorized use of properties and parking lots, extensive gang or offensive graffiti painted on buildings, dumping of refuse or overturned dumpsters on properties, dead trees or shrubbery, extensive litter, uncontrolled weed growth, and homeless encampments.

In *Bakersfield Citizens for Local Control v. City of Bakersfield* (2004), 124 Cal. App. 4th 1184 (Bakersfield Citizens), the Court of Appeal determined that State CEQA Guidelines Section 15064 requires urban decay research and analysis when the economic or social effects of a project cause a physical change. This change is to be regarded as a significant effect in the same manner as any other physical change resulting from a project.

The Project would convert 240 acres of City-owned property to a new use: a multi-phased, mixed-use development which would create an additional retail node for the area. The urban decay analysis considered a variant of the Project referred to as the Scheme B variant. As discussed in Chapter 2, *Project Description*, the Draft EIR analyzes two conceptual land use scenarios covering a variety of land uses, designated Scheme A and Scheme B. Each scheme has a variant in which Parcel 2, rather than including 1.96 million square feet of office and 200,000 square feet of retail, instead has no office space and 519,000 square feet of retail, replacing the multistory office space with retail in a "power center" format.[7] Because one of those scheme variants (designated here as the "Scheme B Variant") has the highest retail square footage and thus would have the greatest potential impact on existing retailers, that scheme is the subject of this urban decay analysis.

This EIR evaluates the potential for the proposed retail component of the Project to result in urban decay. This assessment for the potential for urban decay is based on the Urban Decay Analysis for the City Place Santa Project prepared by BAE Urban Economics. The full report is included as Appendix 4 of this EIR.

[7] *Retail Development*, published by the Urban Land Institute in 2008, states that a *power center* ("contains at least one super anchor store of at least 100,000 square feet of GLA [gross leasable area] such as a discount department store or a warehouse club and at least four category-specific anchors of 20,000 or more square feet." (See p. 12)

The non-retail elements are not considered likely to result in potential urban decay. As described above, there is a shortage of residential housing units compared to the employment levels in Santa Clara and this is also true in most of the San Francisco Peninsula. As a result, the addition of housing included with the Project would not result in the abandonment of housing elsewhere which might otherwise result in urban decay due to the strong and continued demand for housing in proximity to Silicon Valley. For the Project's office space element, one of the driving rationales for the Project is the strong demand for office space to support the continued strong economic growth in Silicon Valley, which has been one of the strongest areas of job growth in California and in the country for a prolonged period of time. While there have been periodic downturns, after each recovery, the region has continued to post employment gains and the current evidence supports a conclusion that there will continue to be demand for new office space. The rise in commercial rents is another strong supporting piece of evidence as well. Thus, the additional commercial space is not likely to result in the abandonment of other existing commercial space that might otherwise result in urban decay. The entertainment element of the Project could compete with other entertainment centers, particularly ones that might be nearby, such as the AMC Mercado Movie Theater on Mission College Blvd. (approximately 2 miles from City Place). However, with increased residents, employees and regional retail customers (who might not otherwise patronize entertainment venues locally) attracted by the Project, there will be an increased demand for entertainment venues rather than merely an increased supply of entertainment. Further, even if there were competition for moviegoers between City Place and other venues, movie theater complexes have a history of successful redevelopment to other commercial or other uses over time that can avert the potential for urban blight. Thus, it is considered unlikely that the addition of entertainment uses at the Project site would result in urban blight due to the permanent abandonment of other entertainment venues.

Methodology

The analysis of potential urban decay associated with implementation of the Project is based on an assessment of the market supply of, and demand for, retail space included in the Project. The analysis involved the following steps:

1. Define a market area for the Project, based on location of existing and planned competitive supply and anticipated shopping patterns of residents.
2. Document and analyze demographic and economic conditions for the market area, including benchmark comparisons to the State of California.
3. Document and analyze existing retail real estate trends, focusing on key competitive supply and existing vacancies. It should be noted in many cases shopping centers have life cycles, and may become functionally obsolete or deteriorate in the normal course of events as retail spending patterns change, with or without a significant new project.
4. Document and evaluate existing retail sales trends, in order to understand local market area characteristics and variations within the market area.
5. Estimate existing sales trends and "leakage" of consumer sales out of the market area or capture of consumer sales from outside the area, specifically for the retail categories potentially impacted by the Project.
6. Estimate impacts of the Project on market area sales, based on the assumed completion dates for the Scheme B Variant, with the first phase of the Project opening in 2019 and the final phase opening in 2029. The phasing assumptions were provided by the Project Developer.
7. Estimate the impacts of the Project on existing stores, based on any potential decline in sales for existing stores, as well as the effects of future growth and increased demand in the market area.
8. Assess the potential for urban decay.

Retail Market Area

The Project, as envisioned, would provide a large amount of destination retail and entertainment uses in a mix designed to attract shoppers from a broad region, not just local shoppers from the City of Santa Clara. To take into account this region-serving concept, the urban decay analysis mapped a 20-minute drive time[8] and designated a set of cities and surrounding areas that approximated this area as the Market Area. A list of the incorporated places within the Market Area is provided in Table 4-2. This area includes all the cities in Santa Clara County except Morgan Hill and Gilroy, as well as Fremont and Newark in Alameda County and Menlo Park and East Palo Alto in San Mateo County.

Table 4-2. List of Incorporated Places in Market Area

Name of City/Town	
Atherton	Milpitas
Campbell	Monte Sereno
Cupertino	Mountain View
East Palo Alto	Newark
Fremont	Palo Alto
Los Altos	San José
Los Altos Hills	Santa Clara
Lost Gatos	Saratoga
Menlo Park	Sunnyvale

Note: Market Area also includes additional unincorporated areas within and near this list of jurisdictions.
Source: BAE 2015.

Although it is believed that the majority of shoppers would originate from within the designated Market Area, additional visitors are likely to come from throughout the Bay Area and beyond, especially given regional attraction to Great America Amusement Park and events at Levi's Stadium and the Santa Clara Convention Center. The Project would also attract shoppers employed in the Project and elsewhere in the nearby Market Area that are in-commuting from elsewhere. Thus, the following demographic overview provides data for the City of Santa Clara, the Market Area, the larger nine-county Bay Area, as well as statewide data for comparison purposes.

Demographic and Economic Conditions for the Market Area

Evaluating population and household growth trends is critical in assessing the future performance of retail outlets in any market area. Areas with strong growth can easily absorb additional retail development since the increasing population generates additional demand for goods and services.

The populations of the City of Santa Clara, the defined Market Area, and the Bay Area are growing at a faster rate than California overall (Table 4-3). The fastest growth rate among the three geographies is taking place in the City of Santa Clara. Furthermore, not only have these geographies been growing in recent years, but ABAG projections show this growth will continue regionally over the Project development timeframe, which ends in 2029 (Table 4-4). ABAG projections show a population increase of 334,600 for the

[8] A twenty-minute drive time is commonly used in defining a regional retail center market area. See, for instance, *Retail Development*, Fourth Edition, Urban Land Institute, 2008, p.53.

Market Area between 2015 and 2030, and an increase of 1,035,400 during this same period for the nine-county Bay Area, with additional growth through 2040. This growth is anticipated to result in increased retail demand for the Market Area.

Table 4-3. Population Trends, 2010–2020

Area	2010	2015	Average Annual % Change 2010–2015	2020	Average Annual % Change 2015–2020
City of Santa Clara	116,468	124,932	1.4%	132,929	1.2%
Market Area[a]	2,003,578	2,129,666	1.2%	2,250,661	1.1%
Bay Area[b]	7,150,739	7,551,491	1.1%	7,948,058	1.0%
California	37,253,956	38,822,536	0.8%	40,505,730	0.9%

Notes:
a. The Market Area encompasses the entire population of the cities and towns of Atherton, Campbell, Cupertino, East Palo Alto, Fremont, Los Altos, Los Altos Hills, Los Gatos, Menlo Park, Milpitas, Monte Sereno, Mountain View, Newark, Palo Alto, San José, Santa Clara, Saratoga, Sunnyvale, and nearby unincorporated areas.
b. The Bay Area includes Alameda, Contra Costa, Marin, Napa, San Francisco, San Mateo, Santa Clara, Solano, and Sonoma Counties.
Sources: Nielsen; BAE 2015.

Table 4-4. Long-Term Population Projections

Population	2010	2015	2020	2030	2040	Average Annual % Change 2010–2040
City of Santa Clara	116,468	122,500	128,700	141,700	156,500	1.0%
Market Area[a]	1,924,935	2,028,200	2,136,100	2,362,800	2,616,200	1.0%
Bay Area	7,150,739	7,461,400	7,786,800	8,496,800	9,299,100	0.9%

Notes:
Estimates here are from a different source than previous table, and thus may vary from those estimates.
a. Population projections for the Market Area are based on 2013 ABAG estimates for subregional study areas, including Campbell, Cupertino, Fremont, Los Altos, Los Altos Hills, Los Gatos, Milpitas, Monte Sereno, Mountain View, Newark, Palo Alto, San José, Santa Clara, Saratoga, and Sunnyvale. These subregional study areas include many of the unincorporated areas near and within the Market Area boundaries.
Sources: ABAG 2013; BAE 2015.

Consumer buying power is another critical factor in assessing the potential for retail development. Household income provides a measure of the strength of this disposable income. The City and the Market Area have very high-income levels in comparison to the Bay Area, which in turn has higher income levels than the State (Table 4-5). The median household income for the Market Area in 2015 is estimated at $94,369, nearly 60 percent higher than California. While the relationship between income and local consumer expenditures is not necessarily linear, in part due to the prevalence of online

shopping trends in higher-income shoppers[9], these income levels are likely to drive higher consumer expenditures and lead to stronger local retail sales.

Table 4-5. Household Income

Area	Median Household Income
City of Santa Clara	$97,478
Market Area	$94,369
Bay Area	$78,822
California	$59,436
Sources: Nielsen; BAE 2015.	

Key Competitive Retail Nodes in the Market Area

The Market Area is home to a large number and variety of retail nodes. The largest regional mall within the area is Valley Fair, straddling the San José-Santa Clara city boundary at the opposite (south) end of the City from the Project. The Stanford Shopping Center in Palo Alto is more distant from the Project but offers a more upscale mix. Another key retail destination in the Market Area is Santana Row, a lifestyle center across Stevens Creek Boulevard from Valley Fair. Santana Row includes a mix of uses in an open-air format aligned on an internal street network, including ground floor retail, commercial, office, and residential uses, and would likely be a direct competitor for the Project.

Additionally, there are several other region-serving malls in the Market Area, including Westfield Oakridge in south San José, Vallco Shopping Mall in Cupertino, Eastridge Center in east San José, and Newpark Mall in Newark. The Vallco center, which has been in decline, was recently purchased by Sand Hill Properties, with plans for a major repositioning of the center as a mixed-use "town center."

The Project would also compete with the successful downtown retail districts in some of the cities in the Market Area, such as those found in Palo Alto and Los Gatos. The retail nodes discussed above should not be considered an exhaustive list of retail centers in the Market Area. There are a number of other centers that could compete with the Project, depending in large part on the retail mix of the Project as it responds to market conditions as they change over the development period.

Existing Retail Real Estate Market Conditions

Currently, the retail real estate market in the City of Santa Clara and the Market Area is considered strong, with low and decreasing vacancies, rising rents, and absorption of new and existing vacant space. The following should not be considered a complete inventory of the Market Area's retail space; however, it should provide an idea of the order of magnitude of the inventory and general market conditions. A summary of these current conditions can be found in Table 4-6. The following indicators

[9] For instance, higher-income shoppers are more likely than low-income shoppers to shop online rather than locally. See, for example, "Who is shopping online?" at http://www.iacquire.com/blog/study-online-shopping-behavior-in-the-digital-era, or "Online Shopping," by John Horrigan, February 13, 2008, Pew Research Center, at http://www.pewinternet.org/2008/02/13/part-3-low-income-internet-users-and-online-shopping/.

show the Market Area retail real estate market is strong and capable of absorbing new and existing vacant space:

- As of the end of third quarter of 2014, the retail vacancy rate is 4.4 percent for the portion of Santa Clara County within the Market Area, down from 5.3 percent in 2013 and 7.1 percent in 2010.
- Between the beginning of 2013 and the end of September 2014, the Market Area has absorbed over one million square feet of shopping center space, with new construction of approximately 570,000 square feet over the same period.

Table 4-6. Retail Overview, Santa Clara County, 2010-Q3 2014

	Santa Clara County[a]		Santa Clara City	
Summary, Q3 2014				
Inventory	33,519,764	sq. ft.	2,328,401	sq. ft.
Occupied Stock	32,030,019	sq. ft.	2,246,131	sq. ft.
Vacant Stock	1,489,745	sq. ft.	82,270	sq. ft.
Vacancy Rate	4.4%		3.5%	
Asking Rents[b]				
Avg Asking Rent, NNN (psf), 2013	$26.59		$27.12	
Avg Asking Rent, NNN (psf), Q3 2014	$28.15		$36.78	
% Change	5.9%		35.6%	
Net Absorption				
Net Absorption 2013	557,591	sq. ft.	(19,019)	sq. ft.
Net Absorption, YTD 2014[c]	536,021	sq. ft.	73,799	sq. ft.
New Activity[d]				
New Construction, 2013	312,979	sq. ft.	—	sq. ft.
New Construction, YTD 2014[c]	255,583	sq. ft.	—	sq. ft.

Notes:
a. Includes all of Santa Clara County except for Morgan Hill and Gilroy, which are outside of the Primary Market Area.
b. Average asking rents reflect NNN leases.
c. Year to date includes only first three quarters of 2014.
d. New construction activity based on properties tracked by Cassidy Turley.
Source: BAE 2015.

- Lease rates have been climbing, from a low of $25.28 per square foot triple net in 2011 to $28.15 in 2014, with the greatest rate of increase occurring in 2014.
- For the City of Santa Clara, the retail market is especially strong, with a third quarter 2014 vacancy rate of only 3.5 percent, and an average asking triple net rent of $36.78, an increase of over one-third over 2013.

Existing Retail Sales Trends

Inflation-adjusted taxable retail sales levels for California gradually increased from 2002 through 2005 as the State's economy gradually recovered from the dot-com bust and post 9/11 decline. California's

retail sales then began a decline that accelerated over time, with large drops from 2007 through 2009 as the Great Recession set in. Between 2003 and 2013, total taxable retail sales levels were lowest in 2009, dropping to three quarters of 2005 peak levels. Since 2009, sales have recovered somewhat but are still well below 2005 levels on an inflation-adjusted basis and even below the levels in 2000, despite the increase in population over the decade. For the third quarter of 2012 through the second quarter of 2013 period (most recent data available), California's total annual taxable retail sales were approximately $395 billion.

Taxable retail sales for the Bay Area track with those for the State, with a peak of $92.4 billion in 2006, one year later than the State's peak year. Subsequently, there was a sharp decline through 2009, followed by a gradual recovery that continued through 2013; inflation-adjusted sales finally surpassed 2002 levels, coming in at $85.4 billion.

The Market Area accounts for approximately one-quarter of all taxable retail sales in the Bay Area, a proportion that has remained nearly constant over the 2003 to 2013 period. Inflation-adjusted taxable sales trends in the Market Area mirror those for the Bay Area overall, although the peak year for sales was 2007, a year later than the Bay Area and two years later than California. As with those geographies, the low point was in 2009. Taxable retail sales for the 3rd Quarter 2012 through 2nd Quarter 2013 period were slightly above 2002 levels, at $22.7 billion, but still below the peak of $24.5 billion in 2007.

Leakage Analysis

In retail, leakage refers to members of a community spending money outside that community or when money spent inside that community is transferred outside the community. In order to quantify this, retail leakage analysis compares actual retail sales in an area with a selected benchmark that provides a measure of the potential sales generated by that area's residents. This benchmark is estimated according to a number of factors; however, the two most important factors are the number of persons in the area and the disposable income available to that population. Additional factors influencing retail spending in an area include household type, age of population, number of workers in the area (i.e., daytime population), tourism expenditures, tenure patterns (owner vs. renter), and cultural factors.

If sales levels are below the predicted benchmark, that is a strong indicator that consumers are traveling outside the area to shop; that is, that the sales are "leaking" out of the study area. This means the area may be able to support increased sales, either by opening of new outlets targeting those leakages or a repositioning of existing outlets such that they could capture that leakage.

For the purposes of this analysis, Santa Clara County per capita expenditures by major retail store category are used as benchmarks in assessing whether the Market Area has injections or leakages of retail sales. The Market Area's median household income levels are very similar to Santa Clara County levels, and Santa Clara County is a large enough geography that sales are likely relatively self-contained; moreover, most of the Market Area falls within the County. These figures have been adjusted to take into account non-taxable sales. The results of the leakage analysis are summarized in Table 4-7 with detail on this analysis provided in Appendix 4.

The Market Area appears to show leakages of retail sales in all major retail categories except for the motor vehicle sector. Three categories show leakages of greater than 10 percent: home furnishings and appliance stores; clothing and clothing accessory stores; and the "other retail group", which includes a mix of retail store types not otherwise categorized. This leakage may indicate that some Market Area resident purchases are being made elsewhere; for instance, residents may be shopping elsewhere in the

three counties that include the Market Area, or may be venturing to San Francisco's wide array of higher-end retail outlets.

Project-Level Urban Decay Impacts

Analysis of the Project's potential impacts with respect to urban decay was completed at five points in time corresponding to the assumed construction completion date for each of the phases that includes retail: Phase 1 in 2019, Phase 2 in 2020, Phase 3 in 2021, Phase 4 in 2023, and finally, Phase 7 in 2029.

Table 4-7. Summary of Leakage Analysis

Store Category	Estimated Sales in Area	Estimated Residential Expenditures	2015 Total Injection/ (Leakage)	2015 Per Capita Injection/ (Leakage)	Injection/ (Leakage) as % of Potential Sales
Motor Vehicle and Parts Dealers	$7,190,365	$6,978,669	$211,696	$99	3%
Home Furnishings and Appliance Stores	$2,111,790	$2,362,199	($250,409)	($118)	-11%
Bldg. Matrl. and Garden Equip. & Supplies	$1,694,522	$1,740,698	($46,176)	($22)	-3%
Food and Beverage Stores	$3,844,329	$3,848,745	($4,415)	($2)	0%
Gasoline Stations	$2,955,576	$3,108,734	($153,158)	($72)	-5%
Clothing & Clothing Accessories Stores	$2,118,990	$2,665,221	($546,231)	($256)	-20%
General Merchandise Stores	$3,325,933	$3,560,081	($234,148)	($110)	-7%
Food Services and Drinking Places	$4,444,965	$4,581,134	($136,169)	($64)	-3%
Other Retail Group	$3,465,241	$3,894,629	($429,388)	($202)	-11%
Total	$31,151,711	$32,740,109	($1,588,398)	($746)	-5%

Note: All sales and leakages estimates are in 2013 dollars. For detail on methodology and sources, see Appendices to Urban Decay report.

Sources: BAE, based on sources as noted in supporting tables and appendices.

The Project is assumed to capture some sales from leakages to retail outlets outside of the Market Area, and from persons not residing in the Market Area. However, most of its sales would have otherwise gone to existing competitive retail nodes in the Market Area. Estimates of capture from these retail nodes indicate that due to continued increases in population, sales at existing retail nodes would be above 2015 baseline levels as early as 2019, even with the Project phases opening according the currently forecast schedule. By 2029, with the retail phases of the Project complete and operating at stabilized levels, sales in existing retail outlets in the Market Area would be $2.5 billion, or 12 percent, above baseline 2015 levels. Therefore, even with the Project in place, overall retail spending in existing outlets would be higher than current levels.

Although the Market Area shows small or modest leakages of retail sales across multiple retail categories, because the Market Area is not physically separated from other population centers up the Peninsula and in Alameda County, some residents in the farther reaches of the Market Area are likely to continue shopping elsewhere. It is unrealistic to expect that the City Center would attract a large proportion of the leakages.

Additional shoppers may be attracted from outside this defined Market Area because of the Project's location near the new Levi's Stadium, the Great America Amusement Park, and the Santa Clara Convention Center. However, beginning with Phase 2, capture from shoppers outside the Market Area is set at only 0.05 percent of their expenditures, totaling $38.6 million in 2019. This estimate is based in part on a review of a study of the economic impacts of the stadium conducted as part of the planning process in 2007, which estimated off-site food, entertainment, and retail expenditures of approximately $27 million by attendees of football games and other events at the stadium.

Due to the strength of retail real estate market conditions, as indicated by low and decreasing vacancies and rising rents, property owners are likely to keep any vacant space created by store closures in good order through the recovery period and re-tenant space within a reasonable amount of time or redevelop space in a newer retail format or other uses such as housing. This would ensure that property owners maintain their properties and do not allow them to fall into disrepair.

In conclusion, because of the combination of the potential for the Project to recapture local consumer expenditures leaking from the Market Area, the limited capture of sales from outside the Market Area, and, most profoundly, the overall increase in retail demand in the Market Area as the population increases, the Project is unlikely to contribute to urban decay in the Market Area, and urban decay impacts related to the Project would be less than significant.

Cumulative Urban Decay Impacts

Within the Market Area, but excluding the Project, approximately 5.4 million square feet of reasonably foreseeable non-automotive retail space is in the pipeline (listed in Appendix 4). The planned and proposed retail development includes a broad mix of project types, ranging from small grocery store additions to additional mall anchor spaces. Only some of this space would directly compete with the Project, but all of it would represent additions to the regional retail inventory. It is conservatively assumed that these projects would all be completed prior to the opening of the first phase of City Place in 2019, in which case the Market Area would have to absorb this additional square footage as well as the Project by that time.

Assuming that all reasonably foreseeable planned and proposed competitive retail space is developed, the Project would capture an estimated 5.3 percent of baseline retail sales in the Market Area in 2019; this would increase slightly to 6.2 percent in 2020, as the substantial square footage of Phase 2 in the City Center is completed, followed by a gradual decrease to 5.5 percent in 2021 and 3.4 percent in 2023

as the population of the Market Area continues to grow. By 2029 and beyond, the assumed first year of operation of the final retail phase of the Project, demand would be such that sales at existing outlets would be slightly above estimated 2015 baseline levels. At that time, estimated sales in the Project would be equivalent to approximately four percent of the 2029 sales in the baseline projects. This indicates that the potential for long-term declines in sales in existing retail outlets overall is limited. Overall, increasing retail demand in the Market Area and nearby areas is large enough over the long term to absorb reasonably foreseeable, planned, and proposed projects without significant impacts. Furthermore, both the Project and the other planned projects may delay construction or cut back on the amount of retail space if market conditions indicate an oversupply of space.

In the event closures due to short-term (or long-term) declines do happen, there are often retailers and other second generation tenants such as fitness centers trying to enter the market; these prospective tenants see vacant spaces, even large ones, as an opportunity. This is especially true if leakage analysis indicates there may be gaps in the retail mix. As long as there are opportunities for reuse of properties through re-tenanting of spaces or redevelopment in other uses, property owners are likely to continue to maintain vacated buildings to keep them available in the market, or otherwise redevelop the properties (in either retail or other uses) to meet changing market conditions, and the area will avoid significant urban decay.

Based upon these findings, the development of the Project would not contribute to urban decay in the Market Area, and urban decay impacts related to the Project and cumulative market development would be less than significant

.

This Page Intentionally Left Blank

Chapter 5
Alternatives Analysis

5.1 Introduction

The California Environmental Quality Act (CEQA) (Public Resources Code [PRC], Section 21000 et seq.) and the State CEQA Guidelines (California Code of Regulations, Title 14, Section 15000 et seq.) require that an Environmental Impact Report (EIR) "describe a range of reasonable alternatives to the project, or to the location of the project, which would feasibly attain most of the basic objectives of the project but would avoid or substantially lessen any of the significant effects of the project, and evaluate the comparative merits of the alternatives" (State CEQA Guidelines Section 15126.6(a)). If mitigation measures or a feasible project alternative that would meet most of the basic project objectives would substantially lessen the significant environmental effects of a proposed project, then the lead agency should not approve the proposed project unless it determines that specific technological, economic, social, or other considerations make the mitigation measures and the project alternative infeasible (PRC Section 21002, State CEQA Guidelines Section 15091(a)(3)). The EIR must also identify alternatives that were considered by the lead agency but were rejected as infeasible during the scoping process and should briefly explain the reasons underlying the lead agency's determination (State CEQA Guidelines Section 15126.6(c)). Therefore, pursuant to the State CEQA Guidelines, this section briefly explains the reasons why certain identified alternatives were rejected as infeasible.

One of the alternatives that must be analyzed is the "No Project" Alternative. The No Project analysis must discuss the existing conditions at the time the Notice of Preparation (NOP) is published, as well as what would be reasonably expected to occur in the foreseeable future if the project were not approved and development continued to occur in accordance with existing plans and consistent with available infrastructure and community services (State CEQA Guidelines Section 15126.6(e)(2)). Therefore, pursuant to the State CEQA Guidelines, this section discusses and analyzes two No Project Alternatives.

In addition to two No Project Alternatives, this section describes additional alternatives (Reduced Intensity Alternative and Increased Housing Alternative) to the City Place Santa Clara Project (Project) and analyzes the impacts of each. This section compares the significant impacts of the alternatives to the significant environmental impacts of the Project as proposed.

5.2 Project Objectives and Environmental Impacts

As discussed in Chapter 2, *Project Description*, the City of Santa Clara (City) and The Related Companies (Related, or Project Developer) have identified the following Project objectives that are relevant to the physical impacts considered in this Draft EIR.

- Convert the existing uses at the former Santa Clara All-Purpose Landfill (Landfill) to more productive uses.
- Establish a new and vibrant mixed-use City neighborhood with a well-defined center to serve as a focal point for a pedestrian-friendly "live, work, and play" environment.

- Promote transit-oriented infill development by placing job-creating commercial buildings; residential units; and entertainment, dining, and shopping options in close proximity to each other and to existing transit and other multimodal transportation facilities.
- Enhance entertainment, dining, and shopping opportunities for local and regional residents and workers.
- Provide additional opportunities for major employers to locate to the City through the creation of attractive office park complexes in proximity to new residential units and entertainment, dining, and shopping options.
- Provide additional visitor-serving facilities such as hotels, restaurants, and shops for people using the new football stadium, as well as the convention center and theme park.
- Provide opportunities for supplemental parking for stadium events (including parking on football game days), while making adequate provision to maintain the vitality of the retail uses within the Project.
- Provide enhanced hotel availability to an underserved travel market.
- Allow flexibility to respond to changing market demands to ensure that the Project remains economically feasible throughout a multi-year development process.
- Provide new public open spaces and other community benefits.
- Modernize the Landfill protection systems operated by the City to ensure continued protection of human health and the environment.
- Facilitate creation of both permanent jobs and construction-related jobs.
- Create a significant new tax base and increase City revenues.

As stated above, the alternatives to a proposed project are meant to feasibly attain most of the basic project objectives while avoiding or substantially lessening its significant impacts. Significant and unavoidable Project-specific and cumulative impacts from the Project are listed below.

Significant and Unavoidable Project-Level Impacts

- **Conflicts with Adopted City Land Use Plans and Policies with Regard to the Jobs/Housing Balance.** The Project would be inconsistent with the City's General Plan policies aimed at improving the City's jobs/housing balance which would result in secondary significant unavoidable impacts on traffic, air quality, and GHG emissions. (LU-1)
- **Impact LU-2: Conflicts with Airport Land Use Plan and City Policies Related to Airport Noise.** The Project would be inconsistent with the Comprehensive Land Use Plan for the San José International Airport in relation to noise policies and the City's General Plan related to Airport Noise. (LU-2, and as disclosed under Impact NOI-5)
- **Signalized (Off-Site) Intersections.** The Project would add traffic to certain signalized intersections, causing them to operate at unacceptable levels of service or worsen unacceptable levels of service under existing with-Project or background with-Project conditions. (TRA-1)
- **Unsignalized (Off-Site) Intersections.** The Project would add a considerable amount of traffic to certain unsignalized intersections that would operate unacceptably under background with-Project conditions. (TRA-2)

- **Freeway Segments.** The Project would add traffic to certain freeway segments, causing them to operate at unacceptable levels of service or worsen existing unacceptable levels of service. (TRA-3)
- **Signalized (Off-Site) Intersections with Phases 1, 2 and 3.** Phases 1, 2, and 3 of the Project would add traffic to certain signalized intersections, causing them to operate at unacceptable levels of service or worsen unacceptable levels of service under existing conditions. (TRA-1a)
- **Freeway Segments.** Phases 1, 2, and 3 of the Project on Parcels 4 and 5 would add traffic to certain freeway segments, causing them to operate at unacceptable levels of service or worsen existing unacceptable levels of service. (TRA-3a)
- **Intersections with Access Variant Scheme.** With the access variant, the Project would add traffic to certain nearby intersections, causing them to operate at unacceptable levels of service or worsen existing unacceptable levels of service. (TRA-6)
- **Pedestrian Facilities.** The Project would generate substantial numbers of pedestrians traveling to transit stops along routes where sidewalk gaps exist, thus creating a hazardous condition for pedestrians. (TRA-7)
- **Transit Operations.** The Project would generate considerable amounts of traffic congestion at intersections on bus and light-rail routes in the study area, thereby increasing the travel times of buses and light-rail vehicles. (TRA-11)
- **Construction Traffic.** Construction traffic would result in short-term increases in traffic volumes that would cause significant impacts on intersection and freeway segment levels of service and temporary road closures requiring detours for vehicles accessing the Great America ACE/Capitol Corridor Station. (TRA-18)
- **Intersections with Special Event Traffic.** Project traffic would exacerbate unacceptable levels of service at intersections near the site and Levi's Stadium during special events. (TRA-19)
- **Conflict with Air Quality Plan.** The Project would conflict with or obstruct implementation of the applicable air quality plan. (AQ-1)
- **Operational Criteria Air Pollutant Emissions.** The Project would result in the generation of regional criteria pollutant emissions during operation in excess of BAAQMD thresholds. (AQ-3)
- **Generation of Regional Criteria Pollutant Emissions during Combined Project Construction and Operation.** The Project would generate regional criteria pollutant emissions during combined Project construction and operation in excess of BAAQMD thresholds. (AQ-4)
- **Exposure to Excessive Noise Levels.** The Project would expose persons to or generate noise levels in excess of standards established in a local general plan or noise ordinance or applicable standards of other agencies. (NOI-1)
- **Permanent Increase in Ambient Noise Level.** The Project would result in a substantial permanent increase in ambient noise levels in the Project vicinity above levels existing without the Project. (NOI-3)
- **Exposure of People to Noise from Airports.** The Project would be located within an airport land use plan area or, where such a plan has not been adopted, within 2 miles of a public airport or public use airport and would expose people residing or working in the Project area to excessive noise levels. (NOI-5)

- **Interference with Movement of Native Migratory Wildlife Species.** The Project would result in harm to or mortality of migratory birds or their active nests. (BIO-1)

Significant and Unavoidable Cumulative Impacts

- **Cumulative Land Use Impacts.** The Project, in combination with other foreseeable development in the nine-county ABAG region, would be inconsistent with some applicable land use plans, policies, and regulations, including those policies aimed at improving the City's jobs/housing balance. (C-LU-1)
- **Signalized (Off-Site) Intersections in Cumulative with-Project Conditions.** Increases in traffic associated with the Project under cumulative with-Project conditions would result in considerable contributions at signalized intersections operating at unacceptable levels of service during both peak hours. (TRA-14)
- **Cumulative with-Project Access Variant Intersections.** Increases in traffic associated with the Project under cumulative with-Project conditions would result in considerable contributions at intersections operating at unacceptable levels of service during both peak hours with the Project Variant Access Scheme. (TRA-16)
- **Impacts on Freeway Segments under Cumulative with-Project Conditions.** Increases in traffic associated with the Project under the cumulative with-Project conditions would result in considerable contributions to numerous freeway segments with cumulative impacts. (TRA-17)
- **Cumulative Criteria Pollutants.** The Project would result in a cumulatively considerable net increase in criteria pollutants for which the Project region is a nonattainment area for an applicable federal or State ambient air quality standard. (C-AQ-1)
- **Cumulative Health Risks.** The Project's TAC emissions could contribute to cumulative exposure health risks of sensitive receptors. The Project would also locate new receptors where they would be exposed to cumulative health risks due to cumulative TAC emissions. (C-AQ-2)
- **Greenhouse Gas Emissions.** The Project would generate GHG emissions, either directly or indirectly, that would have a significant impact on the environment. (GHG-1)
- **Conflicts with Applicable Plans and Policies.** The Project would conflict with an applicable plan, policy, or regulation adopted for the purpose of reducing the emissions of GHGs. (GHG-2)
- **Cumulative Exposure to Excessive Noise.** The Project would expose persons to or generate noise levels, in combination with cumulative development, in excess of standards established in a local general plan or noise ordinance or applicable standards of other agencies. (C-NOI-1)
- **Cumulative Utilities Impacts.** The Project, in combination with other foreseeable development in the vicinity, would not require or result in the construction of new wastewater or stormwater treatment facilities or the expansion of existing treatment facilities; result in a determination of inadequate capacity to serve the expected demand and existing entitlements; or result in wasteful, inefficient, or unnecessary energy use. However, the Project would be served by a landfill with insufficient permitted capacity to accommodate solid waste disposal needs. The Project would also contribute to cumulative energy demands that may result in significant and unavoidable secondary environmental impacts related to long-term energy generation and transmission. (C-UT-2)

5.3 Description of Alternatives Considered

Based on the goal of reducing the significant and unavoidable impacts, as listed above, four Project alternatives have been developed for evaluation in the Draft EIR: two No Project Alternatives, a Reduced Intensity Alternative, and an Increased Housing Alternative. Table 5-1 provides a summary of key features of the Project and each alternative. Further details regarding each alternative are provided below.

Table 5-1. Comparative Description of the Project Alternatives – Net Increase

	Project	No Project Alternative 1	No Project Alternative 2	Reduced Intensity Alternative	Increased Housing Alternative
Total Square Feet (gross square feet)	9,164,400	--	825,000	6,458,000	9,164,400
Max Building Heights[a]	17 stories	--	17 stories	17 stories	17 stories
Total Residents	3,270/480[b]	--	0	3,270	4,030
Total Net New Employees	24,760/28,720[b]	0	2,230	14,730	23,610
Daily Trips	123,040/140,730[b]	0	14,360	94,210	120,690

Source: Related 2015; Fehr & Peers 2015

Notes:

a. The maximum building height would not to exceed 190 feet above finished grade. The maximum potential elevation of proposed construction would be about 219 feet above msl.

b. Scheme A/Scheme B.

No Project Alternative 1

Under No Project Alternative 1, the existing conditions at the Project site would not change. Parcels 1–4 are currently occupied by the Santa Clara Golf & Tennis Club, a restaurant and banquet facility, Fire Station 10, a Bicycle-Motocross (BMX) track, the Ameresco Methane Plant, the Retention Basin, and a City vehicle washing station. The on-site features and buildings associated with the existing uses on Parcels 1–4 would remain. In addition, the existing surface parking lot at Parcel 5 would continue to operate as under existing conditions. The three existing off-site office buildings in Tasman East also would remain and not be demolished to accommodate the Lick Mill Boulevard extension proposed under the Project. Approximately 510 employees would continue to be employed under the existing uses on Parcels 1–4 and at the three off-site office buildings in Tasman East. No construction or demolition would occur on Parcels 1–5 or off-site under No Project Alternative 1.

No Project Alternative 2

As discussed above, No Project Alternative 2 is based on what would be reasonably expected to occur in the foreseeable future if the Project were not approved and development continued to occur in accordance with the City's General Plan and consistent with available infrastructure and community services. Under No Project Alternative 2, Parcels 1–4 would remain as-is since the existing conditions are projected to continue under all phases of the City's General Plan. Parcels 1–4 are currently occupied by the Santa Clara Golf & Tennis Club, a restaurant and banquet facility, Fire Station 10, a BMX track, the Ameresco Methane Plant, the Retention Basin, and a City vehicle washing station. The on-site features

and buildings associated with the existing uses on Parcels 1–4 would remain. The three existing off-site office buildings in Tasman East also would remain and not be demolished to accommodate the Lick Mill Boulevard extension proposed under the Project. Approximately 510 employees would continue to be employed under the existing uses on Parcels 1–4 and at the three off-site office buildings in Tasman East. No construction or demolition would occur on Parcels 1–4 or off-site under No Project Alternative 2.

Although Parcel 5 is currently vacant and is used for surface parking, Parcel 5 is designated for Regional Commercial land uses for Phase I (2010-2015), Phase II (2015-2025), and Phase III (2025-2035) of development in the City's General Plan. Thus, under No Project Alternative 2, Parcel 5 could be developed with Regional Commercial[1] uses that serve both City residents and the surrounding region. As with the Project and another previously proposed project at Parcel 5,[2] it is assumed that No Project Alternative 2 at Parcel 5 could be developed with up to 825,000 gross square feet (gsf)[3] of commercial uses. However, consistent with the Regional Commercial land use designation, No Project Alternative 2 would only include hotel, retail, and office uses; no residential uses would be constructed at Parcel 5.[4] Approximately 2,230 employees would be associated with the build-out of Parcel 5 under No Project Alternative 2. No Project Alternative 2 would result in a decrease in daily trips compared to the Project, which would equate to approximately 14,360 daily trips (an 89.3 percent reduction as compared to the Project). City Council review and approval would be required to rezone Parcel 5 with the appropriate zoning classifications consistent with the General Plan designation. In addition, No Project Alternative 2 would require a General Plan Amendment for increased floor area ratio (FAR).

Roadway extensions would not be constructed at off-site locations (Tasman East, the Convention Center, and over the San Tomas Aquino Creek) under No Project Alternative 2. Additionally, a replacement Fire Station 10 would not need to be constructed under this alternative. Construction associated with commercial development would occur on Parcel 5 only. Table 5-2 summarizes the proposed development under No Project Alternative 2.

---

[1] Retail uses allowed under the Regional Commercial land use designation include: regional shopping centers, local-serving offices, medical facilities, home improvement/durable goods sales and services, warehouse membership clubs, new and used auto sales and services, and travel-related services such as hotels, gas stations, restaurants, convention centers, amusement parks and sports venues.

[2] A Notice of Preparation (NOP) was released for the Centennial Gateway Mixed-Use Project on July 10, 2014. The project proposed to construct between 600,000 to 825,000 sf of mixed-use development at Parcel 5.

[3] Assuming maximum development of Parcel 5 at the maximum permitted floor area ratio (FAR) for the Regional Commercial land use, the General Plan would allow for approximately 209,100 gsf [maximum FAR * 348,480 sf (total area of Parcel 5)] of development at Parcel 5. However, a development of this size on Parcel 5 would not be financially viable. Therefore, No Project Alternative 2 analyzes a larger development scenario, based on feasible projects previously proposed at Parcel 5. No Project Alternative 2 analyzes a conservative scenario of the maximum building area that would be reasonably expected to occur in the foreseeable future. The General Plan would allow for 75 percent less building area than what is analyzed for No Project Alternative 2. Therefore, if the General Plan amendment would not be approved, then the impacts analyzed in this section would be approximately 75 percent less than those disclosed herein.

[4] Note that the Project includes approximately 200 residential units on Parcel 5. However, residential uses are not permitted in areas under the Regional Commercial land use designation. Therefore, residential units are not included at Parcel 5 under No Project Alternative 2; the area would instead be dedicated to commercial uses.

Table 5-2. No Project Alternative 2—Development Summary by Parcel

Parcel	Use	Proposed New Development (gsf)
Parcel 1	BMX Track	—
Parcel 2	Golf Course	—
Parcel 3	Golf Course	—
Parcel 4	Golf Course/Tennis/Fire Station 10	—
Parcel 5	Commercial[a]	825,000
Total Development		825,000

Source: Related 2015.
Notes:
[a.] Commercial uses include office, retail, and hotel.

Reduced Intensity Alternative

The Reduced Intensity Alternative has been developed to lessen impacts associated with transportation/traffic, air quality, GHG and noise. Office users are primarily responsible for generating these impacts; therefore, decreasing the amount of office space, as proposed in the Reduced Intensity Alternative, would reduce these impacts. The Reduced Intensity Alternative would include a 30 percent reduction in the amount of floor area compared to the Project. This 30 percent reduction would involve substantially reducing the amount of office uses at all parcels except for the City Center Zone. Therefore, the Reduced Intensity Alternative would result in approximately 3.02 million gsf of office area, compared to 5.72 million gsf under the Project, Scheme A. All other land uses would have the same amount of area as proposed under Scheme A.

As summarized in Table 5-3, the Reduced Intensity Alternative would total approximately 6,458,000 gsf of building area. Since the Reduced Intensity Alternative would result in the same amount of residential uses as Scheme A, approximately 3,270 new residents would live on-site at Parcels 4 and 5. However, since fewer office employees would work at the Project site (11,160 office employees compared to 21,200 office employees under Scheme A), the alternative would result in approximately 15,220 employees. Accounting for the existing employees that would be displaced by the construction of the alternative, in total, the Reduced Intensity Alternative would result in a net increase of approximately 14,730 employees. The Reduced Intensity Alternative would result in a decrease in daily trips compared to the Project, which would equate to approximately 94,210 daily trips (a 33 percent reduction as compared to the Project).

As shown in Figure 5-1, the illustrative site plan for the Reduced Intensity Alternative is similar to that of the Project, except that the Reduced Intensity Alternative would include surface parking in the office areas rather than structured parking, as proposed under the Project. This would result in a proportionate decrease in the building footprint compared to the Project. However, as a conservative analysis, it is assumed that all footprint-based impacts that would be related not to population but to ground disturbance (such as impacts on cultural resources, biological resources, geology and soils, and hydrology and water quality) would be identical to those of the Project. Buildings that would be constructed under the Reduced Intensity Alternative would most likely be shorter than buildings that would be constructed under the Project because of the reduced development square footage associated with this alternative; however, buildings under this alternative could still be constructed to a maximum

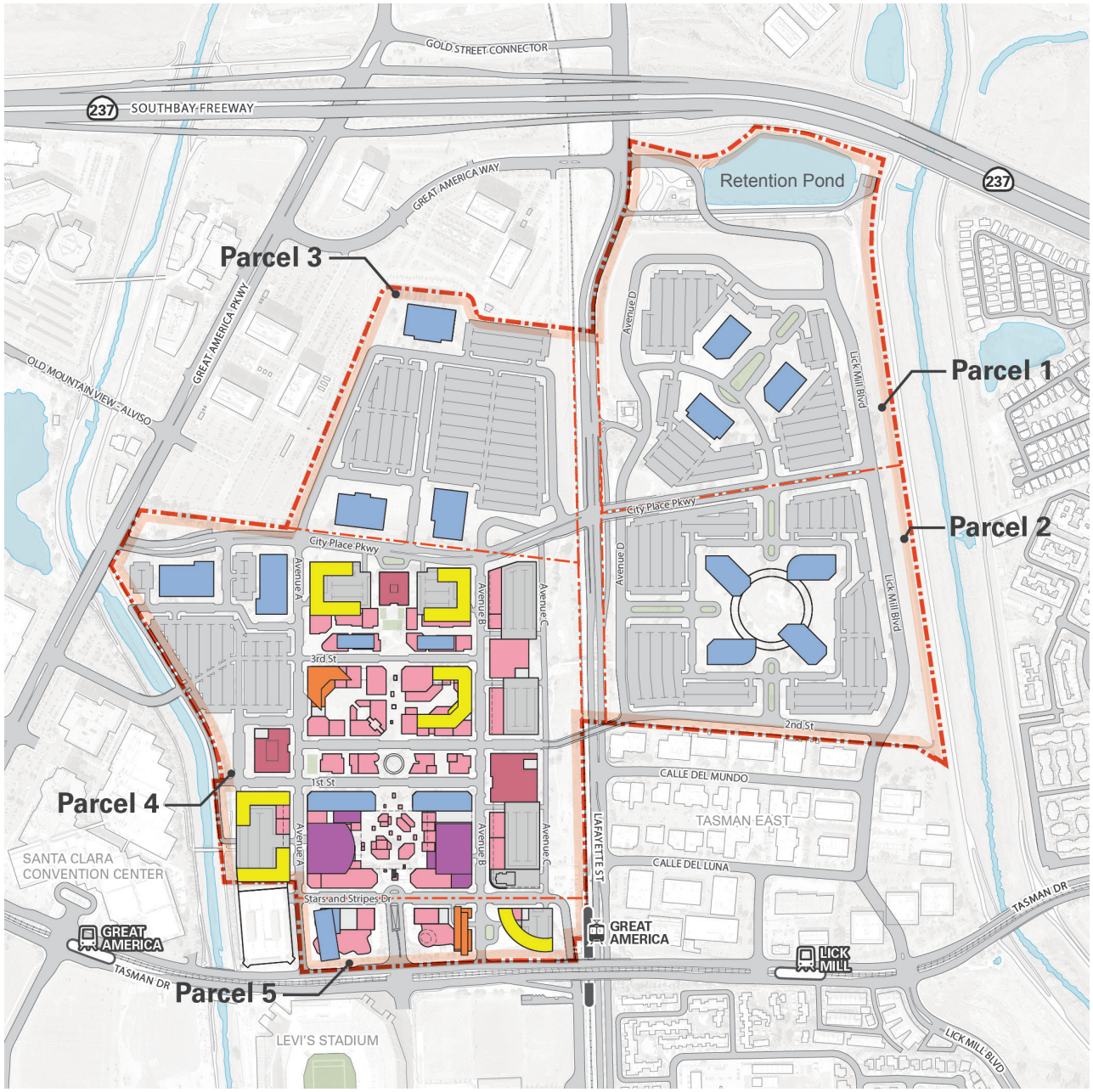

LEGEND

Land Uses

- Podium Residential
- Retail Anchor
- Retail and F & B
- Hotel
- Entertainment
- Office

Boundaries

- Site
- Parcel

0 400 800 1,600 Feet

N

Source: RTKL, 2015.

Graphics ... 00333.14 (6-10-2015) tm

ICF INTERNATIONAL

Figure 5-1
Reduced Intensity Alternative
City Place Santa Clara

This Page Intentionally Left Blank

height of 17 stories (not to exceed 190 feet above finished grade[5]). The Reduced Intensity Alternative could result in reduced infrastructure construction compared to the Project due to the 30 percent reduction in the amount of floor area constructed. However, as explained below, of potential alternative development scenarios involving greater reductions of intensity, most of the special infrastructure construction necessary on this particular site must be constructed even with a reduced amount of floor area. Therefore, as a conservative analysis, it is assumed that this alternative would include the same off-site infrastructure improvements, vehicular access, and bicycle/pedestrian circulation improvements that the Project would include. Similar landscaping and open space amenities would be installed. In addition, Fire Station 10 could be reconstructed within the Project site or at an off-site location at the Santa Clara Convention Center parking lot.

Table 5-3. Reduced Intensity Alternative—Development Summary by Parcel

Parcel	Use	Gross Square Feet (gsf)	Percent Reduction (Compared to Project – Scheme A)
Parcel 1	Office[a]	480,000	60%
Parcel 2	Office[a]	720,000	67%
Parcel 3	Office[a]	520,000	28%
Parcel 4	Residential	1,160,000	0%
	Hotel	298,000	0%
	Retail[b]	1,415,000	0%
	Office[a] – City Center	320,000	0%
	Office[a] – North West	720,000	32%
Parcel 5	Residential	200,000	0%
	Hotel	280,000	0%
	Retail	87,000	0%
	Office[a]	258,000	0%
Total Development		6,458,000	30%

Source: Related 2015.

Notes:

[a.] Small amounts of employee-servicing food/beverage and other retail uses may be provided in each building.

[b.] Retail includes food/beverage and entertainment uses.

Increased Housing Alternative

The Increased Housing Alternative has been developed to improve the jobs-to-housing ratio, which would result in fewer impacts associated with transportation/traffic, air quality, and GHGs. Under the Increased Housing Alternative, the 320,000 gsf of office space planned under the Project for the Parcel 4 portion of the City Center under Scheme A would be replaced with 320,000 gsf of residential space. Therefore, this alternative would result in 320 additional residential units, for a total of approximately 1,680 residential units at the Project site. The Increased Housing Alternative would include the same amount of retail, hotel, and entertainment uses as the Project, Scheme A.

[5] The maximum potential elevation of proposed construction would be about 219 feet above msl.

As summarized in Table 5-4, the Increased Housing Alternative would develop the same amount of area as the Project (9,164,400 gsf of building area). However, because of the increase in residential units and reduction of office space compared to the Project, this alternative would result in approximately 4,030 new residents and 24,100 new employees. Accounting for the existing employees that would be displaced by the alternative, in total the Increased Housing Alternative would result in a net increase of approximately 23,610 employees. The Increased Housing Alternative would result in an equivalent decrease in daily trips compared to the Project, which would equate to approximately 120,690 daily trips (a 14.2 percent reduction as compared to the Project).

Table 5-4. Increased Housing Alternative—Development Summary by Parcel

Parcel	Use	Gross Square Feet (gsf)
Parcel 1	Office[a]	1,200,000
Parcel 2	Office[a]	2,160,000
Parcel 3	Office[a]	720,000
Parcel 4	Residential	1,480,000
	Hotel	298,000
	Retail[b]	1,415,000
	Office[a]	1,066,400
Parcel 5	Residential	200,000
	Hotel	280,000
	Retail	87,000
	Office[a]	258,000
Total Development		9,164,400

Source: Related 2015.
Notes:
a. Small amounts of employee-servicing food/beverage and other retail uses may be provided in each building.
b. Retail includes food/beverage and entertainment uses.

It is assumed that the building footprint of the Increased Housing Alternative would be identical to the Project, with the footprint planned for office space in the City Center portion of Parcel 4 converted instead to residential. Thus, all footprint-based impacts would be identical to the Project. Buildings under the Increased Housing Alternative would be constructed no higher than 17 stories (not to exceed 190 feet above finished grade[6]), the same maximum height as proposed under the Project. The Increased Housing Alternative would also include the same off-site infrastructure improvements, vehicular access, and bicycle/pedestrian circulation improvements as the Project. Similar landscaping and open space amenities would be installed. In addition, Fire Station 10 could be reconstructed on the Project site or at an off-site location at the Santa Clara Convention Center parking lot.

[6] The maximum potential elevation of proposed construction would be about 219 feet above msl.

5.4 Attainment of Project Objectives

An evaluation of how each alternative meets or does not meet the basic Project objectives is provided below. Pursuant to State CEQA Guidelines Section 15126.6(a), this analysis compares the alternatives to the objectives of the Project. As described in detail above, there are four alternatives for the Project: No Project Alternative 1, No Project Alternative 2, Reduced Intensity Alternative, and Increased Housing Alternative. The following analysis describes the extent to which these alternatives meet or do not meet the City and Project Developer's objectives as described in Chapter 2, *Project Description*, and discussed above.

No Project Alternative 1

No Project Alternative 1 would not meet the primary objectives of converting the existing uses at the former Santa Clara Landfill to more productive uses or modernizing the existing Landfill protection systems. Instead, Parcels 1–4 would still be occupied by the Santa Clara Golf & Tennis Club, a restaurant and banquet facility, Fire Station 10, a BMX track, the Ameresco Methane Plant, the Retention Basin, and a City vehicle washing station. In addition, Parcel 5 would remain as a surface parking lot. Because none of the proposed buildings would be constructed, No Project Alternative 1 would not achieve economies of scale and would not be able to meet the Project's basic objective of creating a vibrant mixed-use "live, work, play environment." The Project objective of providing commercial, residential, and entertainment uses for local and regional residents and promoting transit-oriented infill development would not be met. There would be no new public open spaces or other community benefits created under No Project Alternative 1; however, existing open spaces and community uses at the Project site would be maintained. Additionally, the primary objectives of providing additional visitor-serving facilities, augmenting hotel availability, and providing additional opportunities for major employers would not be met. This alternative would not provide development to respond to changing market demands and, therefore, would not meet the Project objective of ensuring that development remains economically feasible throughout a multi-year process. Because no development would occur, No Project Alternative 1 would not create permanent or construction-related jobs compared to the Project. As such, No Project Alternative 1 would not meet the basic Project objectives.

No Project Alternative 2

No Project Alternative 2 would not meet the primary objectives of converting the existing uses at the former Landfill to more productive uses and modernizing the existing Landfill protection systems. Instead, Parcels 1–4 would continue under current conditions with no mixed-use development, and Parcel 5 may be developed with Regional Commercial uses in the future, which would involve discretionary City approval with CEQA review.

Since the proposed buildings would not be constructed, No Project Alternative 2 would not achieve economies of scale and would not be able to meet the Project's basic objective of creating a vibrant, mixed-use "live, work, play environment." Although Parcel 5 could be developed under No Project Alternative 2, it would not be of the magnitude needed to meet the Project's objectives. Under No Project Alternative 2, development of the Project site with commercial, residential, and entertainment uses to the magnitude envisioned under the Project would not occur. The Project objective of enhancing these opportunities for local and regional residents or promoting transit-oriented infill development would not be met to the extent envisioned by the Project. There would be no new public open spaces and other community benefits created under No Project Alternative 2; however, existing open spaces and

community uses at the Project site would be maintained. Thus, the primary objectives of providing additional visitor-serving facilities, augmenting hotel availability, and providing additional opportunities for major employers to locate to the City would not fully be met.

No Project Alternative 2 would also limit the flexibility of Parcel 5's development to respond to changing market demands and ensuring that the development remains economically feasible throughout a multi-year process. No Project Alternative 2 would create approximately 2,230 jobs, instead of approximately 24,760 (Scheme A) or 28,720 (Scheme B) net new jobs under the Project. This is 91 percent fewer jobs than the Project would provide under Scheme A and 92 percent fewer jobs than the Project would provide under Scheme B. The tax revenues for the City would incrementally increase over existing conditions rather than increase with implementation of the Project. As such, No Project Alternative 2 would not meet the basic Project objectives.

Reduced Intensity Alternative

The Reduced Intensity Alternative would meet the Project objectives of modernizing the Landfill for more productive uses, creating a vibrant, "live, work, play environment" in the City Center, and stimulating economic development and job creation in the City, although not to the same extent as the Project. This alternative would still meet many of the Project objectives such as promoting transit-oriented infill development; enhancing entertainment, dining, and shopping opportunities for local and regional residents and workers; providing additional opportunities for major employers to locate to the City through the creation of attractive office campuses; providing additional visitor-serving facilities for people visiting Levi's Stadium, the Convention Center, and theme park; providing new public open spaces; and creating a significant new tax base and increasing City revenues.

Compared to the Project, the Reduced Intensity Alternative would result in fewer potential weekday customers within walking distance of the retail and entertainment opportunities in the City Center, fewer job opportunities within walking distance of the residential units in the City Center, and fewer jobs overall to support the City's overall economic and job creation objectives. This alternative represents the amount of office development that the parcels surrounding the City Center could accommodate without the expense of constructing parking structures on those parcels. However, the Project Developer has determined that the reduction in Project revenues associated with developing less office space under this alternative is greater than the savings gained by not building the additional space and structured parking.

Increased Housing Alternative

This alternative would meet many of the Project objectives of modernizing the Landfill for more productive uses, creating a vibrant, mixed-use, "live, work, play environment" in the City Center, and stimulating economic development and job creation in the City, although not to the same extent as the Project. To a lesser degree than the Project, this alternative (because it still proposes a high-intensity mixed-use development with residential, retail, office, hotel, and entertainments uses) would still meet many of the Project objectives such as promoting transit-oriented infill development; enhancing entertainment, dining, and shopping opportunities for local and regional residents and workers; providing additional opportunities for major employers to locate to the City through the creation of attractive office parks; providing additional visitor-serving facilities for people visiting Levi's Stadium, the Convention Center, and theme park; providing new public open spaces; and creating a significant new tax base and increasing City revenues.

Compared to the Project, the Increased Housing Alternative would result in fewer potential weekday customers working in offices in proximity to the retail, hotel, food and beverage, and entertainment opportunities in the City Center and fewer job opportunities in offices in proximity to the residential units in the City Center. However, the addition of more housing in the City Center could provide an increase in a permanent on-site customer base for the retail, food, and beverage and entertainment uses in the City Center. Further, visitors of the residents on-site would also contribute to the walk-in customer base for retail, food, and beverage and entertainment uses in the City Center. Collectively, the on-site residents and their guests could partially offset the decrease in walk-in customers working in offices.

5.5 Alternatives Considered but Rejected

State CEQA Guidelines Section 15126.6(f)(2) states that a Draft EIR must consider off-site alternatives if such alternatives are deemed to be feasible by the lead agency. As stated in State CEQA Guidelines, Section 15126.6(f)(1), factors that may be considered when a lead agency is assessing the feasibility of an alternative include:

> site suitability, economic viability, availability of infrastructure, general plan consistency, other plans or regulatory limitations, jurisdictional boundaries (projects with a regionally significant impact should consider the regional context), and whether the proponent can reasonably acquire, control, or otherwise have access to the alternative site (or the site is already owned by the proponent).

Alternative Site Locations

The 240-acre Project site is underutilized compared to the existing surrounding far denser land uses. The Project site is uniquely located since it is directly across from the new and active Levi's Stadium, Convention Center, and Great America Amusement Park, and is well served by public transit. To capitalize on the advantageous location of the Project site, the Project is proposed as a public/private partnership development aimed to achieve the City's goals of creating a vibrant, mixed-use, "live, work, play environment" while maximizing the City's return on its land holdings.

Other than the Project site, there are no comparable large areas of land within the City where the Project could be relocated so as to meet the Project's objectives. Because of the unique and advantageous location of the Project site, even if there were a site of comparable size at another location within the City that was available for development (which there is not), that site would not have the defining characteristic of being adjacent to Levi's Stadium, which helps to anchor the Project and which in turn is anticipated to be beneficial to Levi's Stadium. If the Project Developer were to secure control over a similar large site within the greater Bay Area but outside the City's boundaries, development of that site would not meet multiple objectives that have been specifically designed to benefit the City and its residents concerning the long-term development and use of this particular site within the City of Santa Clara. Therefore, relocating the Project outside of the City would essentially be a different project rather than a Project alternative. Furthermore, it is unlikely that relocating Project uses to a different site would avoid or substantially lessen any of the significant environmental impacts of the Project at its proposed location because the impacts associated with increased vehicle trips (e.g., traffic, air quality and GHG) are likely to be similar anywhere in the Bay Area, and most undeveloped areas of this size are likely to have greater natural habitat values than a former landfill. Thus, an off-site alternative would be infeasible because it would not attain most of the basic Project objectives and would not sufficiently reduce the Project impacts.

Alternative Development Scenarios

Greater Reductions in Intensity

Reductions greater than 30 percent in the development intensity of the Project parcels were evaluated as an alternative and determined to be economically infeasible due to the costs associated with developing the site. Despite the fact that the immediate surrounding area is well served by utilities and infrastructure, the specific site, consisting of a landfill overlain by a golf course, restaurant and banquet facility, and BMX track, does not have any basic infrastructure. The cost of providing this infrastructure must be borne by the economic structure of the Project. In addition to normal site infrastructure costs for roads, water, domestic sewer and stormwater lines, and electrical distribution, this Project must also address and fund all of the costs associated directly with the process of building on a landfill; those costs can be termed premium costs associated with development of this site in particular. These premium costs include construction of the elevated podium over the Landfill in the City Center, which is necessary for geotechnical and environmental reasons to support the intensity and mix of uses necessary to meet the primary Project objectives. Premium costs also include utilizing superior foundation systems for geotechnical reasons and replacing and enhancing the Landfill gas extraction and methane collection systems. Collectively, these infrastructure and premium site development costs can be thought of as "horizontal site development costs," as opposed to the "vertical development" costs associated with building structures.

These horizontal site development costs would most likely not be meaningfully reduced under the Reduced Intensity Alternative because such costs are generally incurred regardless of how much vertical development is placed on top of horizontal site improvements. Thus, the per-square-foot costs of development would significantly increase under the Reduced Intensity Alternative because there would be 30 percent less square footage of vertical development to which the horizontal site development costs could be proportionately allocated. Increasing the per-square-foot costs of development without increasing the revenue-generating potential of the development decreases the amount of return on capital, which could adversely affect the ability to finance the Project. Depending on a number of factors, it may be feasible to structure the terms of the transactions for this development to account for the increased financial burden associated with a 30 percent reduction in development intensity, but it is highly unlikely to be financially feasible to achieve a greater than 30 percent reduction.

Further Increased Housing

Alternatives that would further increase the amount of housing beyond the Increased Housing Alternative were considered, but determined to be infeasible and were therefore not carried forward for detailed analysis. Four additional increased housing scenarios were considered, as described below.

- Construction of housing on Parcels 1, 2, 3 and the northwest portion of Parcel 4 is not feasible because it would be cost-prohibitive to expand the elevated podium structure planned for the Parcel 4 portion of the City Center. In the site evaluation and risk assessment prepared for the post-closure land use landfill regulatory approval process, the elevated podium structure is specified as a measure for preventing potential exposures of residents to vapor intrusion from constituents of potential concerns (COPCs) in landfill gases. The high density of mixed-use development planned for the City Center would be able to financially support the premium development costs associated with constructing the elevated podium structure. However, the medium densities associated with the office and retail development in the other portions of the

Project site are not enough to support the premium development costs associated with constructing the elevated podium structure.

- Increasing the height of the residential structures planned for Parcels 4 and 5 in the City Center enough to accommodate significant additional residential units would also not be feasible. As described below, if all of the residential structures were required to be built at the maximum height contemplated under the entitlement documents for the Project site (which is based on the FAA height restrictions on structures near airports), it would create significant design and marketing issues that would adversely affect the ability of the Project to create a vibrant live, work, and play environment consistent with the Project objectives. Although the exact location and type of residential structures to be located within Parcels 4 and 5 has not been determined, there are three areas within City Center where residential structures are likely to be located: in the portion of Parcel 5 closest to the transit station, in the portion of Parcel 4 closest to the Convention Center and to Parcel 5, and in the portion of Parcel 4 closest to the office development planned in Parcel 3. To maximize density near transit, the residential structure in Parcel 5 is likely to be the maximum height contemplated under the entitlement documents for the site. Likewise, the residential structures planned near the convention center are also close to transit and likely to be at heights approaching the maximum. These two residential areas are located on the edge of the Project site, and higher structures would not interfere with connectivity within the Project site. By contrast, the other residential area in Parcel 4 is adjacent to the office development in Parcel 3; that office development is likely to consist of medium-height buildings. The residential area adjacent to it should therefore also consist of medium-height buildings to assist with visual integration and not create a "wall" between City Center and the rest of the development. Residential density is less important in this portion of Parcel 4 because it is not as close to transit. Placing medium-height residential structures in this area would allow for a mix of product types because not all potential residents would choose to live in a high-rise structure. It would also allow for a mix in rents. Finally, the construction of high-rise residential structures in this area would significantly increase the cost per unit to construct because building codes for high-rises require steel or concrete frames rather than wood frames and additional design features related to emergency response.
- Replacing the office space planned under the Project for the Parcel 5 portion of the City Center would not be feasible because it would eliminate any office space in City Center (because the Increased Housing Alternative already eliminates the office space in the Parcel 4 portion of City Center), thereby not meeting the basic Project objective of creating a vibrant, mixed-use "live, work, play environment" for the City Center. Additionally, this alternative would impede the Project objective of providing shared parking opportunities for events at Levi's Stadium. Under the Project, parking spaces at Parcel 5 designated for office uses would be used for all events held at Levi's Stadium outside of office business hours. Increased housing at Parcel 5 would require these parking spaces to be dedicated to the additional residential units.
- Replacing any other uses (e.g., retail, food and beverage, hotel, or entertainment) in the City Center with residential uses would not be feasible because it would eliminate the entertainment, dining, and shopping options, thereby not meeting the basic Project objective of creating a vibrant, mixed-use "live, work, play environment" by conglomerating the uses at the City Center. Although the entertainment, dining, and shopping options could be located elsewhere on the Project site and at the same designated square footage, spreading out these uses would generate a lower level of activity than the level envisioned under the Project objectives. This alternative would also impede the Project objectives of enhancing the entertainment, dining, and shopping opportunities for local and regional residents and workers and providing additional visitor-

serving facilities for people visiting Levi's Stadium, the Convention Center, and the Great America Amusement Park.

Relocation of Housing Outside of ALUC Noise Contour Area

Under this alternative, the residential units planned under the Project in the southwest portion of Parcel 4 that are within the Airport Land Use Commission's (ALUC's) 65 dBA CNEL contour would instead be located outside the 65 dBA CNEL contour.

As discussed further under the Increased Housing Alternative, above, developing more than 320,000 gsf of additional residential units would be infeasible. Relocating the residential structures to Parcels 1, 2, 3, or to the northwest portion of Parcel 4 outside the City Center would be infeasible because it is cost-prohibitive to construct an elevated podium structure on those parcels. Relocating the residential structures to Parcel 5 is infeasible because it would impede the Project objective of providing shared parking opportunities for all events held at Levi's Stadium. Switching the locations of the residential structures with either the hotel or the office space planned for the Parcel 4 portion of City Center would place those uses in a sub-optimal location for commercial development that would jeopardize their financial viability. Thus, this alternative was dismissed from further consideration.

Removal of All Waste in Former Landfill ("Clean Closure" Alternative)

In response to comments on the Notice of Preparation, an alternative involving removal of all waste in the former Landfill prior to development of the site (also known as a "clean closure") was considered. It is estimated that the costs associated with waste removal and associated transportation, off-site disposal, and site restoration would be approximately $738.5 million.[7] This cost estimate does not include the additional costs that would be incurred with mitigating the impact of waste removal activities on the PG&E high-voltage transmission towers and lines that are currently on-site, assuming the necessary permits and approvals could be obtained for relocating and/or reconstructing these towers and lines.

The estimated cleanup and removal of all waste in the former Landfill would last at least 20 months. During this time, there would be substantial odors, noise, and emissions of dust and methane gas that would be difficult to mitigate. This would impact sensitive receptors in the vicinity of the Project site.

It is estimated that transportation of the waste for off-site disposal would result in 220,000 new truck trips on City streets and local and regional freeways. These trucks would each carry up to 25 tons of waste for 100 miles round trip. Approximately 15 percent of the waste would be classified as hazardous waste. In addition, the depth of excavation required to remove the waste would significantly lower the elevation of the site below the existing Lafayette Street. Substantial soil imports, resulting in an additional 220,000 truckloads with 75-mile round trips on City streets and local and regional freeways would be required to restore the elevation to street level. These 440,000 truckloads for the waste removal and soil importation over a 20-month period would be four times more than (and be in addition to) the 108,000 truckloads estimated for the 14-year construction period for the entire Project; the 75 to 100 mile new truck trips would be 10 to 50 times longer than the short trips associated with the construction, which would range from 2 to 7.3 miles. Therefore, this alternative would result in substantially greater construction-traffic-related air emissions, GHG emissions, noise, and traffic. Because of the extraordinary costs and significant community disturbance that would be created, it was

[7] Related. 2015. *Draft Santa Clara All-Purpose Landfill Clean Closure Scope and Budget Summary*. May.

determined that this alternative would be infeasible and would not minimize Project environmental impacts. Thus, it is not carried forward for detailed analysis.

5.6 Impact Assessment

This section evaluates whether the alternatives would reduce the significant impacts of the Project to less-than-significant levels and/or would generate impacts other than those identified for the Project. Summarized lists of recommended mitigation measures for each alternative are provided in the analysis below; however, these mitigation measures are fully described in each resource section within Chapter 3, *Environmental Impact Analysis*, of this document. In addition, a summary comparative analysis of the Project and its alternatives is provided in Table 5-12 at the end of this section.

No Project Alternative 1

Under No Project Alternative 1, redevelopment of Parcels 1–5 would not occur and all existing buildings and uses at the Project site would remain as is. The three existing off-site buildings in Tasman East would also remain and would not be demolished to accommodate the Lick Mill Boulevard extension proposed under the Project. Approximately 510 employees would continue to be employed under the existing uses on Parcels 1–4 and at the three off-site office buildings in Tasman East. Parcel 5 would remain vacant and used as surface parking. No construction would occur under No Project Alternative 1.

Land Use

No Project Alternative 1 would not alter existing conditions of Parcels 1–5 and, therefore, would not change the existing land uses. The Project site would remain designated Parks/Open Space (Parcels 1–4 and the Retention Basin) and Regional Commercial (Parcel 5) under the City's General Plan. In addition, the zoning at the Project site would remain as Public, Quasi-Public, Public Park or Recreation (B) (Parcels 1–4 and Parcel 5) and Commercial Park (CP) (Parcel 5). Unlike the Project, No Project Alternative 1 would be consistent with the current General Plan designations for Parcels 1–4 and would not require a General Plan amendment or rezoning. No Project Alternative 1 would be consistent with what was envisioned in the General Plan for the Project site. Unlike the Project, this alternative would not further exacerbate the jobs/housing ratio within the City and, therefore, would be consistent with the related General Plan goals. In addition, No Project Alternative 1 would not place residential uses within the Norman Y. Mineta San José International Airport (SJC) noise contours; therefore, this alternative would be consistent with the Comprehensive Land Use Plan (CLUP) noise policies. Thus, No Project Alternative 1 would result in no impacts on land uses and would not conflict with existing plans or policies. (NI)

Aesthetics

Unlike the Project, No Project Alternative 1 would not alter existing conditions at the Project site or at the three off-site buildings proposed for demolition under the Project. Therefore, this alternative would not change the existing visual character or create a new source of substantial light or glare. Parcels 1–4 would remain as the Santa Clara Golf & Tennis Club with restaurant and banquet facility, and the BMX track, and all existing structures (Fire Station 10, Ameresco Methane Plant and City vehicle washing station), trees, and vegetation, including the Retention Basin, would remain. Parcel 5 would remain as a paved surface parking lot, and the three off-site buildings in Tasman East would remain as is. The proposed development under the Project would increase massing, height, and bulk over existing conditions and change views of the Project site; No Project Alternative 1 would not. Therefore, No

Project Alternative 1 would not change the existing visual character or quality at the Project site, resulting in no impact. (NI)

Transportation

No Project Alternative 1 would retain existing conditions and would not generate additional traffic or parking demand. This alternative would result in the same daily vehicle trips and affected intersections as the baseline because no new uses would be added at the Project site. However, pedestrian facilities would not improve over existing conditions because the existing sidewalk gaps would remain. No transportation-related impacts would result with No Project Alternative 1. (NI)

Air Quality

No Project Alternative 1 would not construct new uses and would not generate air emissions above the baseline. Because no construction would occur, No Project Alternative 1 would not exceed the Bay Area Air Quality District's (BAAQMD's) daily significance thresholds for criteria pollutants during construction. In addition, No Project Alternative 1 would result in no increase in daily trips compared to existing conditions. Therefore, the operational emissions would also not exceed BAAQMD thresholds. The Project would result in significant and unavoidable impacts on air quality, while this alternative would result in no impact. (NI)

Greenhouse Gas Emissions

No Project Alternative 1 would retain the existing uses at Parcels 1–5 and, therefore, would result in no new direct GHG emissions from area and mobile sources or indirect emissions from electricity generation and solid waste. Existing uses, particularly the golf course, would continue to operate and result in both direct and indirect emissions, including electricity generation for lighting and irrigation water use. However, because new development would not occur at these parcels, there would be no increase in GHG emissions over the baseline conditions. Because this alternative would not construct new buildings and no new uses would operate at the parcels, there would be no increase in GHG emissions over the baseline, resulting in no impact. (NI)

Noise

The Project would expose people to excessive and permanent increases in ambient noise levels, resulting in a significant and unavoidable impact. Although the Project would require mitigation to reduce vibration impacts during construction to a less-than-significant level, there would be no impact related to vibration levels under No Project Alternative 1. No Project Alternative 1 would retain the existing conditions at Parcels 1–5 and, therefore, would not substantially change the existing noise levels. Noise levels at the Project site could incrementally increase with future use of the golf course, tennis facility, and restaurant and banquet facility because of potential increased tourist demand associated with Levi's Stadium. However, this increase in noise is expected to be typical growth already anticipated for the area. As such, no noise-related impacts would occur under this alternative. (NI)

Cultural Resources

The Project would require mitigation to reduce impacts on archaeological resources, human remains, and paleontological resources. Under No Project Alternative 1, Parcels 1–5 would not be developed. Therefore, unlike the Project, No Project Alternative 1 would not disturb cultural resources, including archeological resources, paleontological resources, and human remains. Similar to the Project, No

Project Alternative 1 would have no impact on historic structures. Thus, No Project Alternative 1 would have no impact on cultural resources. (NI)

Biological Resources

No Project Alternative 1 would not include the demolition of existing buildings, the construction of new buildings, or the removal of vegetation. No Project Alternative 1 would have no direct impact related to special-status plant species, potential interference with migration routes or nursery sites for common species, or a Habitat Conservation Plan (HCP) or Natural Community Conservation Plan (NCCP). No Project Alternative 1 would retain the existing uses at Parcels 1–5 and at the three off-site office buildings in Tasman East. Therefore, unlike the Project, No Project Alternative 1 would not include the demolition of existing buildings, the construction of new buildings, or the removal of trees or vegetation. Therefore, no impact on biological resources would occur on the Project site, and no mitigation measures would be required. (NI)

Geology and Soils

Similar to the Project, No Project Alternative 1 would have no impact on septic tanks and alternative wastewater services. There are no faults that cross the Project site, and the site is not within an Alquist-Priolo Earthquake Fault Zone. Thus, No Project Alternative 1 would have no impact related to the rupture of a known earthquake fault. No Project Alternative 1 would retain the existing conditions on-site and, therefore, would not change the existing geology or soil conditions. Construction would not occur under this alternative, and there would be no topographic changes that could alter the erosion potential or disturb unstable soils. Therefore, there would be no impact related to geologic conditions, and no mitigation measures would be required. (NI)

Hydrology and Water Quality

No Project Alternative 1 would retain the existing uses at Parcels 1–5 and at the three off-site buildings at Tasman East and, therefore, would not change existing hydrology or water quality conditions at the Project site. This alternative would not develop the Project site and would not add employees over existing conditions. Because no additional employees would be expected with No Project Alternative 1, additional people would not be exposed to the 100-year floodplain; as a result, there would be no impact. Similar to the Project, No Project Alternative 1 would have no impact related to flooding by seiche, tsunami, or mudflow. Although the Project would have a less-than-significant impact on groundwater, groundwater supplies, and groundwater recharge, No Project Alternative 1 would have no impact. The Project would increase impervious surfaces, result in the degradation of water quality in water bodies, and have a significant impact on water quality standards or water discharge requirements (WDRs). In contrast, No Project Alternative 1 would have no impact. Therefore, no impact related to hydrology and water quality resources would occur under this alternative, and no mitigation measures would be warranted. (NI)

Hazards and Hazardous Materials

No Project Alternative 1 would retain the existing uses at the Project site and, therefore, would not change hazard-related impacts. As with the Project, No Project Alternative 1 would not expose employees or structures to wildland fires, airport hazards, or on-site hazardous materials, pursuant to Government Code Section 65962.5. Similar to the Project, No Project Alternative 1 would not create a potentially significant hazard for nearby schools from emissions or the handling of hazardous or acutely hazardous materials. In addition, No Project Alternative 1 would not add traffic to the area and,

therefore, would not impair emergency access and emergency plans. However, unlike the Project, No Project Alternative 1 would not demolish any structures or disturb the soil and underlying landfill. Parcels 1 and 3 are the only parcels that have separate leachate collection and removal systems (LCRSs). Leachate is currently recovered from only one leachate riser on Parcel 3. As such, No Project Alternative 1 would have no impact related to groundwater quality because Parcels 1 and 3 would not be disturbed. However, it is important to note that unlike the Project, No Project Alternative 1 would not enhance the existing gas extraction system and leachate collection systems, which would enhance groundwater monitoring. In addition, No Project Alternative 1 would not have the potential to expose people to subsurface fires. Therefore, no impact relative to the potential release of hazardous materials would occur under No Project Alternative 1, and no mitigation measures would be required. (NI)

Population and Housing

No Project Alternative 1 would have no impact related to the displacement of people and housing. As previously described, the existing 510 employees would continue to be employed at the Project site and at the three off-site buildings in Tasman East. No Project Alternative 1 would result in no change in employment levels over existing conditions. As such, No Project Alternative 1 would not result in a demand for new housing units within the City or proximate local jurisdictions, and no impact on population and housing would occur at the Project site. (NI)

Public Services

No Project Alternative 1 would retain the existing uses of Parcels 1–5 and at the three off-site buildings and, therefore, would have no impact on public services. Fire Station 10 would remain at its existing location and would not be reconstructed. In addition, the golf course, restaurant and banquet facility, tennis courts, Ameresco Methane Plant, City car washing facility, and BMX track would continue under existing conditions. Therefore, this alternative would not result in a reduction of recreational facilities in the City. In contrast, the Project would have a less-than-significant impact on fire, police, school, recreation, and library facilities. Because No Project Alternative 1 would most likely not increase the number of employees or residents at the Project site, there would not be an increased demand for fire, police, or emergency services; schools; libraries; or recreational facilities. Therefore, no impact related to public services would occur on the Project site under No Project Alternative 1. (NI)

Utilities and Service Systems

No Project Alternative 1 would retain the existing uses at the Project site. Approximately 510 employees would continue to be employed under the existing uses on Parcels 1–4 and at the three off-site buildings in Tasman East. As such, the Project site under No Project Alternative 1 would have similar water, sewer, storm drainage, energy, and operational solid waste demands as under existing conditions. In contrast, the Project would have a less-than-significant impact on the City's water demand, wastewater generation, recycled water delivery system, wastewater infrastructure, storm drain system, energy demand, and solid waste. Thus, unlike the Project, No Project Alternative 1 would have no impact on utility and service systems at the Project site. (NI)

No Project Alternative 2

As described above, under No Project Alternative 2, the redevelopment of Parcels 1–4 would not occur and all existing buildings and uses would remain. Parcel 5 would be developed with Regional Commercial uses in accordance with the City's General Plan.

Land Use

No Project Alternative 2 would not alter existing conditions of Parcels 1–4 and, therefore, would not change the existing land uses. The zoning at the parcels would remain as Public, Quasi-Public, Public Park or Recreation (B) and the land use designation under the City's General Plan would continue as Parks/Open Space. Therefore, No Project Alternative 2 at Parcels 1–4 would be consistent with the current General Plan designations and zoning. No Project Alternative 2 would also not construct housing within the ALUC noise contours; therefore, no conflict with the CLUP goals and policies would occur. (NI)

The development of Parcel 5 under No Project Alternative 2 would be similar to the uses proposed by the Project (except for housing) and permitted under the anticipated growth for the site. The Parcel would remain as a land use designation under the City's General Plan of Regional Commercial. However, Parcel 5 would need to be rezoned from B zoning and Commercial Park (CP) zoning in order to be consistent with the existing General Plan land use designation, requiring City Council review and approval. In addition, a General Plan Amendment would be required to increase the existing FAR requirements to accommodate the square footage proposed under No Project Alternative 2. Therefore, No Project Alternative 2 would not be consistent with the existing land use designation. However, the inconsistency with land use designations and zoning does not, by itself, constitute a significant environmental impact because the land use designations were not enacted to mitigate or lessen environmental effects as a primary objective. The rezoning and General Plan Amendment would meet the intent of the General Plan. Because of the general consistency with land use policies, any potential conflicts with the General Plan related to the rezoning and General Plan Amendment would be less than significant. (LTS)

Aesthetics

Unlike the Project, No Project Alternative 2 would not alter existing conditions of Parcels 1–4 and, therefore, would not change the existing visual character or create a new source of substantial light or glare. Parcels 1–4 would retain the Santa Clara Golf & Tennis Club, restaurant and banquet facility, Fire Station 10, BMX track, Ameresco Methane Plant and City car washing facility, and all existing structures, trees, and vegetation – including Retention Basin. Therefore, no impact to visual quality would occur on Parcels 1–4. (NI)

Parcel 5 would be developed with Regional Commercial uses, similar to the uses proposed by the Project. Parcel 5 under No Project Alternative 2 would redevelop the existing paved surface parking lot with buildings at a height of up to 17 stories. Therefore, similar to the Project, No Project Alternative 2 would change the existing visual character or quality at Parcel 5, especially as viewed from Tasman Drive. Although the height and massing would increase in this area, the development at Parcel 5 would be similar to its surroundings, such as the Santa Clara Convention Center, the Hyatt Regency, and Levi's Stadium. In addition, motorists along Tasman Drive are not considered sensitive receptors because of the short amount of time that they are in a particular view corridor. Additionally, the development would not be immediately visible from recreationists on the Guadalupe River Trail. Therefore, No Project Alternative 2 would result in a less-than-significant impact on the degradation of existing visual character or quality.

However, similar to the Project, No Project Alternative 2 could create a new source of light and glare that could adversely affect daytime or nighttime views in the area. Therefore, the impact on visual quality due to increased light and glare from No Project Alternative 2 at Parcel 5 would be significant. Implementation of Mitigation Measures AES-2.1 through AES-2.4, as presented for the Project, would reduce potential light, glare, and vehicle headlight impacts of the Project to a less-than-significant level.

Because No Project Alternative 2 would develop only Parcel 5, the magnitude of this impact would be less than the Project. (LTS/M)

Transportation

No Project Alternative 2 would retain existing conditions at Parcels 1–4 and would not generate additional traffic or parking demand. This would result in the same daily vehicle trips and affected intersections as the baseline conditions since no new uses would be added to this portion of the Project site. Therefore, no transportation-related impacts would occur on Parcels 1–4. (NI)

Parcel 5 would be developed with up to 825,000 gsf of Regional Commercial uses under No Project Alternative 2. These uses would be similar to the uses proposed for Parcel 5 under the Project, although since the residential uses would be replaced with office uses, the trip generation at Parcel 5 would be slightly higher compared to the Project. Operation of No Project Alternative 2 would increase the number of daily vehicle trips and affected intersections as compared to baseline conditions. However, because No Project Alternative 2 would develop only Parcel 5, the magnitude of this impact would be less than that of the Project. As shown in Table 5-5, No Project Alternative 2 would result in 14,360 net new daily trips, which is an 89.1 percent decrease as compared to the Project, Scheme B. Of these trips, 1,020 would occur in the AM Peak Hour (740 inbound and 280 outbound) and 1,020 would occur in the PM Peak Hour (440 inbound and 690 outbound).

Table 5-5. No Project Alternative 2 Trip Generation (Net New)

	AM Peak Hour			PM Peak Hour			
	In	Out	Total	In	Out	Total	Daily
Parcel 1	0	0	0	0	0	0	0
Parcel 2	0	0	0	0	0	0	0
Parcel 3	0	0	0	0	0	0	0
Parcel 4	0	0	0	0	0	0	0
Parcel 5	740	280	1,020	440	690	1,130	14,360
Total	**740**	**280**	**1,020**	**440**	**690**	**1,130**	**14,360**

Source: Fehr & Peers 2015.

Overall, at Parcel 5, No Project Alternative 2 would have an increased number of daily vehicle trips and affected intersections as compared to the Project since new commercial uses would be added to Parcel 5 (rather than residential uses). Regardless, since Parcels 1, 2, 3, and 4 would not be developed, No Project Alternative 2 would result in approximately 125,090 fewer trips than the Project. No Project Alternative 2 would greatly reduce impacts or reduce the severity of impacts by more than 50 percent for intersection level of service and freeway segment capacity, as compared to the Project. Similar impacts would occur to the existing transit system and to bicycle facilities as the Project. However, pedestrian facilities would not improve over existing conditions since the existing sidewalk gaps would remain.

No quantitative analysis of affected intersections or freeway segments was conducted for the alternative analysis. This alternative would require Mitigation Measures TRA-1.1 (vehicle trip reduction with transportation demand management [TDM]), TRA-3.1 (contribution for freeway improvements), TRA-18.1 (Construction Management Plan), and TRA-19.1 (Modified Traffic Management and Operations Plan [TMOP] and Traffic and Parking Management Plan). No Project Alternative 2 may also require Mitigation Measure TRA-1.2 (intersection Improvements, but only for significantly affected

intersections for this Alternative), TRA-2.1 and TRA-2.2 (Traffic Signal Installation), depending on impacts to signalized and unsignalized intersections. Some of these impacts may be significant and unavoidable, and thus overall No Project Alternative 2 would result in a significant and unavoidable impact to transportation. (SU)

Air Quality

No Project Alternative 2 would not construct new uses at Parcels 1–4 and would not generate air emissions above baseline conditions. Since no development would occur at these parcels, the existing uses would remain. Therefore, no impact to air quality-related impacts would occur on Parcels 1–4.

Construction Criteria Pollutants. Parcel 5 would be developed with Regional Commercial uses, similar to the Project. Similar to the development of Parcel 5 within the Project, construction of Parcel 5 may exceed the BAAQMD's average daily significance thresholds for criteria pollutants during construction, although the duration (number of days) of potential exceedances would be much less than the Project, given the lesser scale of overall development (approximately 9 percent of the gross square footage). Implementation of Mitigation Measures AQ-2.1 through AQ-2.4 would reduce construction criteria pollutant impacts to a less-than-significant level. (LTS)

Construction Toxic Air Contaminants (TAC) Emissions. Construction on Parcel 5 would also result in PM2.5 and Diesel Particulate Matter (DPM) emissions that could affect nearby receptors, including residences, parks, and schools and on-site residents and daycare centers. However, scaling from Project construction PM 2.5 and DPM emissions using square footage, No Project Alternative 2 would not result in exceedance of BAAQMD thresholds for PM 2.5 or DPM cancer or non-cancer risks for construction emissions. (LTS)

Operational Criteria Pollutants. No Project Alternative 2 would result in approximately 14,360 daily trips, approximately 10 percent of the build-out average daily trips (ADT) associated with Scheme B. On a gross square footage basis, No Project Alternative 2 would result in approximately 9 percent of the build-out of the Project. Based on operational criteria pollutant mitigated emissions (including Mitigation Measures GHG-1.2 and TRA-1.1) on a gross square footage or on a daily trip basis, No Project Alternative 2's operational emissions would not exceed BAAQMD thresholds, and criteria pollutant emissions would be 9 to 10 percent of the Project emissions. Thus, impacts would be substantially less than those of the Project and less than significant. (LTS)

Operational TAC Emissions. Parcel 5 operations would also result in vehicular TAC emissions that could affect sensitive receptors along off-site roadways affected by the project. Scaling based on square footage from the Project's emission impacts, this alternative would not result in exposure of sensitive receptors in exceedance of BAAQMD TAC thresholds. Parcel 5 operations would also result in exposure of on-site sensitive receptors to periodic TAC emissions from energy generator operations and loading dock truck emissions. Scaling based on square footage from the Project's emission impacts, this alternative would not result in exposure of sensitive receptors in exceedance of BAAQMD TAC thresholds. (LTS)

This alternative would not include any new residences and thus would not expose new residential receptors to existing sources of TAC emissions such as existing train, traffic, or stationary sources. (LTS)

This alternative may have daycare centers which could result in exposure of daycare users to existing TAC emissions, which, like the Proposed Project could be significant. Mitigation Measure AQ-7.1 would be required to provide filtration for HVAC systems that serve on-site daycare centers that are exposed to

TAC impacts that exceed BAAQMD project-level thresholds and would mitigate impacts to a less-than-significant level. (LTS/M)

Cumulative Impacts. This alternative would not contribute considerably to significant cumulative regional air pollutant levels because it would have project emissions less than BAAQMD thresholds which are used to estimate project contributions to regional criteria air pollutants. (LTS)

This alternative would result in TAC emissions that would contribute to cumulative TAC exposure to on-site and off-site sensitive receptors. Because this alternative would be smaller than the Project, the amount of TAC emissions would be less. For on-site receptors, the cumulative exposure would be less than BAAQMD cumulative thresholds. For off-site receptors, scaling using square footage and taking into account the non-project cumulative TAC emissions, there would still be a cumulative impact to certain off-site residential receptors (primarily because the non-project cumulative TAC emissions result in a significant impact on their own), but there would not be a significant cumulative impact to off-site school or park receptors. Like the Project, no feasible mitigation has been identified that would eliminate the significant cumulative impacts to certain off-site residential receptors, but this alternative would have a smaller contribution (2 percent) to this impact than the Proposed Project (16 percent). (SU)

Greenhouse Gas Emissions

No Project Alternative 2 would retain the existing conditions at Parcels 1–4 and, therefore, would result in no new direct GHG) emissions from area and mobile sources or indirect emissions from electricity generation and solid waste. Existing uses, particularly the golf course, would continue to operate and result in both direct and indirect emissions from electricity generation for lighting and irrigation water use. However, because new development would not occur at these parcels, there would be no increase in GHG emissions over the baseline conditions. Therefore, no impact to GHG emission-related impacts would occur on Parcels 1–4. (NI)

Parcel 5 would be developed with Regional Commercial uses under No Project Alternative 2, similar to the Project in Parcel 5. Development would result in new direct GHG emissions from area and mobile sources and indirect emissions from the consumption of electricity and water and waste generation that would occur with intensification of uses relative to exiting conditions. Based on mitigated operational GHG emissions in terms of square footage or daily trip generation, GHG emissions for No Project Alternative 2 would be 9 to 10 percent of those (on a mass emission basis) for the Project and less than the BAAQMD efficiency significance threshold (4.6 $MTCO_2e$/service population), based on consistency with the AB 32 reduction target. However, the emissions would exceed the 2030 efficiency metric used evaluated in this EIR (2.7 $MTCO_2e$/service population). Thus, overall, there would be a significant impact on GHG emissions under No Project Alternative 2. Implementation of Mitigation Measures GHG-1.1 (construction) and GHG-1.2 (operations) would reduce impacts but not to a less-than-significant level. (SU)

Operation of the No Project Alternative 2 would require implementation of all applicable measures in the City's Climate Action Plan (CAP) as well as measures to address long-term GHG reductions, beyond those necessary to meet the BAAQMD AB 32 thresholds for 2020. With implementation of Mitigation Measures GHG-1.2 and TRA-1.1, this alternative would implement GHG reduction measures that would facilitate the accomplishment of long-term State goals, as articulated in Executive Orders B-30-15 and S-03-05 (along with federal and State reduction efforts). However, the lack of residential uses in Alternative 2 would result in fewer opportunities for reductions in vehicle miles traveled since

there would not be a wide mix of uses on the Project site. Impacts relative to plan and policy consistency would be greater than the Project but would remain less than significant. (LTS)

Operation of No Project Alternative 2 would be similar to the Project in that certain low-lying parts of the Project site and parts of adjacent roadways providing access to the Project site may be susceptible to flooding, as discussed in Section 3.10, *Hydrology and Water Quality.* Otherwise, the Project would not exacerbate other climate-change related issues, because energy and water efficiency strategies associated with the Project (as required by the City's CAP could reduce or alleviate potential heat-related and water resource-related climate change impacts on area residents. As discussed in Section 3.4, *Greenhouse Gas Emissions*, no significance determination is made relative to climate change effects on the Project.

Noise

No Project Alternative 2 would retain the existing conditions at Parcel 1–4 and, therefore, would not change the existing noise levels beyond the very minor increases associated with the potential increased use of the golf course and other on-site facilities. However, this increase in noise is expected to be a result of the typical growth that is already anticipated for the area. No noise-related impacts would occur on Parcels 1–4.

The development at Parcel 5 under No Project Alternative 2 is likely to result in similar construction and operational noise and vibration effects as the development of Parcel 5 with Project implementation. Development of this parcel under this alternative could have a significant impact related to construction noise, as this alternative would involve the same types of construction equipment and similar worst-case[8] distances to noise sensitive land uses as the Project. However, because No Project Alternative 2 would develop only Parcel 5, this impact would be localized to the vicinity of Parcel 5 and would affect fewer off-site receptors. Although No Project Alternative 2 could affect fewer off-site noise-sensitive land uses than the Project, the impact related to construction noise for No Project Alternative 2 would be significant. Mitigation Measure NOI-1.1 would require a construction noise control plan to reduce construction noise to a less-than-significant level. (LTS/M)

The development of Parcel 5 under No Project Alternative 2 would result in an increase in vehicle trips and employment growth as compared to existing conditions, which would lead to an increase in traffic in the vicinity of the Project site. However, the Project would generate up to 140,730 daily vehicle trips (depending on which scheme is implemented), whereas No Project Alternative 2 at Parcel 5 would only generate up to 14,360 daily vehicle trips, or less than 10 percent of the vehicle trips associated with the Project. Noise modeling was conducted for roadway segments in the vicinity of the Project site using the 10 percent assumption indicating that No Project Alternative 2 could increase traffic noise in the vicinity of the development area by between 0 dBA and 2 dBA, whereas modeling for the Project shows an increase in traffic noise levels by up to approximately 3 dBA on surrounding roadway segments. Traffic volumes and the associated traffic noise would increase considerably less with this alternative than with the Project, and it is unlikely that the development of Parcel 5 would substantially increase noise levels (i.e., an increase in noise greater than 3 dBA) on surrounding roadway segments. Direct traffic noise impacts to off-site receptors associated with No Project Alternative 2 would, therefore, be less than significant. (LTS)

[8] The worst-case distance is the distance between a noise receptor and the closest location on the Project site where construction activities could occur.

With regard to on-site receptor exposure to roadway and rail noise, because development located on Parcel 5 would be in the area of the Project site located closest to both the Union Pacific Railroad (UPRR) tracks and the light-rail tracks as well as Tasman Drive, impacts related to the roadway and rail noise would be similar for commercial development under No Project Alternative2 as under the Project. However, No Project Alternative 2 would have no impacts to on-site residential receptors since no new housing is included in this alternative. Noise impacts related to roadway and rail noise would be less than significant with mitigation for commercial uses associated with this alternative. (LTS/M)

Non-transportation operational noise effects, such as HVAC noise, would likely be similar to the Project, because commercial land uses developed as part of No Project Alternative 2 would have HVAC equipment. However, No Project Alternative 2 would not result in the development of residential land uses, so no new residences would be exposed to HVAC noise. The nearest existing off-site residences to Parcel 5 are located approximately 300 feet to the southeast, which is sufficiently far as to not be affected by HVAC or other building equipment noise. No Project Alternative 2 would result in less severe noise impacts from non-transportation operational noise sources. On-site commercial receptors, particularly hotels, would have significant exposure to Project stationary noise and to noise from Levi's Stadium during event days. Operational noise impacts from stationary sources on on-site receptors would be significant and unavoidable.

If hotels are developed on Parcel 5, outdoor areas at the hotels would be exposed to the adverse noise environment created by the SJC. Impacts on on-site receptors from public use airports would be significant and unavoidable. (SU)

Overall, there would be significant impacts related to construction noise and vibration and rail and stationary noise sources. Implementation of Mitigation Measures NOI-1.1 (construction noise control plan to reduce construction noise), NOI-1.3 (noise control plan to reduce noise at sensitive land uses), NOI-2.1 (pile-driving restrictions), and NOI-2.2 (vibration control plan to reduce vibration at sensitive land uses) would reduce impacts to less-than-significant levels. (LTS/M)

Cultural Resources

Similar to the Project, No Project Alternative 2 would have no impact on historic structures. No Project Alternative 2 would not demolish the existing buildings at Parcels 1–4 or at Tasman East for the Lick Mill Boulevard extension. As discussed in Section 3.9, *Cultural Resources*, the Project would result in significant impacts to archaeological resources, paleontological resources, and human remains. Under No Project Alternative 2, Parcel 5 would be developed with Regional Commercial uses, similar to those of the Project. Therefore, similar to the Project, No Project Alternative 2 could disturb cultural resources, including archeological resources, paleontological resources, and human remains. However, because No Project Alternative 2 would develop only Parcel 5, the area of disturbance would be significantly smaller than that of the Project. Overall, there would be a significant cultural resources-related impacts under No Project Alternative 2. Implementation of Mitigation Measures CR-1.1 through CR-1.3 (archeological resources), CR-2.1 through CR-2.3 (paleontological resources), and CR-3.1 (human remains) would reduce impacts to a less-than-significant level. (LTS/M)

Biological Resources

Similar to the Project, No Project Alternative 2 would have no direct impact on the loss or damage to special-status plant species, potential interference with migration routes or nursery sites for common species, or conflict with a HCP or NCCP. No Project Alternative 2 would retain the existing conditions at Parcels 1–4 and, therefore, would not include the demolition of existing buildings, the construction of

new buildings, or the removal of trees or vegetation. Therefore, no impact to biological resources would occur on Parcels 1–4 and at the off-site locations, and no mitigation measures would be needed.

No Project Alternative 2 would develop Parcel 5 with Regional Commercial uses, similar to the uses proposed by the Project. Parcel 5 is an urbanized site with land cover types (surface paving) that generally do not support habitat for special-status species. Because No Project Alternative 2 would not involve construction adjacent to or within San Tomas Aquino Creek or the Guadalupe River, no impacts on special-status species would occur in these water bodies or wetlands. However, the 81 trees currently at Parcel 5 could be removed under No Project Alternative 2 and could result in a significant impact by interfering with the movement of native migratory wildlife species. Of these trees, 32 are Protected Trees.[9] No Project Alternative would also construct new buildings with transparent or reflective glass, which could misdirect or confuse birds during flight. Therefore, development at Parcel 5 under No Project Alternative 2 would result in a significant impact on migratory wildlife species. In addition, Parcel 5 is in an area where burrowing owls could nest. Because of the presence of nesting burrowing owls in the vicinity of Parcel 5 (less than one mile away), development could result in the loss of occupied burrowing owl nesting habitat. No Project Alternative 2 would also result in increased vehicle emissions, which would contribute to cumulative nitrogen deposition impacts on serpentine grassland habitat and supported special-status species. Because No Project Alternative 2 would develop only Parcel 5, the magnitude of these impacts would be less than those of the Project. Implementation of Mitigation Measures BIO-1.1 (nesting and migratory birds), BIO-2.1 and BIO-2.2 (burrowing owls), and BIO-C.1 (Payment of nitrogen deposition fee) would reduce impacts to a less-than-significant level. However, it is unknown whether Mitigation Measure BIO-1.2 would be sufficient to mitigate impacts related to bird collisions. As such, this impact is considered significant and unavoidable, although to a lesser extent than the Project since fewer buildings would be constructed. (SU)

Geology and Soils

Similar to the Project, No Project Alternative 2 would have no impact on septic tanks and alternative wastewater services. There are no faults that cross the Project site, and the site is not within an Alquist-Priolo Earthquake Fault Zone. Thus, No Project Alternative 2 would have no impact on the rupture of a known earthquake fault.

No Project Alternative 2 would retain the existing conditions of Parcels 1–4 and, therefore, would not change the existing geology or soil conditions at the Project site. Since construction would not occur at Parcels 1–4 under No Project Alternative 2, there would be no topographic changes that could alter the erosion potential. Therefore, no impact to geology or soils would occur on Parcels 1–4 and at the off-site locations and no mitigation measures would be needed.

Development of the commercial uses on Parcel 5 under No Project Alternative 2 would likely include grading activity that may expose soil and potentially result in substantial soil erosion. Substantial soil erosion from wind and stormwater runoff could occur from this exposure, which would result in a significant impact. Therefore, similar to the Project, No Project Alternative 2 would have a significant impact on soil erosion. Parcel 5 is not underlain with landfill and, unlike the Project, would not be subject to landfill-related settlement and lateral spreading. Similar to the Project, development of Parcel 5 under No Project Alternative 2 would have a significant impact on geological conditions related to

[9] Protected Trees are designated as significant by the City because of their age, commemoration of an event, or memory of a person or event in history.

liquefaction, slope instability, and expansive and corrosive soils. However, because No Project Alternative 2 would develop only Parcel 5, the scale of this impact would be less than that of the Project. Particularly, because Parcel 5 is not underlain by landfill, all potential impacts associated with the landfill would not occur under this alternative.

Overall, there would be a significant impact to geology and soil-related impacts under No Project Alternative 2 with development of Parcel 5. Implementation of Mitigation Measures GEO-1.1 and GEO-2.1 through GEO-2.6 would reduce impacts to a less-than-significant level. (LTS/M)

Hydrology and Water Quality

Similar to the Project, No Project Alternative would have no impact related to flooding by seiche, tsunami, or mudflow. No Project Alternative 2 would retain the existing conditions at Parcels 1–4 and, therefore, would not change existing hydrology or water quality conditions at this portion of the Project site. No Project Alternative 2 would not develop Parcels 1–4 and would most likely not add employees over existing conditions. Therefore, no impact to hydrology and water quality resources would occur on Parcels 1–4 and at the off-site locations, and no mitigation measures would be warranted.

Similar to the Project, No Project Alternative 2 would have a less-than-significant impact on groundwater, groundwater supplies, and groundwater recharge. Parcel 5 is not underlain by landfill cover and waste, but is largely covered with impervious surfaces. Therefore, under existing conditions, the Project site does not contribute significantly to groundwater supplies by direct recharge through site soils. The Project and No Project Alternative 2 would each preserve the existing low-permeability cover of Parcel 5 and, therefore, the Parcel 5 recharge potential would remain essentially unchanged. No Project Alternative 2 would also result in a less-than-significant impact related to exposing people to dam failure inundation. This alternative would expose approximately 2,230 net new employees (but no new residents) to the potential dam failure inundation area for Anderson Dam and Reservoir and Lenihan Dam/Lexington Reservoir. However, the failure of these dams is considered remote.

Development at Parcel 5 would result in the same slight increase in impervious surfaces as the Project (5.5 acres to 6 acres). However, this slight increase would not substantially affect existing drainage patterns, resulting in a less-than significant impact. Additionally, No Project Alternative 2 would not construct a bridge over the San Tomas Aquino Creek; therefore, unlike the Project, Mitigation Measure WQ-3.1 and WQ-3.2 would not be required for No Project Alternative 2. In addition, unlike the Project, No Project Alternative 2 would not result in the degradation of water quality to these water bodies. However, No Project Alternative 2 would have a significant impact on water quality standards or water discharge requirements (WDRs); therefore, potential surface water quality impacts from the Parcel 5 development could be significant. Because No Project Alternative 2 would develop only Parcel 5, the magnitude of this impact would be less than that of the Project. Regardless, implementation of Mitigation Measure WQ-1.1, which is required for the Project and would also be applicable to No Project Alterative 2, would reduce impacts to a less-than-significant level. With mitigation measures, No Project Alternative 2 would have a less-than-significant impact on hydrology and water quality resources. (LTS/M)

Hazards and Hazardous Materials

As with the Project, No Project Alternative 2 would not expose employees or structures to wildland fires, airport hazards (new buildings would comply with Federal Aviation Administration (FAA) mandated height restrictions), or on-site hazardous materials that are pursuant to Government Code Section 65962.5. Therefore, there would be no impact under No Project Alternative 2.

No Project Alternative 2 would retain existing conditions on Parcels 1–4 and, therefore, would not change hazard-related impacts. Structures on Parcels 1–4 would not be demolished, and the soil and underlying landfill would not be disturbed. Therefore, no impact relative to the potential release of hazardous materials would occur on Parcels 1–4 or at off-site locations. No mitigation measures would be required.

No Project Alternative 2 would develop Parcel 5 with commercial uses, similar to the uses proposed by the Project. Small quantities of commercially available hazardous materials, such as household cleaning, swimming pool/spa, and landscaping supplies, as well as diesel fuel for backup generators, would routinely be handled and used at this development. Therefore, similar to the Project, No Project Alternative 2 would have a less-than-significant impact to the routine transport, use, or disposal of hazardous materials on the public or the environment. Similar to the Project, although No Project Alternative 2 would increase the amount of traffic in the Project vicinity, it would not be expected to interfere with emergency response and evacuation procedures described in the adopted plan. Because No Project Alternative 2 would develop only Parcel 5, the magnitude of this impact would be less than that of the Project.

The Project and No Project Alternative 2 would impact construction workers, the public, and/or the environment through the release of hazardous materials during demolition and excavation. Implementation of Mitigation Measure HAZ-2.1, as presented by the Project, mandates additional safety measures to further protect construction workers, which would result in a less-than-significant impact. Similar to the Project, No Project Alternative 2 would have a less-than-significant impact on creating a potential hazard to nearby schools from the emissions and handling of hazardous materials. The Project and No Project Alternative 2 would each have a less-than-significant impact related to aviation hazards at public-use airports. While the Project would have a significant impact on human health from subsurface hazardous materials, Parcel 5 is not located on a landfill. Therefore, since Parcels 1–4 would not be developed and Parcel 5 is hydraulically upgradient from the Landfill, there would be a less-than-significant impact from subsurface hazardous materials under No Project Alternative 2. Parcels 1 and 3 are the only parcels that have separate LCRSs; leachate is currently recovered from only one leachate riser, located at Parcel 3. Therefore, unlike the Project, No Project Alternative 2 would have no impact on groundwater quality because Parcels 1 and 3 would not be disturbed. However, it is important to note that unlike the Project, No Project Alternative 2 would not enhance the existing gas extraction system and leachate collection systems, which would enhance groundwater monitoring. In addition, since Parcel 5 is not located on the Landfill, No Project Alternative 2 would not have the potential to expose people to subsurface fires. No Project Alternative 2 would result in no impact related to subsurface fires.

However, soil and soil gases beneath Parcel 5 have been impacted by hazardous materials. Like the Project, construction activities under No Project Alternative 2, such as excavation and dewatering, could disturb contaminated soil and/or groundwater beneath the site and pose a potential threat to human health and the environment. Future site users (e.g., commercial workers, maintenance workers) could potentially be exposed to hazardous materials by direct exposure to soils or soil gases that migrate into buildings. If subsurface hazardous materials are not properly managed on Parcel 5, development of the No Project Alternative 2 could have a significant impact on human health and the environment. However, implementation of Mitigation Measures HAZ-5.1 and HAZ-5.2 would reduce significant impacts related to contaminants in the subsurface on Parcel 5 to a less-than-significant level.

Overall, there would be a less-than-significant impact related to hazards and hazardous materials under No Project Alternative 2. Implementation of Mitigation Measures HAZ-2.1, HAZ-5.1, and HAZ-5.2 would further reduce impacts to a less-than-significant level. No other mitigation measures outlined for the Project would be required for No Project Alternative 2. (LTS/M)

Population and Housing

Similar to the Project, No Project Alternative 2 would not demolish any buildings; therefore, this alternative would not result in impacts related to displacement of housing.

No Project Alternative 2 would retain the existing conditions at Parcels 1–4 and, therefore, would have no impact on population and housing-related impacts. As previously described, the existing 510 employees would continue to be employed on Parcels 1–4 and at the three off-site buildings in Tasman East. Accordingly, No Project Alternative 2 would not result in the displacement of people. In addition, since no new housing or employees would be located on Parcels 1–4, displacement of the population in the City or proximate local jurisdictions would not occur. Thus, no impact on population and housing would occur on Parcels 1–4.

As described above, Parcel 5 could be developed with a hotel, retail, and office development under No Project Alternative 2. Residential units would not be included in the Parcel 5 development under No Project Alternative 2. The Project could include up to 29,230 employees at full build-out, with approximately 1,990 employees and 480 residents located on Parcel 5. Under No Project Alternative 2, no residential units would be constructed, but the development area would be replaced by commercial uses. Therefore, while no increases in on-site residential populations would occur compared to existing conditions, a greater number of employees would be generated with the build-out of Parcel 5 (2,230 employees), which would induce population growth in the City and the region. Regardless, the employee growth would be within the Association of Bay Area Governments (ABAG) Projections and General Plan projections as Parcel 5 is already designated for commercial development. Therefore, although No Project Alternative 2 would induce growth, the growth at the Project site is included and planned for in the General Plan, resulting in a less-than-significant impact on population and housing. (LTS)

Public Services

No Project Alternative 2 would retain the existing uses of Parcels 1–4 and, therefore, would have no impact on public services. Fire Station 10 would remain at its existing location and would not be reconstructed. In addition, the golf course, tennis courts, restaurant and banquet facility, Ameresco Methane Plant, City car washing facility and BMX track would continue under existing conditions and, therefore, No Project Alterative 2 would not result in a reduction of recreational facilities in the City. Because No Project Alternative 2 at Parcels 1–4 would most likely not increase the number of employees or residents on these parcels, there would not be an increased demand for fire, police, or emergency services; schools; libraries; or recreational facilities. Therefore, no impact on public services would occur on Parcels 1–4.

No Project Alternative 2 would develop Parcel 5 with commercial uses, similar to the uses proposed by the Project. However, no residential units would be developed at Parcel 5; therefore, there would no change in residential demand for these services and facilities. The proposed daytime population of the employees at Parcel 5 would increase the demand for fire and police services by adding approximately 1,990 employees to the typical daytime population. This would increase the Santa Clara Fire Department (SCFD) and the Santa Clara Police Department (SCPD) service areas to approximately 206,842 people. With 154 budgeted Suppression Division populations at SCFD, No Project Alternative 2 would degrade the daytime population ratio from 0.75 firefighter per 1,000 persons to 0.74 firefighter per 1,000 persons. With 145 officers at SCPD, No Project Alternative 2 would degrade the daytime population ratio from 0.71 officer per 1,000 residents to 0.70 officer per 1,000 residents. However, the need for additional firefighters, officers, and other staff members could be accommodated in existing facilities. No fire or police facilities would need to be expanded. Similar to the Project, No Project Alternative 2 would

have a less-than-significant impact on fire, police, school, recreation, and library facilities. However, because No Project Alternative 2 would develop only Parcel 5, the magnitude of this impact would be less than that of the Project. (LTS)

Utilities and Service Systems

No Project Alternative 2 would retain the existing conditions at Parcels 1–4 and, therefore, would not change the existing utility or service systems. Approximately 510 employees would continue to be employed under the existing uses on Parcels 1–4 and the three off-site buildings in Tasman East. Parcels 1–4 would have similar water, wastewater, storm drainage, energy, and operational solid waste demands as under existing conditions. Therefore, no impact on utility and service systems would occur on Parcels 1–4.

No Project Alternative 2 would develop Parcel 5 with commercial uses, similar to the uses proposed by the Project. This would include changes to the existing utility and service system, as well as an increase in approximately 2,230 employees associated with the build-out (although no residential units would be constructed). Similar to the Project, No Project Alternative 2 would have a less-than-significant impact on water demand, wastewater generation, and solid waste. However, because No Project Alternative 2 would develop only Parcel 5, the magnitude of these impacts would be less than under the Project. Similar to the Project, No Project Alternative 2 may require the expansion of the City's water delivery system. Nonetheless, as with the Project, No Project Alternative 2 would implement all relevant mitigation measures included in the EIR that apply to water line and recycled water line construction on- and off-site.

As with the Project, No Project Alternative 2 could contribute to the need for additional off-site wastewater delivery systems due to future insufficient pumping capacity. Mitigation Measure UT-3.1, as required for the Project, would be implemented to address No Project Alternative 2's contribution to a cumulative wastewater pumping capacity deficit. In addition, as with the Project, No Project Alternative 2 would be required to comply with Santa Clara Valley Water District (SCVWD) regulations and reduce peak flows from No Project Alternative 2 to pre-development conditions. Mitigation Measure WQ-1.1, as required for the Project, would be implemented to reduce total runoff rates and associated pollutant discharges by removing pollutants from stormwater using methods such as filtration, infiltration, and sedimentation. Mitigation proposed to address GHG emissions (see Section 3.5, *Greenhouse Gas Emissions*), as required for the Project, would be implemented so that No Project Alternative 2 would not result in the wasteful, inefficient, or unnecessary use of energy. Therefore, as with the Project, potential impacts to the City's water and recycled water delivery system, wastewater infrastructure, storm drain system, and energy demand during operation would be less than significant with mitigation under No Project Alternative 2. However, because No Project Alternative 2 would develop only Parcel 5, the magnitude of these impacts would be less than those of the Project. (LTS/M)

Reduced Intensity Alternative

The Reduced Intensity Alternative would include a 30 percent reduction in the amount of floor area for office uses. This would equate to approximately 6.46 million gsf of building area, approximately 3,270 new residents, and 14,730 net new employees. As with the Project, the Reduced Intensity Alternative would include residential, retail, office, hotel, and entertainment uses. As shown in Figure 5-1, the site plan of the Reduced Intensity Alternative would be generally similar to the Project; however, the Reduced Intensity Alternative's building footprints could be less compared to the Project. Regardless, since the building footprints for the Reduced Intensity Alternative is illustrative, to be conservative, it is assumed that all footprint-based impacts would be identical to the Project, as explained below. The construction period

associated with the Reduced Intensity Alternative would be comparatively shorter than the Project's construction period given the reduction in floor area to be constructed under this alternative.

Land Use

Impacts Not Evaluated in Detail. As with the Project, the Reduced Intensity Alternative would not physically disrupt/divide an established community or conflict with a HCP or NCCP. The Reduced Intensity Alternative would result in no impact to these topics. (NI)

Conflicts with Adopted City Land Use Plans and Policies with Regard to the Jobs/Housing Ratio. A goal of the City's General Plan policies is, in part, to reduce environmental impacts by promoting a balance in the jobs/housing ratio. The City's General Plan policies would facilitate this goal by promoting the construction of more housing in the relatively job-rich Silicon Valley, thereby helping to reduce long-distance commutes by employees to the Silicon Valley. However, employment growth associated with the Reduced Intensity Alternative would worsen the City and the County's jobs/housing imbalance, although to a lesser extent than the Project since fewer office jobs would be created. As with the Project, because this growth is not anticipated in the City's General Plan or accounted for in regional planning efforts, the likely result of the induced housing demand resulting from Reduced Intensity Alternative-generated jobs is upward pressure for additional housing units to be built in the City, the region, and possibly even outside of the region.

Compared to the Project, the Reduced Intensity Alternative would result in the same amount of residential uses as Scheme A (approximately 3,270 new residents) but fewer employees (approximately 10,030 fewer employees compared to Scheme A and 13,990 fewer employees compared to Scheme B). Although this alternative would have a much smaller effect on the jobs and housing balance than the Project (the Project with Scheme A would have a jobs-housing ratio of 18.1 compared to this alternative's jobs-housing ratio of 4.5), it would still worsen the jobs-housing ratio compared to existing conditions (the City's current jobs-housing ratio is somewhere between 2.4 and 2.6) and compared to what would result from the City's current General Plan (2.6). Without adequate housing within the City and other nearby Silicon Valley cities to accommodate job growth resulting from the Reduced Intensity Alternative, commute lengths to the new jobs would result in substantial transportation, air quality, and GHG impacts. Implementation of Mitigation Measure LU-1.1, as required for the Project, would help increase the housing stock within the City and improve the job/housing ratio, but because this mitigation measure relies on an iterative General Plan process, ultimately requiring approval from City Council, it cannot be stated with certainty whether or when the mitigation measure could be implemented. Nevertheless, despite mitigation measures designed to reduce environmental effects associated with an increase in vehicle miles traveled (VMT), impacts related to transportation, air quality, and GHG emissions remain significant and unavoidable under the Reduced Intensity Alternative, similar to the Project. (SU)

Conflicts with Airport Land Use Plan and City Policies Related to Airport Noise. As with the Project, the housing proposed at the southwest corner of Parcel 4 would be within the 65 dBA Community Noise Equivalent Level (CNEL) noise contour. According to SJC's CLUP noise policies, multi-family residential uses are "Generally Unacceptable" between the 65 and 70 dBA CNEL noise contours. Although Mitigation Measure NOI-1.3 (noise control plan to reduce interior noise at sensitive land uses) would reduce interior noise to acceptable levels, exterior noise levels would still be affected. Therefore, the Reduced Intensity Alternative, as with the Project, is inconsistent with the CLUP noise policies adopted with the intent to mitigate or avoid an environmental effect. This impact is significant and unavoidable. (SU)

Conflicts with Adopted City Land Use Plans and Policies (Other than Jobs/Housing Balance and Airport Noise). As with the Project, the Reduced Intensity Alternative would convert the existing Parks/Open Space land uses on-site to a new General Plan land use classification: the Urban Center/Entertainment District proposed within the Mixed-Use designation category. As with the Project, this land use change would allow for the office buildings, retail and entertainment facilities, residential units, hotel rooms, open spaces, new roadways and access points, and surface and structured parking facilities proposed under the Reduced Intensity Alternative. While the alternative would be inconsistent with the current Parks/Open Space land use designation, the General Plan Amendment, including the land use classification, would meet the intent of most of the land use policies in the General Plan. Although the alternative would result in some inconsistencies with the General Plan land use policies, similar to the Project, the ultimate determinations of General Plan consistency can and will be made by City Council. In addition, the ultimate finding of General Plan consistency does not require that a project be entirely consistent with each individual General Plan policy. A proposed project can be generally consistent with a general plan even though the project may not promote every applicable goal and policy. Because of the general consistency with land use policies, any potential conflicts with the General Plan related to the new land use classification under the Reduced Intensity Alternative would be less than significant, similar to the Project. (LTS)

Cumulative Impacts. The cumulative setting for the Reduced Intensity Alternative for land use and planning is the same as the Project. The Reduced Intensity Alternative would introduce a project with approximately 30 percent fewer employees than the Project. The cumulative projects considered are largely anticipated in regional plans and respective General Plans. However, the Project, as well as the Tasman East project, are not accounted for in regional growth projections. This analysis assumes that all other cumulative projects are assumed in their respective General Plans. Combined, the Reduced Intensity Alternative and the cumulative projects would result in inconsistencies with General Plan policies including those regarding consistency with General Plan build-out assumptions, consistency with the City's CAP, improving air quality, and reducing VMT. Even with a reduced level of development, the ratio of jobs to housing created by the Project would not change with the Reduced Intensity Alternative and, similar to the Project, the Reduced Intensity Alternative's contribution to the cumulative land use impact would be significant and unavoidable. (SU)

Aesthetics

Impacts Not Evaluated in Detail. As with the Project, the Reduced Intensity Alternative would not impact scenic resources along a State Scenic Highway or scenic vistas. The Reduced Intensity Alternative would result in no impact to these resources. (NI)

Degradation of Visual Character or Quality. Construction of the Reduced Intensity Alternative would result in similar changes to the existing visual character and quality of the Project site during construction as with the Project, although for a shorter construction period compared to the Project since the Reduced Intensity Alternative would result in less building area to be constructed. During the construction stage, there would be visual impacts within the 240-acre site from the demolition of existing buildings, the assembly of new structures at all parcels, construction of new roadways and access points, and equipment staging. The Reduced Intensity Alternative would include the same off-site components (i.e., off-site infrastructure improvements, vehicular access, bicycle/pedestrian circulation) as the Project. These off-site components, including the demolition of the existing Tasman East buildings and the potential replacement of Fire Station 10 at the existing Convention Center surface parking lot (Option 2), would result in the same construction impacts as the Project. Although construction associated with the Reduced Intensity Alternative on Parcels 1 and 2 would occur at a

lesser extent than compared to the Project, construction activities on these parcels would be most visible to Guadalupe River Trail users, a sensitive viewer group, resulting in potentially significant impacts. Mitigation Measure AES-1.1, which is required for the Project, would require soils from other parcels that are imported to Parcel 2 to be stored in areas that are not within view of the Guadalupe River Trail or distributed across Parcel 2 at a depth of 2 feet or less. Mitigation Measure AES-1.2, which is required for the Project, would require early implementation of a landscaping plan for Parcels 1 and 2. Implementation of Mitigation Measures AES-1.1 and AES-1.2 would result in less-than-significant impacts on viewers along the Guadalupe River Trail.

The Reduced Intensity Alternative would result in approximately 6.46 million gsf of building space compared to 9.16 million gsf under Project conditions. As such, there would be a net decrease in overall building area. Although some of the buildings would be slightly smaller in massing, scale, and height than for the Project, the increase of these building elements from existing conditions would make the Reduced Intensity Alternative more visible to surrounding areas than under current conditions, though less visible as compared to the Project. Similar to the Project, the Reduced Intensity Alternative would not represent a substantial degradation of visual quality and would not be a significant impact on visual character. From most locations, the viewers are not sensitive, and the increased development on the Project site would represent a small portion of the overall landscape. As with the Project, the new office, residential, hotel, and retail buildings under the Reduced Intensity Alternative would integrate with the surrounding visual character of the area. Therefore, the Reduced Intensity Alternative would have a less-than-significant impact on the overall existing visual character and quality during operation. (LTS/M)

New Sources of Light and Glare. As with the Project, the Reduced Intensity Alternative would add exterior lighting to an area where there currently is little to no lighting. Increased lighting at the site could also affect motorists traveling on State Route (SR) 237 or on major roads in the Project area, residents in the neighborhood to the south of Tasman Drive, and residents in the neighborhood to the east of the Guadalupe River in San José. The increase of building heights from existing conditions would make the building lights more visible to surrounding areas, though less visible than the Project due to a decrease in massing. The lighting performance standards set by Leadership in Energy and Environmental Design (LEED) would be followed through lighting specifications, shielding techniques, automatic lighting controls, and light pollution considerations. In addition, Mitigation Measure AES-2.1 and AES-2.2, as required for the Project, would require the installation of low-profile lighting and shielded fixtures, reducing the potentially significant lighting impact to less than significant.

As with the Project, the Reduced Intensity Alternative could also result in highly reflective surfaces at the Project site. Glare from these surfaces could create hazards to motorists along major road corridors, such as SR 237. However, since some buildings would be slightly smaller in mass, bulk, and height than the Project, there would be less building surface for glare to occur. Regardless, it is conservatively assumed that the Reduced Intensity Alternative would result in potentially significant impacts. Mitigation Measure AES-2.3, which is required for the Project, would treat reflective surfaces, resulting in less-than-significant impacts.

As with the Project, light and glare from vehicle headlights on the levels of the aboveground parking lot and garages could be a nuisance to motorists and occupants of the surrounding uses under the Reduced Intensity Alternative. The proposed parking structures could be visible to motorists traveling along SR 237, adjacent streets and from the adjacent development such as office uses and the Convention Center. Under the Reduced Intensity Alternative, there would be fewer parking structures compared to the Project. Further, some of the buildings would be slightly smaller in height than the Project, resulting in

less building surface for light spillover and glare to occur. Regardless, it is conservatively assumed that the Reduced Intensity Alternative would result in significant impacts. Mitigation Measure AES-2.4, which is required for the Project, would provide obstruction for glare from vehicle headlights in the proposed garages, resulting in less-than-significant impacts. (LTS/M)

Cumulative Impacts. The cumulative setting for the Reduced Intensity Alternative for aesthetic resources is the same as for the Project. The Reduced Intensity Alternative would introduce buildings of greater massing, scale, and height to the Project site over existing conditions, although at a slightly smaller scale than the Project due to the net decrease in overall building area. The Reduced Intensity Alternative and the cumulative projects would involve the redevelopment of an existing urban site and would be surrounded by similar types of existing development, thus enhancing the visual consistency of the surrounding setting of medium-scale office, industrial, hotel, and stadium development. Combined, the Reduced Intensity Alternative and the cumulative projects would provide increased unity with the existing and planned surroundings by creating contiguous landscape areas and buildings that reflect a similar architectural design. Therefore, as with the Project, the Reduced Intensity Alternative, together with cumulative projects, would not result in a substantial degradation of visual character or quality of the surroundings. In addition, because the cumulative projects would all involve redevelopment of an urban site that already generates light and glare and the land uses proposed are not anticipated to be particularly light intensive, development of the other projects in combination with the Reduced Intensity Alternative would not result in a significant change. As with the Project, the Reduced Intensity Alternative's cumulative impacts from nighttime lighting and glare would be less than significant. (LTS)

Transportation

Trip Generation. The transportation analysis in Section 3.3, *Transportation*, evaluated Scheme B, which generates more vehicle trips than Scheme A because of the increased amount of office space. Therefore, for purposes of this analysis, the Reduced Intensity Alternative is compared to Scheme B of the Project. The Reduced Intensity Alternative would reduce the building square footage by 30 percent compared to the Project, the resulting trip generation would be approximately 33 percent less than proposed under the Project. This is because office uses generate more trips and the Reduced Intensity Alternative focuses on reducing the office uses rather than retail, hotel, and residential uses. As shown in Table 5-6, the Reduced Intensity Alternative would result in 94,210 daily trips with a public transit reduction of 5 percent at Parcels 2, 4 (in Phases 2 and 3), and 5. Comparatively, the Project, Scheme B, would result in approximately 140,730 vehicle trips. Of the trips generated by the Reduced Intensity Alternative, 5,940 would occur in the AM Peak Hour (4,250 inbound and 1,680 outbound) and 7,490 would occur in the PM Peak Hour (2,980 inbound and 4,510 outbound).

Overall, the Reduced Intensity Alternative would have an increased number of daily vehicle trips and affected intersections compared to existing conditions, but approximately 33 percent fewer trips than the Project, Scheme B. Because of the reduction in the number of daily vehicle trips, the Reduced Intensity Alternative would result in fewer potential intersection impacts, as discussed in more detail below. The Reduced Intensity Alternative would moderately reduce impacts or reduce the severity of impacts by 20 to 50 percent for intersection level of service and freeway segment capacity. To reduce trip generation, this alternative would most likely require implementation of Mitigation Measure TRA-1.1, similar to the Project. Regardless, the Reduced Intensity Alternative would still result in significant and unavoidable impacts. (SU)

Table 5-6. Reduced Intensity Alternative Trip Generation (Net New)

	AM Peak Hour			PM Peak Hour			
	In	Out	Total	In	Out	Total	Daily
Parcel 1	490	60	550	100	430	530	5,250
Parcel 2	730	100	830	160	640	800	7,850
Parcel 3	530	70	600	120	460	580	5,660
Parcel 4	2,240	1,220	3,470	2,200	2,620	4,820	64,550
Parcel 5	400	290	690	530	520	1,050	14,870
Total without Public Transit Reduction	4,390	1,740	6,140	3,110	4,670	7,780	98,180
Total with Public Transit Reduction[a]	**4,250**	**1,680**	**5,940**	**2,980**	**4,510**	**7,490**	**94,210**

Source: Fehr & Peers 2015.

Note:

[a.] Public transit reductions can be applied only to certain areas of the Project site because of design and location. Therefore, a 5 percent public transit reduction is applied to Parcels 2, 4 (Phases 2 and 3), and 5.

Intersection Impacts. A 33 percent reduction in the Project would result in potentially fewer intersection impacts. Intersection analysis was performed at selected intersections to assess the relative impacts of the Reduced Intensity Alternative on the surrounding roadway network compared to the Project. The effects of the Reduced Intensity Project Alternative on the operations of 11 intersections near the Project site are evaluated under existing with-project conditions and background with-project conditions during the AM and PM peak hours, as follows:

- Existing with-Project Conditions: Existing conditions with traffic generated by the Project, taken from results from the transportation analysis in the EIR.
- Background with-Project Conditions: Background conditions with traffic generated by the Project, taken from results from the transportation analysis in the EIR.
- Existing with Reduced Intensity Alternative Conditions: Existing conditions with traffic generated by the Reduced Intensity Alternative.
- Background with Reduced Intensity Alternative Conditions: Background conditions with traffic generated by the Reduced Intensity Alternative.

As with the intersection analysis for the Project, the Valley Transportation Authority (VTA) Travel Demand Model was used to develop intersection forecasts. The proposed employees and residents at the Project site were input into the VTA model, and intersection forecasts were extracted.

The following intersections were analyzed (numbers correspond with the intersection identification numbers in Section 3.3, *Transportation*):

8. Great America Parkway/Tasman Drive
9. Convention Center/Tasman Drive
11. Centennial Boulevard/Tasman Drive
13. Calle Del Sol/Tasman Drive
14. Lick Mill Boulevard/Tasman Drive

57. Great America Parkway/SR 237 westbound ramps
59. Great America Parkway/Great America Way (Yerba Buena Way)
60. Great America Parkway/Old Mountain View-Alviso Road
84. Gold Street/Gold Street Collector
90. Lafayette Street/Calle De Luna
114. Calle Del Sol/Calle De Luna

The intersection delay and level-of-service results for the existing with Reduced Intensity Alternative Conditions are summarized in Table 5-7. This table also includes the results from the existing with-Project conditions. All of the intersections would operate with lower delays under the Reduced Intensity Alternative. As shown, several intersections would improve from operating unacceptably with the Project to operating acceptably with the alternative. Other intersections would still operate unacceptably but with less delay, making the impact of the Reduced Intensity Alternative less severe.

Table 5-7. Existing with Reduced Intensity Alternative Intersection Analysis Results

		Existing with Project		Existing with Reduced Intensity Alternative	
Intersection	Peak Hour	Delay	LOS	Delay	LOS
8. Great America Parkway/Tasman Drive (CMP)	AM	34.1	C	29.1	C
	PM	**171.2**	**F**	**85.3**	**F**
9. Convention Center/Tasman Drive	AM	18.2	B	17.6	B
	PM	**157.3**	**F**	**58.9**	**E**
11. Centennial Boulevard/Tasman Drive	AM	52.9	D	29.7	C
	PM	**134.7**	**F**	46.1	D
13. Calle Del Sol/Tasman Drive	AM	12.0	B	10.4	B
	PM	38.2	D	19.8	B
14. Lick Mill Boulevard/Tasman Drive	AM	**57.7**	**E**	27.6	C
	PM	**>180**	**F**	**88.2**	**F**
57. Great America Parkway/SR 237 Westbound Ramps (CMP)	AM	**116.5**	**F**	**80.7**	**F**
	PM	55.3	E	24.8	C
59. Great America Parkway/Great America Way (Yerba Buena Way)	AM	**120.5**	**F**	52.9	D
	PM	**70.8**	**E**	37.6	D
60. Great America Parkway/Old Mountain View-Alviso Road	AM	**83.1**	**F**	33.5	C
	PM	48.9	D	39.2	D
84. Gold Street/Gold Street Collector	AM	**113.8**	**F**	29.2	C
	PM	29.8	C	24.5	C
90. Lafayette Street/Calle De Luna	AM	34.9	C	16.7	B
	PM	22.6	C	18.6	B
114. Calle Del Sol/Calle De Luna	AM	23.4	C	16.0	C
	PM	31.5	D	22.4	C

Source: Fehr & Peers 2015.
Notes:
Bold text indicates intersection operates at a deficient level of service.

The intersection delay and level-of-service results for the background with Reduced Intensity Alternative conditions are summarized below in Table 5-8. This table also includes the results from the background with-project conditions. As with the existing with Reduced Intensity Alternative conditions scenario, several intersections would improve from operating unacceptably under background with-project conditions to operating acceptably with this alternative. Other intersections would still operate unacceptably with the Reduced Intensity Alternative but would operate better than with the Project, making the impact of the alternative less severe.

Table 5-8. Background with Reduced Intensity Alternative Intersection Analysis Results

		Existing with Project		Existing with Reduced Intensity Alternative	
Intersection	Peak Hour	Delay	LOS	Delay	LOS
8. Great America Parkway/Tasman Drive (CMP)	AM	**89.9**	**F**	73.2	E
	PM	**> 180**	**F**	**157.6**	**F**
9. Convention Center/Tasman Drive	AM	46.0	D	33.1	C
	PM	**120.7**	**F**	36.6	D
11. Centennial Boulevard/Tasman Drive	AM	**110.3**	**F**	**70.6**	**E**
	PM	**> 180**	**F**	**77.7**	**E**
13. Calle Del Sol/Tasman Drive	AM	46.7	D	17.1	B
	PM	**68.8**	**E**	33.0	C
14. Lick Mill Boulevard/Tasman Drive	AM	**92.8**	**F**	33.0	C
	PM	**148.3**	**F**	**68.7**	**E**
57. Great America Parkway/SR 237 Westbound Ramps (CMP)	AM	**104.7**	**F**	79.5	E
	PM	72.8	E	28.2	C
59. Great America Parkway/Great America Way (Yerba Buena Way)	AM	**123.1**	**F**	**62.8**	**E**
	PM	**139.3**	**F**	**77.3**	**E**
60. Great America Parkway/Old Mountain View-Alviso Road	AM	**91.6**	**F**	47.3	D
	PM	**112.2**	**F**	**89.9**	**F**
84. Gold Street/Gold Street Collector	AM	**115.8**	**F**	31.0	C
	PM	34.4	C	25.5	C
90. Lafayette Street/Calle De Luna	AM	**70.3**	**E**	18.8	B
	PM	24.4	C	18.7	B
114. Calle Del Sol/Calle De Luna	AM	32.0	D	18.8	C
	PM	**74.4**	**F**	29.3	D

Source: Fehr & Peers 2015.
Notes:
Bold text indicates intersection operates at a deficient level of service.

Fewer intersections would have significant impacts under the Reduced Intensity Alternative because of the reduced trip generation. In addition, for several intersections, the impact is not as severe and can either be fully or partially mitigated, which is not possible for the Project. Table 5-9, below, summarizes the impact findings.

Table 5-9. Significant Intersection Impact Comparison

Intersection	Existing with Project		Background with Project	
	Project	Alternative	Project	Alternative
8. Great America Parkway/Tasman Drive (CMP)	Yes	Yes	Yes	Yes
9. Convention Center/Tasman Drive	Yes	Yes	Yes	No
11. Centennial Boulevard/Tasman Drive	Yes	No	Yes	Yes
13. Calle Del Sol/Tasman Drive	No	No	Yes	No
14. Lick Mill Boulevard/Tasman Drive	Yes	Yes	Yes	Yes
57. Great America Parkway/SR 237 Westbound Ramps (CMP)	Yes	Yes	Yes	No
59. Great America Parkway/Great America Way (Yerba Buena Way)	Yes	No	Yes	Yes
60. Great America Parkway/Old Mountain View-Alviso Road	Yes	No	Yes	Yes
84. Gold Street/Gold Street Collector	Yes	No	Yes	No
90. Lafayette Street/Calle De Luna	No	No	Yes	No
114. Calle Del Sol/Calle De Luna	No	No	Yes	No

Source: Fehr & Peers 2015.

As summarized in Table 5-9, the Reduced Intensity Alternative would result in four fewer intersections with significant impacts under existing conditions and six fewer intersections with significant impacts under background conditions. Moreover, the significant impacts with the Reduced Intensity Alternative would be less severe than with the Project because the added delay would be less.

Table 5-10 summarizes the mitigation measures for the intersections with significant impacts under existing conditions and the levels of service before and after mitigation. Mitigation measures for the Project are also presented. Because impacts are eliminated or reduced with the Reduced Intensity Alternative, several of the mitigation measures are reduced in scope because of the lesser impact.

The Reduced Intensity Alternative would generate approximately 40 percent fewer peak-hour vehicle trips than the Project analyzed in the EIR. Therefore, the impacts of the Reduced Intensity Alternative are generally not as severe. Significant impacts on four intersections under existing conditions and six intersections under background conditions would be eliminated with the Reduced Intensity Alternative. Most of the remaining intersections would either be mitigated to a less-than-significant level with the same mitigation measure proposed for the Project or, at a few locations, with a measure that does not require right-of-way. A total of three locations (Convention Center/ Tasman Drive, Great America Parkway/Tasman Drive (CMP), and Centennial Boulevard/ Tasman Drive) would retain significant and unavoidable impacts. (SU)

Table 5-10. Mitigation Measures for Existing with Reduced Intensity Conditions and Background with Reduced Intensity Conditions

	Mitigation Measure With Project	Mitigation Measure with Alternative	Peak Hour	Before Mitigation Delay	Before Mitigation LOS	After Mitigation Delay	After Mitigation LOS
Existing With Reduced Intensity Conditions							
8. Great America Parkway/Tasman Drive (CMP)	*Partial Mitigation:* Add a southbound right-turn lane and add a third westbound left-turn lane.	*Full Mitigation:* Add a southbound right-turn lane	AM	29.1	C	N/A	N/A
			PM	**85.3**	**F**	66.4	E
9. Convention Center/ Tasman Drive	No feasible mitigation (no right-of-way is available).	No feasible mitigation (no right-of-way is available).[a]	AM	17.6	B	N/A	N/A
			PM	**58.9**	**E**	N/A	N/A
14. Lick Mill Boulevard/ Tasman Drive	*Partial Mitigation:* Reconfigure northbound and southbound approaches to two left-turn lanes, one through lane, and one right-turn lane; change northbound/southbound split phasing to protected phasing; add a second westbound left-turn lane.	*Full Mitigation:* Reconfigure northbound and southbound approaches to two left-turn lanes, one through lane, and one right-turn lane; change northbound/southbound split phasing to protected phasing.	AM	27.6	C	N/A	N/A
			PM	**88.2**	**F**	52.5	D
57. Great America Parkway/SR 237 Westbound Ramps (CMP)	*Full mitigation:* Add third westbound left-turn lane and associated receiving lane under underpass. Add a second westbound right-turn lane.	*Full mitigation:* Add third westbound left-turn lane and associated receiving lane under underpass.	AM	**80.7**	**F**	37.5	D
			PM	24.8	C	N/A	N/A
Background With Reduced Intensity Conditions							
8. Great America Parkway/ Tasman Drive (CMP)	*Partial Mitigation:* Add a southbound right-turn lane and add a third westbound left-turn lane.	*Partial Mitigation:* Add a southbound right-turn lane and add a third westbound left-turn lane.[a]	AM	73.2	E	N/A	N/A
			PM	**157.6**	**F**	**98.9**	**F**
11. Centennial Boulevard/ Tasman Drive	No feasible mitigation (no right-of-way is available).	No feasible mitigation (No right-of-way is available).[a]	AM	**70.6**	**E**	N/A	N/A
			PM	**77.7**	**E**	N/A	N/A
14. Lick Mill Boulevard/ Tasman Drive	*Partial Mitigation:* Reconfigure northbound and southbound approaches to two left-turn lanes, one through lane, and one right-turn lane; change northbound/southbound split phasing to protected phasing; add a second westbound left-turn lane.	*Full Mitigation:* Reconfigure northbound and southbound approaches to two left-turn lanes, one through lane, and one right-turn lane.; change northbound/southbound split phasing to protected phasing.	AM	33.0	C	N/A	N/A
			PM	**68.7**	**E**	44.0	D

Table 5-10. Mitigation Measures for Existing with Reduced Intensity Conditions and Background with Reduced Intensity Conditions

	Mitigation Measure With Project	Mitigation Measure with Alternative	Peak Hour	Before Mitigation		After Mitigation	
				Delay	LOS	Delay	LOS
59. Great America Parkway/ Great America Way (Yerba Buena Way)	*Partial Mitigation:* Add a second westbound right-turn lane with an overlap phase and a second southbound left-turn lane.	*Full Mitigation:* Add a second southbound left-turn lane; add an overlap phase to the westbound-right-turn movement.	AM	**62.8**	**E**	43.9	D
			PM	**77.3**	**E**	36.4	D
60. Great America Parkway/ Old Mountain View-Alviso Road	*Partial Mitigation:* Add a second eastbound left-turn lane.	*Full Mitigation:* add a second eastbound left-turn lane.	AM	47.3	D	N/A	N/A
			PM	**89.9**	**F**	36.5	D

Source: Fehr & Peers 2015.

Notes:

Bold text indicates intersection operates at a deficient level of service.

[a.] Mitigation measures for the Reduced Intensity Alternative would no reduce impacts to less than significant. At these intersections, like the Project, the impacts would remain significant and unavoidable.

Bicycles, Pedestrians, and Transit. The site plan for the Reduced Intensity Alternative would largely be similar to the site plan for the Project. Therefore, it is assumed that the Reduced Intensity Alternative would include the same bicycle and pedestrian circulation improvements as the Project. As such, no significant impacts on bicycles are anticipated with this alternative. However, the significant and unavoidable pedestrian impact due to the sidewalk gap on Tasman Drive between Lafayette Street and Calle Del Sol would remain.

No significant impacts on transit are anticipated. The Project did not have a significant impact on transit vehicle capacity, and with lower trip generation, the Reduced Intensity Alternative would result in lower transit ridership. Impacts on the transit system, bicycle facilities, and pedestrian facilities would be similar to the impacts from the Project. (SU)

Air Quality

Conflict with Air Quality Plan. The Reduced Intensity Alternative would construct 6.46 million gsf of building area, resulting in approximately 3,270 new residents and 14,740 new net employees. The proposed development under the Reduced Intensity Alternative would result in similar land uses as the Project, but total development is less due to a reduction in office uses (3.02 million gsf) relative to the Project (5.72 million gsf). All other land uses would have the same amount of area as proposed under Scheme A. The Reduced Intensity Alternative would also include the same off-site infrastructure improvements, vehicular access, and bicycle/pedestrian circulation improvements as the Project. The Project includes several transportation and energy conservation strategies consistent with local-, regional-, and statewide plans to reduce emissions. However, similar to the Project, the Reduced Intensity Alternative would require a General Plan Amendment to create a new land use designation and would contribute unplanned regional growth. Similar to the Project, the Reduced Intensity Alternative would conflict with regional air quality plans. Therefore, impacts are considered significant and unavoidable. (SU)

Construction Criteria Air Pollutant Emissions. The Reduced Intensity Alternative would result in 30 percent less building area than the Project, which would likely result in a shorter construction period. However, in order to maintain a shorter construction period, it is likely that the daily construction activities under the Reduced Intensity Alternative would be similar to the Project. Therefore, daily average construction emissions generated by the Reduced Intensity Alternative would most likely be similar to those of the Project but with a shorter duration overall. Similar to the Project, development of the Reduced Intensity Alternative would likely exceed the BAAQMD's significance thresholds during construction. Because daily average emissions would most likely be similar to those of the Project, similar mitigation would be required.

The construction of the Project would most likely generate daily average exhaust emissions of nitrous oxides (NO_X) in exceedance of the BAAQMD significance threshold. The Reduced Intensity Alternative would most likely generate similar levels of average daily NO_X emissions in exceedance of the BAAQMD threshold. Similar to the Project, implementation of Mitigation Measures AQ-2.1 through AQ-2.4 would reduce the impact and would bring daily NO_X emissions below the BAAQMD threshold. Therefore, with implementation of Mitigation Measures AQ-2.1 through AQ-2.4, this impact would reduce impacts to a less-than-significant level. (LTS/M)

Operational Criteria Air Pollutant Emissions Similar to the Project, operation has the potential to create air quality impacts primarily associated with mobile and area sources. Motor vehicle traffic would include daily employee trips, visitor trips, vender delivery trucks, and waste management trucks. Since the Reduced Intensity Alternative would result in fewer vehicle trips due to the reduction in building

space and employees, the operational air quality impacts would be reduced. As discussed in the alternatives traffic analysis, ADT associated with the Reduced Intensity Alternative would be 94,210, which is 67 percent of the daily trips of the Project (Scheme B). On a gross square footage basis, the Reduced Intensity Alternative would result in approximately 70 percent of the build-out of the Project.

Scaling down from the operational daily emissions of the Project by gross square footage or by daily trips, the operational criteria-pollutant mitigated emissions (including Mitigation Measures GHG-2 and TRA-1.1) of the Reduced Intensity Alternative would exceed BAAQMD thresholds for reactive organic gases (ROG), NO_X, Particulate Matter (PM), which consists of PM less than or equal to 10 microns in diameter (PM10) and PM less than or equal to 2.5 microns in diameter (PM2.5). Although this alternative's criteria-pollutant emissions would be substantially less than those of the Project, they would still be significant. Similar to the Project, mitigation measures related to GHG (GHG-1.1) and transportation (TRA-1.1) would reduce the impact but not to below the BAAQMD thresholds, and operational emissions would be significant and unavoidable. (SU)

Generation of Regional Criteria Pollutant Emissions during Combined Project Construction and Operation. Similar to the Project, construction of the Reduced Intensity Alternative would occur in phases, with certain areas beginning to operate while other areas are under construction. Similar to the Project, implementation of Mitigation Measures AQ-2.1 through AQ-2.4 and GHG-1.1 would reduce construction emissions, and Mitigation Measures GHG-1.2 and TRA-1.1 would reduce operational emissions associated with the Reduced Intensity Alternative, but not below the BAAQMD thresholds. (SU)

Exposure of Sensitive Receptors to Carbon Monoxide Hot-spots. Traffic generated by the Project would have the potential to create carbon monoxide (CO) hot spots at nearby roadways and intersections. However, because the Reduced Intensity Alternative would generate less traffic than the Project, the CO emissions would be less than what is anticipated for the Project because traffic volumes would be far below the congested traffic volume modeled by the BAAQMD. Regardless, for both the Project and the Reduced Intensity Alternative, CO concentrations are not expected to contribute to any new localized violations of the 1-hour or 8-hour ambient air quality standards, resulting in less-than-significant impacts. (LTS)

Construction TAC Emissions. Diesel-fueled engines, which generate PM 2.5 and DPM, would be used during construction of the Reduced Intensity Alternative, similar to the Project. Multiple sensitive receptors are located both within 1,000 feet of the Project site, including single-family residences in each direction as well as various parks, places of assembly, and schools near the Project site. Additionally, new receptors would occupy the Project area while subsequent phases of construction would occur. Construction of the Reduced Intensity Alternative would result in less construction in a shorter period of time, thus reducing the amount of emissions and duration of exposure compared to the Project. When scaled based on square footage, unmitigated Project construction would not result in significant increases in annual PM2.5 concentrations at sensitive receptors, however some on-site sensitive receptors could be exposed to DPM resulting in cancer risks above BAAQMD cancer threshold. Similar to the Project, Mitigation Measures AQ-2.1, AQ-2.2, and AQ-2.3 reduces DPM emissions from construction equipment, while Mitigation Measure AQ-6.1 includes installation of particulate filtration systems at residences and daycare centers on-site, as necessary. Similar to the Project, implementation of feasible mitigation would reduce impacts to a level below significance, and the magnitude of this impact would be less given the reduced construction and shorter exposure duration. Therefore, with mitigation, this impact would be less than significant. (LTS/M)

Operational TAC Emissions. The Reduced Intensity Alternative operations would also result in vehicular TAC emissions that could affect sensitive receptors along off-site roadways affected by the Project. Scaling based on square footage from the Project's emission impacts, this alternative would not result in exposure of sensitive receptors in exceedance of BAAQMD TAC thresholds. Operation of this alternative would also result in exposure of on-site sensitive receptors to periodic TAC emissions from energy generator operations and loading dock truck emissions. Scaling based on square footage from the Project's emission impacts, this alternative would not result in exposure of sensitive receptors in exceedance of BAAQMD TAC thresholds. (LTS)

This alternative would result in exposure of new residential and daycare receptors to existing TAC emissions, which, like the Project, could be significant. Mitigation Measure AQ-7.1 would be required to provide filtration for HVAC systems that serve on-site residences and daycare centers that are exposed to TAC impacts that exceed BAAQMD project-level thresholds and would mitigate impacts to a less-than-significant level. (LTS/M)

Exposure of Sensitive Receptors to Asbestos During Construction. Asbestos is a naturally-occurring mineral that was previously used in building construction due to its heat resistance and strong insulating properties. As with the Project, asbestos impacts could occur if demolition of existing buildings containing asbestos or disturbance of any features exposes workers. The Reduced Intensity Alternative would comply with BAAQMD Regulation 11, Rule 2, which will control emissions of asbestos to the atmosphere during demolition activities. Accordingly, this impact would be less than significant. (LTS)

Objectionable Odors. Similar to the Project, potential odor sources from Reduced Intensity Alternative construction include diesel exhaust from heavy-duty equipment, landfill off-gassing during excavating and regrading, diesel exhaust from weekly trash pick-up, and the use of architectural coatings during routine maintenance; limited odors may also result from residential cooking appliances during operations. Construction operations (other than landfill disturbance) and operational odors are routine and limited; impacts would be less than significant. Potential odors from disturbance of landfill would be less than the Project because the footprint of construction is smaller. Mitigation Measure HAZ-2.1 would ensure construction activities do not result in nuisance odors. Accordingly, this would be less-than-significant (LTS/M).

Cumulative Impacts. This alternative would result in less criteria air pollutants than the Project, but would still contribute considerably to significant cumulative regional air pollutant levels. (SU)

This alternative would result in TAC emissions that would contribute to cumulative TAC exposure to on-site and off-site sensitive receptors. The amount of TAC emissions would be less than the Project under this alternative. For on-site receptors, the cumulative exposure would be less than BAAQMD cumulative thresholds. For off-site receptors, scaling using square footage and taking into account the non-project cumulative TAC emissions, this alternative would still have a cumulative impact to certain off-site residential receptors but would not result in a cumulative impact to off-site school or park receptors. Like the Project, no feasible mitigation has been identified that would eliminate the significant cumulative impact to certain off-site receptors, but the alternative's contribution to this impact (12 percent) is less than the Proposed Project's contribution (16 percent). (SU)

Greenhouse Gas Emissions

Greenhouse Gas. Although the construction period could be shorter for this alternative because of less building area, the intensity of construction activities at a given time would be similar to that of the Project. Construction of the Reduced Intensity Alternative would consequently generate GHG emissions

from mobile and stationary construction equipment exhaust, as well as employee and haul truck vehicle exhaust. Indirect emissions would be generated from water use for fugitive dust control.

BAAQMD's CEQA Guidelines do not recommend a GHG emission threshold for construction-related emissions. However, the BAAQMD does recommend implementation of best management practices (BMPs) to help control and reduce GHG emissions. The GHG impacts of construction of the Reduced Intensity will be less than significant with implementation of these BMPs (as required by Mitigation Measure GHG-1.1). (LTS/M)

Operation of the Reduced Intensity Alternative would generate fewer direct and indirect GHG emissions than the Project due to a decrease in building area and employees, resulting in 33 percent less ADT than the Project and 30 percent less gross square footage. As a result, annual direct and indirect GHG emissions would be reduced relative to the Project. However, the Reduced Intensity Alternative would still generate an increase in direct and indirect GHG emissions over existing conditions. Similar to the Project, implementation of Mitigation Measures GHG-1.2 and TRA-1.1 would reduce operational GHG emissions associated with the Reduced Intensity Alternative. Based on mitigated operational GHG emissions by square footage or daily trip generation, GHG emissions for the Reduced Intensity Alternative would be 67 to 70 percent of those for the Project and would not exceed the BAAQMD AB 32–based significance threshold for 2020 but would exceed the substantial progress efficiency metric established for 2030. Therefore, even after implementation of Mitigation Measures GHG-1.1 and TRA-1.1, this impact would remain significant and unavoidable. (SU)

Conflicts with Applicable Plans and Policies. Operation of the Reduced Intensity Alternative would be required to implement all applicable measures in the City's CAP as well as measures to address long-term GHG reductions, beyond those necessary to meet the BAAQMD AB 32–based thresholds for 2020. With implementation of Mitigation Measures GHG-1.2 and TRA-1.1, this alternative would implement GHG reduction measures that would facilitate accomplishment of long-term State goals, as articulated in Executive Orders B-30-15 and S-03-05 (along with federal and State reduction efforts). Relative to plan and policy consistency, the alternative's impact would be less than significant. (LTS)

Noise

Impacts Not Evaluated in Detail. The area sited for development with the Project is the same as the general area sited for development under the Reduced Intensity Alternative; this site is not located in the vicinity of a private airstrip and would not expose people to excessive aircraft noise from a private airstrip. There would be no impact, and no mitigation is required. (NI)

Construction Impacts. The Reduced Intensity Alternative would include a 30 percent reduction in the amount of floor area for office uses. Overall, the intensity and location of construction under this alternative would be very similar to that of the Project, as this alternative would involve the same types of construction equipment and similar worst-case distances to noise sensitive land uses as the Project. As with the Project, the impact related to construction noise and vibration for the Reduced Intensity Alternative would be potentially significant. Implementation of Mitigation Measures NOI-1.1 (construction noise control plan) and NOI-2.1 (pile-driving restrictions), however, would reduce construction noise and vibration impacts to less-than-significant levels. (LTS/M)

Traffic Noise Impacts on Off-Site Receptors. The development of the Reduced Intensity Alternative would result in an increase in vehicle trips and employment growth as compared to existing conditions, which would lead to an increase in traffic in the vicinity of the Project site. This alternative is estimated to generate up to 94,210 ADT as compared to the Project's worst-case scenario of up to 140,730 ADT

(with Scheme B development). Because the Reduced Intensity Alternative would only generate 70 percent of the total vehicle trips generated by the Project (a 30 percent reduction), the associated traffic noise would increase slightly less with this alternative than with the Project. As explained in Section 3.6, *Noise*, the Project would result in significant impacts related to traffic noise along a roadway segment if the resulting traffic noise level exceeds the applicable land use compatibility standard for the adjacent land use (55 L_{dn} for residential uses and 65 L_{dn} for commercial uses) and the project-related increase is 3 dBA or greater. The Project would result in a significant noise impact only along one roadway segment (Lafayette Street between Tasman Drive and Hogan Drive) since the noise level would increase by 3 dBA. Since the Reduced Intensity Alternative would result in 30 percent less traffic than the Project, this noise level increase along the roadway segment is expected to be less than the Project. Therefore, this alternative would not exceed the threshold, resulting in a less-than-significant impact, compared to a significant and unavoidable impact with implementation of the Project. (LTS)

Roadway/Rail Noise and Vibration Impacts on On-site Receptors. With regard to rail noise, proposed development areas associated with the Reduced Intensity Alternative (specifically, the residential land uses located in the eastern portion of Parcel 5) appear to be located as close to the UPRR (rail) tracks, the light rail tracks, Tasman Drive, and Lafayette Street as they would be under the Project (refer to Figure 5-1); accordingly, impacts related to roadway and rail noise would be the same under this alternative as with Project implementation. Noise impacts related to rail noise would be significant for this alternative. Implementation of Mitigation Measure NOI-1.3 (noise control plan to reduce interior noise at sensitive land uses) would reduce noise impacts from UPRR noise and light-rail noise to a less-than-significant level. (LTS/M)

Similarly, and as with the Project, impacts related to ground-borne vibration from the UPRR tracks would be conservatively assessed as potentially significant for the podium residential land uses proposed in the eastern portion of Parcel 5. Implementation of Mitigation Measure NOI-2.2 (vibration control plan to reduce rail vibration at sensitive land uses) would reduce this impact to a less-than-significant level. (LTS/M)

Operational Noise Impacts from Stationary Sources. As with the Project, the Reduced Intensity Alternative would locate commercial uses adjacent to residential uses; stationary sources associated with commercial uses could result in noise levels in excess of the City's exterior noise limits. Noise impacts associated with the exposure of new residences to stationary sources of noise is therefore significant with the Reduced Intensity Alternative. Implementation of Mitigation Measure NOI-1.3 would ensure that potential noise impacts would be addressed through design (i.e., enclosures around noise-generating equipment, setbacks to maximize distance to residences, and noise-reducing treatments in new buildings) and would reduce this impact to a less-than-significant level. (LTS/M)

New residences and hotel occupants living at the Reduced Intensity Alternative site would also be exposed to elevated noise levels from stadium events. Noise from the stadium would occur at an elevation higher than the ground level. Therefore, it would not be feasible to mitigate noise from the stadium at outdoor residential areas using sound walls, and the only feasible mitigation would be the building acoustical treatments included in Mitigation Measure NOI-1.3. As with the Project, operational, noise impacts during stadium events would remain significant and unavoidable even with mitigation. (SU)

Impacts on On-site Receptors from Public Use Airports. The Project area would be roughly the same for the Reduced Intensity Alternative as the Project, and would also be located 2.7 miles from SJC. Although this is more than two miles from the airport, the Project area is included in the CLUP for the airport. Policy N-4, included in the Regulatory Setting in *3.6 Noise*, indicates that residential construction

is not permitted within the 65 dB CNEL contour boundary unless it can be demonstrated that interior noise levels will be less than 45 dB CNEL and that there would be no outdoor residential activities areas. This impact would be potentially significant. Implementation of Mitigation Measure NOI-1.3 would reduce interior noise levels to 45 dB CNEL or less. However, it will most likely not be possible to reduce the noise levels at outdoor residential areas from aircraft overflights to less than 65 dB CNEL. This impact is significant and unavoidable. (SU)

Cumulative Impacts. As discussed in Section 3.6, *Noise*, cumulative impacts related to construction noise and vibration, as well as stationary source operational noise (HVAC, etc.) would be less than significant with the implementation of Mitigation Measures NOI-1.1, NOI-1.3, NOI-2.1, and NOI-2.2. (LTS/M)

With regard to traffic noise effects, future regional growth to be developed within the Project vicinity would result in increases in traffic that would cumulatively increase traffic noise. Even with the 30 percent reduction from Project traffic volumes that would occur with the Reduced Intensity Alternative, cumulative Year 2040 traffic noise levels in the vicinity of the Project would be substantially increased (i.e., an increase in noise greater than 3 dBA L_{dn}) above existing traffic noise levels without the Project. Additionally, implementation of the Reduced Intensity Alternative would likely make a cumulatively considerable contribution by contributing more than 1 dBA L_{dn} or more to the overall traffic noise level increase. Therefore, the Project would have a cumulatively considerable contribution to a cumulative traffic noise impact. Implementation of Mitigation Measure NOI-1.2 would reduce the noise levels along the impacted roadway segments; however, implementation of this mitigation measure may not be feasible. Therefore, the Reduced Intensity Alternative's contribution to the cumulative traffic noise impact would remain cumulatively considerable. (SU)

Cultural Resources

Impacts Not Evaluated in Detail. As with the Project, the Reduced Intensity Alternative would not cause a substantial adverse change in the significance of a historic structure because none of the existing buildings on-site are considered historic. Therefore, the Reduced Intensity Alternative would result in no impact to historic structures. (NI)

Impacts on Archaeological Resources. The presence of prehistoric archaeological sites in the Project vicinity suggests that there could be additional, previously undiscovered prehistoric archaeological resources in the Project area that could be affected by ground-disturbing activities. Accordingly, ground-disturbing activities during construction of the Reduced Intensity Alternative has the potential to encounter previously undiscovered archaeological resources. However, as with the Project, implementation of Mitigation Measures CR-1.1, CR-1.2, and CR-1.3 would reduce this impact to a less-than-significant level. (LTS/M)

Impacts on Paleontological Resources. The Reduced Intensity Alternative has the potential to directly or indirectly destroy a unique paleontological resource or site or unique geologic feature. Impacts on paleontological resources would depend on the depth, extent, and type of soil-disturbing activities that may occur as a result of construction, as well as the paleontological sensitivity of the materials underlying the site. Construction activities under the Reduced Intensity Alternative would be similar to the Project. Accordingly, this alternative could expose undisturbed deposits that may contain fossils, resulting in a potentially significant impact. However, Mitigation Measures CR-2.1, CR-2.2, and CR-2.3, as required for the Project, would reduce this impact to a less-than-significant level. (LTS/M)

Impacts on Human Remains. Although the Northwest Information Center background records search did not identify any human remains on the Project site, at least one human burial has been identified

within 0.5 mile of the Project site. Therefore, the potential may exist for previously undiscovered human remains to be encountered during construction of the Reduced Intensity Alternative. However, Mitigation Measure CR-3.1, required for the Project, would reduce this impact to a less-than-significant level. (LTS/M)

Cumulative Impacts. Because all historical resources are unique and nonrenewable members of finite classes, all adverse effects or negative impacts erode a dwindling resource base. For this reason, the cumulative effects of development in the region on historical resources are considered significant. However, since the existing buildings at the Project site are not considered historic, the Reduced Intensity Alternative would not contribute to any potential cumulative impact on historical resources. Given that known prehistoric resources have been identified within 0.5 mile of the Project site, there is the possibility that previously undiscovered archaeological resources, paleontological resources, and human remains could be encountered during construction. All significant archaeological resources, paleontological resources, and human remains are unique and nonrenewable resources. Therefore, the cumulative effects of all development on these resources are considered potentially significant. However, compliance with Mitigation Measures CR-1.1, CR-1.2, CR-1.3, CR-2.1, CR-2.2, CR-2.3, and CR-3.1 would lessen the Reduced Intensity Alternative's contribution to the cumulative impact to less than cumulatively considerable and would reduce the potentially significant cumulative impacts associated with the loss of archaeological and paleontological resources and the disturbance of human remains to a less-than-significant level, similar to the cumulative impacts of the Project. (LTS/M)

Biological Resources

Impacts Not Evaluated in Detail. As with the Project, the Reduced Intensity Alternative would not result in the direct loss of or damage to special-status plants, potentially interfere with migration routes or nursery sites for common species, or conflict with a HCP or NCCP. The Reduced Intensity Alternative would result in no impact related to these issues. (NI)

Interference with Movement of Native Migratory Wildlife Species. Existing shrubs and trees on the Project site could provide nesting habitat for a variety of migratory birds. As with the Project, the Reduced Intensity Alternative would demolish existing buildings at the Project site, remove existing landscaping, and develop the site with new buildings and landscaping. If nesting migratory birds are present, tree and shrub removal associated with the Reduced Intensity Alternative could result in the loss of those migratory birds caused by direct mortality of adult or young birds, nest destruction, or disturbance of nesting native migratory bird species. However, Mitigation Measure BIO-1.1, required for the Project and also applicable for this alternative, would prohibit vegetation removal during the nesting season and establish a no-disturbance buffer around active nests if discovered.

The Reduced Intensity Alternative would also introduce buildings with greater mass, scale, and height to the Project site as compared to the existing on-site structures. Injury or death to birds could result from collisions with these buildings due to transparent or reflective glass and from lighting at the Project site, which could misdirect or confuse birds during flight. Whereas the Project would introduce buildings up to approximately 17 stories, the Reduced Intensity Alternative buildings would likely be shorter in height and there would be less building surface for collisions to occur than compared to the Project. Regardless, it is conservatively assumed that the Reduced Intensity Alternative could be constructed up to the maximum height permitted and would result in significant impacts to migratory birds. Mitigation Measure BIO-1.2, required for the Project, would involve implementing bird-safe design standards into building and lighting design. However, as with the Project, it is unknown whether Mitigation Measure BIO-1.2 would be sufficient to mitigate impacts related to bird collisions. As such, this impact is

considered significant and unavoidable, although to a lesser extent than the Project since fewer buildings would be constructed or the building heights would be shorter. (SU)

Impacts on Special-Status Species – Burrowing Owls. The land cover types on the Project site that provide habitat for burrowing owls include annual grassland and ruderal land cover types. Although no nesting burrowing owls were observed on the Project site, the presence of nesting burrowing owls in the vicinity of the Project site (less than 1 mile away) and the use of habitat on the Project site in the past suggests the possibility that burrowing owls could move back onto the Project site at some point in the future, prior to development, and begin nesting. In this situation, as with the Project, development of the Reduced Intensity Alternative would result in the loss of occupied burrowing owl nesting habitat and potentially the direct loss of burrowing owls or their nests. Mitigation Measures BIO-2.1 and BIO-2.2, as required for the Project and applicable to this alternative, would involve burrowing owls detection surveys, avoidance during the nesting season, relocation where applicable, and replacement of burrowing owl habitat. As with the Project, the Reduced Intensity Alternative would result in less-than-significant impacts with implementation of these mitigation measures. (LTS/M)

Impacts on Special-Status Species – Western Pond Turtles. Suitable habitat for the western pond turtle on and adjacent to the Project site includes the retention pond and drainage swale on the northern part of the site, the ponds within the golf course, San Tomas Aquino Creek, and the Guadalupe River. As with the Project, if western pond turtles are present in the aquatic habitat within the construction footprint of the Reduced Intensity Alternative, they could be injured or killed inadvertently by equipment used during the construction period. Mitigation Measure BIO-3.1, as required for the Project and applicable to this alternative, would involve preconstruction surveys and establishing buffer zones for the western pond turtle. As with the Project, the Reduced Intensity Alternative would result in less-than-significant impacts with implementation of this mitigation measure. (LTS/M)

Impacts on Special-Status Fish Species and Critical Habitat. Special-status fish species are present in the Guadalupe River reach adjacent to the Project site when flows are high enough to provide adequate passage. Steelhead and Chinook salmon use the Guadalupe River as a migratory route to upstream spawning habitat. Critical habitat for steelhead is present in the Guadalupe River. Construction of the Reduced Intensity Alternative, as with the Project, could result in noise, vibration, artificial light, and other physical disturbances adjacent to the Guadalupe River that could harass fish, disrupt, or delay normal activities, and cause injury or mortality. Injury or mortality may result from direct and indirect contact with humans and machinery, vibration, sound pressure, and physiological stress. Mitigation Measure BIO-4.1, as required for the Project, would protect steelhead and fall-run Chinook salmon and their critical habitat during construction, operation, and maintenance activities on the Guadalupe River riverbank.

As with the Project, runoff from construction activities associated with the Reduced Intensity Alternative could temporarily degrade water quality and aquatic habitats in San Tomas Aquino Creek and the Guadalupe River. Special-status fish species present in the Guadalupe River could be adversely affected by excessive sediment deposits, increased turbidity, and exposure to construction contaminants, including toxic substances that can increase fish mortality, reduce feeding opportunities for fish, and cause fish to avoid important habitat. The Reduced Intensity Alternative, as with the Project, would be required to comply with the Construction General Permit as well as standard erosion control measures and other BMPs identified in a Stormwater Pollution Prevention Plan (SWPPP). These measures would be implemented during construction of the Reduced Intensity Alternative to reduce potential contamination of waterways.

Similar to the Project, the Reduced Intensity Alternative could result in increased pollutants in operational stormwater runoff due to an increase in the amount of impervious surfaces on-site, although to a lesser extent compared to the Project. The Reduced Intensity Alternative would create less impervious surface area because of the smaller building footprints. Stormwater runoff from the site may contain contaminants that could affect water quality in San Tomas Creek and the Guadalupe River as well as steelhead, Chinook salmon, and other native fish species with the potential to be present in either channel. The Reduced Intensity Alternative, as with the Project, would be required to comply with San Francisco Bay Municipal Separate Storm Sewer Systems Permit, Provision C.3, Stormwater Technical Guidance (SF Bay MS4 Permit), which would mitigate impacts to biological resources resulting from operational stormwater runoff. As with the Project, the Reduced Intensity Alternative would result in less-than-significant impacts with implementation of Mitigation Measure BIO-4.1 and compliance with the SWPPP, Construction General Permit, and SF Bay MS4 Permit. (LTS/M)

Substantial Effect on Wetlands and Other Waters. Currently there are 6.7 acres of ponds and wetlands, as well as a drainage ditch, on the Project site. In addition, San Tomas Aquino Creek and the Guadalupe River are adjacent to the site. As with the Project, some aquatic land cover types would be lost, altered, or affected during construction activities for the Reduced Intensity Alternative. Waters within the jurisdiction of the United States and the State ("waters of the U.S." and "waters of the State") could also be indirectly affected by erosion and stormwater runoff from construction activities, resulting in a temporary increase in sediment load and degrading the water quality of receiving waters. However, implementation of Mitigation Measure BIO-5.1 and BIO-5.2, as required for the Project, would protect the retention pond and drainage swale aquatic habitat during construction and require compensation for the loss of wetland resources. Further, as with the Project, the Reduced Intensity Alternative would also comply with the SWPPP and SF Bay MS4 Permit. Therefore, impacts associated with the Reduced Intensity Alternative would be reduced to a less-than-significant level. (LTS/M)

Conflicts with Local Policies or Ordinances Protecting Biological Resources. The Project could remove up to 951 protected trees in the Project area, up to approximately 153 protected trees at the Tasman East industrial/office development, and up to 79 protected trees at the Santa Clara Convention Center. The Reduced Intensity Alternative would likely result in the same amount of trees removed as the Project because the Reduced Intensity Alternative would still grade the Project site to adjust elevations and the landfill gas collection system would need to be upgraded. Therefore, it is assumed all trees proposed for removal under the Project would be removed as part of the Reduced Intensity Alternative. Removal of these trees would be required to adhere to the City's General Plan, *Policy 5.3.1-P10,* which requires the replacement of trees at a ratio of 2:1 (replaced/lost). Therefore, as with the Project, the Reduced Intensity Alternative would not conflict with any local policies protecting biological resources and impacts would be less than significant. (LTS)

Cumulative Impacts. As discussed in Section 3.8, *Biological Resources*, cumulative impacts with respect to biological resources would be less than significant with the implementation of Mitigation Measures BIO-1.1, BIO-1.2, BIO-2.1, BIO-2.2, BIO-3.1, BIO-4.1, BIO-5.1, and BIO-5.2. Because this alternative is conservatively assumed to involve the same amount of tree removal, the same amount of building demolition, and less building footprint impacts compared to the Project, the same less-than–cumulatively-considerable impacts would occur. As with the Project, the Reduced Intensity Alternative would also result in increased vehicle emissions, which would contribute to cumulative nitrogen deposition impacts on serpentine grassland habitat and supported special-status species. Implementation of Mitigation Measure BIO-C.1 (payment of nitrogen deposition fee) would reduce associated impacts to a less-than-significant level. (LTS/M)

Geology and Soils

Impact Not Evaluated in Detail. As with the Project, the Reduced Intensity Alternative would not use septic tanks and alternative wastewater systems. Therefore, the Reduced Intensity Alternative would not require soils capable of supporting septic systems, and consequently, there would be no impact. (NI)

Soil Erosion. Grading activities on the Project site associated with the Project are anticipated to affect approximately 1.73 million cubic yards (cy) of materials. This would result in large areas of soils (including top soils, subsoils, and unconsolidated sediments) and refuse that would be exposed and may potentially allow erosion from wind and stormwater runoff to occur. The Reduced Intensity Alternative would most likely have a smaller building footprint compared to the Project, resulting in slightly less earthwork and amounts of material that would be exposed. However, it is conservatively assumed that the Reduced Intensity Alternative would also result in the same amount of earthwork and amounts of material that would be exposed as with the Project.

With the substantial amount of material that would be disturbed during grading activities associated with the Reduced Intensity Alternative, this would result in a significant impact related to soil erosion. Further, as with the Project, excavation and grading activities would be conducted in close proximity to the Guadalupe River and San Tomas Aquino Creek, and could result in discharges of sediment-laden runoff to these receiving waters. However, implementation of Mitigation Measure GEO-1.1, as required for the Project, would ensure that all construction-related earthwork activities would be in compliance with California Code of Regulations (CCR) 21190 et seq. Further, as with the Project, the Reduced Intensity Alternative would also comply with the Construction General Permit, which would prevent the entrainment of soils and refuse in stormwater runoff during construction. Impacts associated with the Reduced Intensity Alternative would be reduced to a less-than-significant level. (LTS/M)

Unstable Soils. The preliminary geotechnical investigation for the Project site indicates that underlying soils on and adjacent to the Project site could exhibit unstable characteristics such as settlement, liquefaction, slope instability, expansive soils, or corrosive soils. Given the heterogeneous nature of the refuse underlying the Project site, it is likely that induced settlement of the refuse would be uneven with the new placement of fill proposed by the Reduced Intensity Alternative, creating lateral forces on buildings, utilities, and other improvements that could threaten their structural integrity. The placement of new structures, including residential and commercial buildings, in areas that are subject to liquefaction could expose people to injury or death and could result in substantial damage to valuable improvements (e.g., buildings, infrastructure, and roadways). The relatively steep slopes on the Project site may also be unstable under existing conditions, and slope instability could be increased if new loads (e.g., fills, buildings) are placed on top of these slopes. Soils underlying the Project site may have moderate to high shrink-swell (expansive) potential and if not properly managed, these soils could pose a geotechnical hazard to proposed building foundations and utilities constructed in these soils. Further, soils underlying the Project site and materials within the refuse layers may potentially be classified as corrosive and could corrode construction materials, such as concrete, pipeline materials, and electrical equipment and instrumentation, causing damage to infrastructure.

As with the Project, the potential for the Reduced Intensity Alternative's buildings and improvements to be damaged by slope instability and unstable soils would be a significant impact. Mitigation Measures GEO-2.1 through GEO-2.6, as required for the Project, would reduce potential impacts associated with the Reduced Intensity Alternative by requiring additional geotechnical investigation, developing specific design measures to address each of the identified geologic hazards, and implementing the specified

design measures during construction and a Site Operation, Monitoring, and Maintenance Plan. Therefore, as with the Project, the Reduced Intensity Alternative would result in less-than-significant impacts related to unstable soils. (LTS/M)

Strong Seismic Groundshaking. The Reduced Intensity Alternative would expose approximately 3,270 new residents and 14,730 new net employees to potential seismic groundshaking at the Project site. The risks to public safety from seismic hazards can be mitigated to the extent required by law with implementation of the proper design and construction methods, which would be within the responsibility of the City and the Project Developer to monitor and enforce through its building permit process. As with the Project, buildings and improvements proposed under the Reduced Intensity Alternative would be constructed in accordance with the latest California Building Code (CBC) standards, as required by the Santa Clara City Code. Structures built under the Reduced Intensity Alternative, as with the Project, would be required to meet the seismic design parameters of the CBC, as enforced by the City Building Official. The CBC, as updated, represents the best available guidance for design and construction to limit seismic risk. Consequently, the Reduced Intensity Alternative, as with the Project, would result in less-than-significant impacts with regard to the exposure of people or structures to damage resulting from seismic groundshaking. (LTS)

Cumulative Impacts. Soil and geologic conditions are site-specific and there is little, if any, cumulative relationship between the Project site and other areas in the City. As such, the potential for cumulative impacts to occur is geographically limited for many geology and soils impact analyses. Similar to the Project, the Reduced Intensity Alternative would have a less-than-significant potential to cause cumulatively substantial erosion impacts. Construction and operational activities embodied in the Reduced Intensity Alternative would be subject to the same regulations as the Project. Consequently, cumulative impacts would be less than significant. (LTS)

Hydrology and Water Quality

Impact Not Evaluated in Detail. As with the Project, the Reduced Intensity Alternative is not located within a tsunami inundation area, there are no reservoirs adjacent to the Project site, and the Project site is not within a designated landslide area. The Reduced Intensity Alternative would not be subject to impact related to flooding by seiche, tsunami, or mudflow and there would be no impact. (NI)

Violation of Water Quality Standards or Waste Discharge Requirements. As with the Project, construction activities associated with the Reduced Intensity Alternative would include site clearing and grubbing, demolition and removal of existing structures and pavement, cut and fill activities, grading and excavation, paving, building construction, tree removal, and landscaping. In addition, in off-site areas where new roadways could be developed, as well as the replacement fire station (Option 2), land disturbance during construction could result in the discharge of sediments into nearby storm drains. Land-disturbing activities and placement of stockpiles within proximity to storm drain inlets may also result in a temporary increase in sediment loads to receiving waters and impact receiving surface waters. The Reduced Intensity Alternative, as with the Project, would be required to comply with the Construction General Permit as well as standard erosion control measures and other BMPs identified in a SWPPP.

Further, construction of the Reduced Intensity Alternative could temporarily modify the existing low-permeability land cover, which is intended to prevent precipitation and stormwater runoff from infiltrating into and through the underlying waste. Grading and excavation activities could allow precipitation and runoff to infiltrate into the underlying waste, impacting groundwater quality. As with the Project, the Reduced Intensity Alternative would be required to comply with applicable requirements to prevent migration of leachate groundwater into uncontaminated aquifers; the disposal

of potentially dewatered leachate and natural groundwater to the sanitary sewer system; and the lack of groundwater use for water supply. Therefore, as with the Project, construction activities associated with the Reduced Intensity Alternative would be less than significant in regards to surface water and groundwater quality. (LTS)

As with the Project, the Reduced Intensity Alternative would develop the Project site with office, hotel, mixed-use retail, restaurant, entertainment, residential use, as well as associated parking and site access. Development of the Project site under the Project would increase impervious areas from approximately 10 percent of the site (existing conditions) to approximately 51 percent of the site (under Project conditions). The Reduced Intensity Alternative would likely result in less impervious surface compared to the Project because the Reduced Intensity Alternative would likely have smaller building footprints than the Project. However, to be conservative, it is assumed that the Reduced Intensity Alternative would create the same amount of impervious surfaces as the Project and would thus result in the same amount of stormwater volumes during a rain event.

In addition, similar to the Project, the Reduced Intensity Alternative would be required to comply with SCVWD regulations and reduce peak flows from the Reduced Intensity Alternative to pre-development conditions. The proposed storm drainage system for the Reduced Intensity Alternative would be similar to the Project's and would be capable of conveying the 10-year peak runoff as well as safely conveying the 100-year event peak flows near storm drain pump systems. Mitigation Measure WQ-1.1, as required for the Project and also applicable to this alternative, would be implemented to reduce total runoff rates and associated pollutant discharges by removing pollutants from stormwater using methods, such as filtration, infiltration and sedimentation. Further, as with the Project, the Reduced Intensity Alternative would be required to comply with the SF Bay MS4 Permit Provision C.3 Stormwater Technical Guidance and the Santa Clara Valley Urban Runoff Pollution Prevention Plan (SCVURPPP). Therefore, as with the Project, potential water quality impacts would be less than significant under the Reduced Intensity Alternative. (LTS/M)

Effects on Groundwater Supplies and Recharge. As with the Project, construction and operation activities associated with the Reduced Intensity Alternative would have essentially no impact on net deep infiltration and groundwater recharge. Most of the Project site is covered with soil over a low-permeability cover intended to prevent precipitation and stormwater runoff from infiltrating into and through the underlying waste. Thus, under existing conditions, the Project site does not contribute significantly to groundwater supplies by direct recharge through site soils. As with the Project, the Reduced Intensity Alternative would preserve the existing low-permeability cover so that the Project site recharge potential would remain essentially unchanged and would not pump groundwater for use as water supply. Therefore, as with the Project, construction and operation impacts on groundwater supplies and recharge would be less than significant. (LTS)

Changes to the Existing Drainage Patterns. Similar to the Project, construction activities associated with the Reduced Intensity Alternative would alter existing drainage patterns and could result in local (on-site) and temporary erosion and siltation during construction. Sediment transport to local drainage facilities such as drainage inlets, culverts, and storm drains could also result in reduced storm flow capacity, resulting in localized ponding or flooding during storm events. The Reduced Intensity Alternative, as with the Project, would be required to comply with the Construction General Permit as well as standard erosion control measures and other BMPs identified in a SWPPP. These measures would be implemented during construction of the Reduced Intensity Alternative to reduce potential contamination of waterways due to changes of the existing drainage pattern on-site.

As with the Project, the Reduced Intensity Alternative would alter the on-site drainage patterns with the development of the buildings, roadways, and open space areas that would modify the elevations of the Project site, thus altering the stormwater runoff pattern. The Reduced Intensity Alternative would most likely result in the creation of less impervious surface compared to the Project because the Reduced Intensity Alternative would most likely have a smaller building footprint than the Project. However, to be conservative, it is assumed that the Reduced Intensity Alternative would create the same amount of impervious surfaces as the Project and would thus result in the same amount of stormwater runoff. The Reduced Intensity Alternative would include an on-site storm water collection, detention, and potentially retention/re-use system consisting of a series of drainage inlet structures, piped conveyance systems, and treatment systems and cisterns. These alterations would not result in on-site or off-site erosion or siltation because the majority of surface area would be paved and, therefore, no sediment would be exposed and vulnerable to erosion. Mitigation Measure WQ-1.1, as required for the Project, would involve treating additional sources of runoff created by the Reduced Intensity Alternative with stormwater management measures. Further, as with the Project, the Reduced Intensity Alternative would also comply with the SWPPP, SF Bay MS4 Permit, and all applicable regulations pertaining to stormwater runoff. Impacts associated with the Reduced Intensity Alternative would be reduced to a less-than-significant level.

As with the Project, the Reduced Intensity Alternative would include a bridge crossing over San Tomas Aquino Creek. This bridge and the new outfalls within San Tomas Aquino Creek may affect 100-year flood flows and cause changes to the existing channel morphology. Mitigation Measure WQ-3.1 would require the new bridge and outfall structures to be designed to avoid increases in the 100-year flow as well as creek bed/channel erosion. Mitigation Measure WQ-3.2 would require vegetation removal from the Retention Basin drainage swale. Further, with regulatory compliance and implementation of Mitigation Measure WQ-1.1, impacts associated with the Reduced Intensity Alternative would be reduced to a less-than-significant level. (LTS/M)

Changes to Stormwater Runoff. Based on a preliminary evaluation of the drainage infrastructure for the Project, there is sufficient capacity to convey 100-year peak flows, and additional runoff from the Project would not increase 100-year flood elevations. The Reduced Intensity Alternative would likely result in the creation of less impervious surface compared to the Project because the Reduced Intensity Alternative has a smaller building footprint than the Project. However, to be conservative, it is assumed that the Reduced Intensity Alternative would create the same amount of impervious surfaces as the Project and would thus result in the same amount of stormwater runoff. As with the Project, the Reduced Intensity Alternative would also likely abandon the existing storm system infrastructure serving the Project site (the Golf Course Pump Station system) and upgrade the Eastside Storm Drain Pump Station. The final design for the stormwater management and storm drainage system upgrades would ensure sufficient storm drain capacity for the Reduced Intensity Alternative. Mitigation Measure WQ-1.1, as required for the Project, would involve treating additional sources of runoff created by the Reduced Intensity Alternative with stormwater management measures. Further, the Reduced Intensity Alternative would adhere to all applicable federal, State, and local requirements associated with stormwater runoff. Therefore, as with the Project, the Reduced Intensity Alternative would result in less-than-significant impacts with implementation of Mitigation Measure WQ-1.1 and compliance with applicable regulations associated with stormwater runoff. (LTS/M)

Degradation of Water Quality. There are 6.7 acres of ponds and wetlands, as well as a drainage ditch, on the Project site. In addition, San Tomas Aquino Creek and the Guadalupe River are adjacent to the site. As with the Project, some aquatic land cover types would be lost, altered, or affected during construction activities for the Reduced Intensity Alternative. Waters of the U.S. and waters of the State

could also be indirectly affected by erosion and stormwater runoff from construction activities, resulting in a temporary increase in sediment load and degrading water quality of receiving waters. However, implementation of Mitigation Measure BIO-5.1 and BIO-5.2, as required for the Project, would protect the retention pond and drainage swale aquatic habitat during construction and require compensation for the loss of wetland resources. Further, as with the Project, the Reduced Intensity Alternative would also comply with the SWPPP and SF Bay MS4 Permit. Impacts associated with the Reduced Intensity Alternative would therefore be reduced to a less-than-significant level. (LTS/M)

Impacts from Flooding in a Flood Hazard Area. The Reduced Intensity Alternative would add approximately 3,270 new residents and 14,730 new net employees to the Project site, which has the potential to expose additional people to flooding hazards from being located in a flood hazard area. The majority of the Project site is located within the Federal Emergency Management Agency (FEMA)-designation of Zone X, which is the 500-year flood zone and areas of minimal flood hazard. The eastern edge of Parcels 1 and 2, along a portion of the Eastside Drainage Channel and the Retention Basin, are identified as Zone AH, which is the 100-year flood zone and is indicative of shallow flooding. As with the Project, the Reduced Intensity Alternative's residential and commercial structures located within the Project site would not be located within the portions of parcels that are FEMA-designated 100-year flood zones. The Reduced Intensity Alternative would include the same off-site components (potential replacement of Fire Station 10 at the Option 2 location at the Santa Clara Convention Center parking lot and the Lick Mill Boulevard extension) as the Project. The Option 2 location of Fire Station 10 is not located within a FEMA-designated 100-year flood zone. As with the Project, a portion of the off-site Lick Mill Boulevard extension would be located within the 100-year flood Zone AH. In the event of a 100-year flood, the roadway would be flooded, and access to the site may be restricted during large storm events. However, roadways are relatively resilient to infrequent flooding and are readily repairable if damaged during such large events. As with the Project, impacts would be significant but limited to the period of the large storm event and immediately afterward. Implementation of Mitigation Measure WQ-6.1, as required for the Project, would protect Project-related roadways from flooding. Impacts associated with the Reduced Intensity Alternative would be reduced to a less-than-significant level. (LTS/M)

Impacts from Failure of a Levee or Dam. The Reduced Intensity Alternative would expose approximately 3,270 new residents and 14,730 net new employees to the potential dam failure inundation area for Anderson Dam and Reservoir and Lenihan Dam/Lexington Reservoir. As with the Project, portions of the Reduced Intensity Alternative parcels may be subject to inundation during levee or dam failure. The SCVWD and regulatory agencies including the California Division of Safety of Dams and the Federal Energy Regulatory Commission have put into place a storage restriction at the Anderson Dam and Reservoir to prevent the uncontrolled release of water in case of a failure after a major earthquake. Although Lenihan Dam may incur some settlement during a major earthquake, the SCVWD has concluded that the dam structure overall would remain intact, and the potential for significant crack formation is low. Because the failure of the dam is considered remote, the Reduced Intensity Alternative, as with the Project, this impact would be less than significant. (LTS)

Cumulative Impacts. The Reduced Intensity Alternative would result in the same (or slightly less) hydrology and water quality impacts compared to the Project. Cumulative impacts under the Project, including water quality impacts, groundwater recharge and supplies, storm drain capacity, and flooding would result in less than cumulatively considerable impacts with mitigation. Accordingly, the Reduced Intensity Alternative would result in the same cumulatively considerable impacts as the Project and require implementation of Mitigation Measures WQ-1.1 and WQ-6.1. (LTS/M)

Hazards and Hazardous Materials

Impacts Not Evaluated in Detail. As with the Project, the Reduced Intensity Alternative would not impact private airstrips or be subject to impacts from wildland fires. The Reduced Intensity Alternative would result in no impact related to these issues. (NI)

Routine Hazardous Materials Use. The Reduced Intensity Alternative would be required to comply with mandatory hazardous materials regulations and SWPPP requirements. Project construction would involve routine transport, use, and disposal of hazardous materials such as solvents, paints, oils, grease, and caulking. Compliance with applicable regulations would ensure that potential releases from the transport and use or disposal of hazardous materials during Reduced Intensity Alternative construction activities would be reduced to a less-than-significant level, similar to the Project.

During operation, it is anticipated that the Reduced Intensity Alternative would involve the routine use and handling of small quantities of commercially available hazardous materials, such as household cleaning, swimming pool/spa, and landscaping supplies, as well as diesel fuel for backup generators. The relocated Fire Station 10 would use similar types and quantities of hazardous materials as the existing fire station. Use, storage, and disposal of these materials would be regulated according to federal and State regulations and guidelines, the intent of which is to minimize the risk of upset. Therefore, the risk of accidental explosion or release of hazardous materials that could create a health hazard with the implementation of the Reduced Intensity Alternative is low, and impacts would be less than significant, similar to the Project. (LTS)

Accidental Release of Hazardous Materials. As with the Project, the Reduced Intensity Alternative could result in potential upset and accident conditions associated with building demolition and excavation activities at the Project site. Demolition of buildings containing hazardous building materials on the Project site and in Tasman East for the Lick Mill Boulevard extension could release hazardous materials into the environment. However, based on the age of the buildings, asbestos-containing materials are not expected to be encountered during demolition. As with the Project, the Reduced Intensity Alternative would be required to comply with applicable federal and State OSHA regulations regarding the handling and disposal of hazardous waste. Because compliance with existing regulations would be mandatory, the Reduced Intensity Alternative, as with the Project, would have a less-than-significant impact on the public or the environment during building demolition activities. (LTS)

Excavation activities associated with the Reduced Intensity Alternative would be expected to penetrate into the waste units (i.e., encounter landfill waste). As with the Project, these penetrations into the waste units could expose construction workers to landfill waste (e.g., trash and debris), contaminated soil, airborne dust, and landfill gas. These materials may contain total petroleum hydrocarbons, volatile organic compounds (VOCs), metals, hydrogen sulfide, and methane gas at levels that could present health risks to construction workers. As with the Project, the *Site Investigation and Environmental Risk Assessment* indicates construction workers would not be exposed to COPCs in soil at the Project site above applicable health risk thresholds. However, the Project would place construction workers in proximity to known contaminants during excavation activities. It is possible that localized areas of soil at the Project site contain higher levels of COPCs than indicated by the existing data, resulting in a significant impact. Mitigation Measure HAZ-2.1, as required for the Project, would mandate additional safety measures, as outlined in the draft *Waste Management Plan,* during excavation activities to further protect construction workers. Therefore, as with the Project, the Reduced Intensity Alternative would have a less-than-significant impact on construction workers during excavation activities. (LTS/M)

Proximity to Sensitive Receptors at Schools. The Reduced Intensity Alternative, similar to the Project, could emit hazardous emissions or involve the handling of hazardous materials within 0.25 mile of existing schools. The closest school is Kathryn Hughes Elementary School, which is located about 0.2 mile to the southeast of the Project site. Sources of emissions during construction and operation of the Reduced Intensity Alternative would include DPM and PM 2.5 from vehicle exhaust and operations, operation of emergency generators, and landfill gas emissions from the landfill gas-to-energy (LGTE) plant. As discussed under Section 3.4, *Air Quality*, these emission sources would have a less-than-significant impact on the school. Further, all hazardous materials used during construction and operation would be managed in accordance with applicable laws and regulations. Therefore, as with the Project, emissions and handling of hazardous or acutely hazardous materials during construction and operation of the Reduced Intensity Alternative would have a less-than-significant impact on nearby schools. (LTS)

Landfill Hazards – Hazardous Materials. Parcels 1, 2, 3, and 4 are located on a closed landfill, which is a hazardous materials site included on the Cortese List. These parcels identified contain baseline concentrations of methane gas, hydrogen sulfide gas, and volatile COPCs (benzene, ethylbenzene, trichloroethylene [TCE], and vinyl chloride) in landfill gas that could pose potentially significant hazards to human health. As with the Project, the Reduced Intensity Alternative could result in potential health risks to groundskeepers, indoor commercial workers, and residents at areas of the Project site underlain by refuse. Mitigation Measures HAZ-4.1, HAZ-4.2, HAZ-4.3, HAZ-4.4, HAZ-4.5, and HAZ-4.6, as required for the Project, would require landfill protection measures to minimize exposure to subsurface hazardous materials. Therefore, as with the Project, the Reduced Intensity Alternative would have a less-than-significant impact related to contaminants in the subsurface. (LTS/M)

Non-Landfill Hazards – Hazardous Materials. Soil and soil gases beneath Parcel 5 and the tennis courts located in the southwest portion of Parcel 4 have been impacted by hazardous materials. Like the Project, construction activities under Reduced Intensity Alternative could disturb contaminated soil and/or groundwater beneath the site and pose a potential threat to human health and the environment. Future site users (e.g., residents, commercial workers, maintenance workers) could potentially be exposed to hazardous materials by direct exposure to soils or soil gases that migrate into buildings. If subsurface hazardous materials are not properly managed on Parcel 5 and the southwest portion of Parcel 4 (which are non-landfill areas), development of Reduced Intensity Alternative could have a significant impact on human health and the environment. However, implementation of Mitigation Measures HAZ-5.1 and HAZ-5.2, as included for the Project, would reduce significant impacts related to contaminants in the subsurface on Parcel 5 and the southwest portion of Parcel 4 not underlain by refuse to a less-than-significant level. (LTS/M)

Leachate Collection and Removal Systems (LCRS). Mounding of leachate in the refuse, which can occur due to excessive leachate production and limited recovery, has not been previously observed at the Landfill. Currently, leachate is recovered only from one leachate riser, LR-1, located at Parcel 3. Similar to the Project, development of this alternative would disturb the operation of the existing LCRSs on Parcels 1 and 3. Mitigation Measure HAZ-6.1, as required for the Project, would implement specific LCRS-proposed design elements, as outlined in the *Draft Technical Memorandum: Leachate Collection and Removal System.* Therefore, as with the Project, the Reduced Intensity Alternative would result in less-than-significant impacts on the LCRS. (LTS/M)

Aviation Hazard. The SJC is located about 2.8 miles southeast of the Project site. Parcels 3, 4, and 5 on the Project site are located within an Airport Influence Area due to height restrictions established by FAR Part 77. The Reduced Intensity Alternative's buildings would most likely be shorter than the

Project's buildings, although this alternative's buildings could be the same height as proposed under the Project. As with the Project, the Reduced Intensity Alternative would not be permitted to obstruct navigable airspace associated with the SJC. Therefore, as with the Project, the Reduced Intensity Alternative would have a less-than-significant impact related to aviation hazards at public-use airports. (LTS)

Impairment of Emergency Access or Emergency Plans. As discussed in Section 3.3, *Transportation*, the Project would increase traffic in the vicinity of the Project site. The Reduced Intensity Alternative would also increase traffic, but to a lesser extent than the Project due to the associated 33 percent reduction in daily trips compared to the Project. The City's Local Hazard Mitigation Plan identifies the Santa Clara Fire Department (SCFD) as the responsible coordinating agency for emergency response and describes evacuation procedures in the event of a major disaster within the City of Santa Clara. Emergency access to the Project site would be provided along the nearby major thoroughfares, including SR 237, Great America Parkway/Great America Way, Lafayette Street, and Tasman Drive. As with the Project, implementation of the Reduced Intensity Alternative would not be expected to interfere with emergency response and evacuation procedures described in the adopted Local Hazard Mitigation Plan. Therefore, a less-than-significant impact would occur, similar to the Project. (LTS)

Landfill Hazards – Subsurface Fires. Parcels 1, 2, 3, and 4 are located on a closed landfill where aerobic decomposition or chemical oxidation of waste materials could result in a subsurface fire that could pose a potentially significant impact to human health and property. As with the Project, the Reduced Intensity Alternative would comply with BAAQMD Regulation 8, Rule 34, which requires wellheads for the landfill gas collection and removal system at the Project site to be sampled monthly for methane, oxygen, carbon dioxide, balance gas (primarily nitrogen), temperature, and vacuum pressure. These parameters can be useful for indicating potential subsurface fire events. Mitigation Measures HAZ-9.1, HAZ-9.2, and HAZ-9.3, as required for the Project, would implement a subsurface fire prevention, detection, and response plan; include subsurface fire prevention and detection measures; and provide guidance for subsurface fire suppression. Therefore, as with the Project, potential impacts from landfill fires would be less than significant under the Reduced Intensity Alternative. (LTS/M)

Cumulative Impacts. The cumulative setting for the Reduced Intensity Alternative for hazards and hazardous materials is the same as for the Project. Because the Reduced Intensity Alternative would develop the Project site similar to the Project and would disturb the comparable amounts of soil, this alternative would have the same cumulative site-specific impacts regarding landfill siting hazards, aviation hazards, and impacts to emergency access and emergency plans. Development of the Reduced Intensity Alternative and other cumulative development could expose people or the environment to residual contaminants in soil and/or groundwater if measures are not implemented to control unintentional or inadvertent releases. Development of the Reduced Intensity Alternative and other cumulative development could also expose people to asbestos, lead, PCBs, or other hazardous materials in existing buildings that may be demolished, renovated, or rehabilitated if measures are not implemented to control unintentional or inadvertent releases. However, implementation of Mitigation Measures HAZ-2.1, HAZ-4.1 through HAZ-4.6, HAZ-6.1, and HAZ-9.1 through HAZ-9.3, as required for the Project, and compliance with current regulatory standards, would reduce the Reduced Intensity Alternative's contribution to cumulative impacts to less than significant, similar to the Project. (LTS/M)

Population and Housing

Impact Not Evaluated in Detail. The Reduced Intensity Alternative would not displace any housing. As with the Project, the existing structures and off-site buildings to be demolished do not include any housing units. Therefore, the Reduced Intensity Alternative would not displace residents and there would be no impact related to the displacement of housing. (NI)

Population Growth. Construction of the Reduced Intensity Alternative would temporarily increase construction employment in the City, although comparatively less than the Project due to less building area to be constructed under the Reduced Intensity Alternative, resulting in a shorter construction period. Although construction would occur over an extended period of time, the demand for construction employment would likely be met within the existing and future labor market in the City and the County, and workers from outside the City or County would not be expected to relocate permanently. Therefore, as with the Project, construction of the Reduced Intensity Alternative is not anticipated to increase the population within the City or County substantially during the construction phase. Impacts are less than significant. (LTS)

The Reduced Intensity Alternative would result in a residential population of approximately 3,270 new residents, the same amount of new residents compared to Scheme A and 2,790 more residents compared to Scheme B. Because the City's population is expected to grow by approximately 34,000 residents (27.8 percent) between 2015 and 2040, the Reduced Intensity Alternative, as with Scheme A, would account for approximately 9.6 percent of the population growth over this 25-year period. As with the Project, because this growth is not anticipated in the City's General Plan or accounted for in regional planning efforts, the Reduced Intensity Alternative would result in significant secondary environmental impacts from the increase in population and the number of households in the City and the region. Although this Alternative would have less of an effect on the jobs and housing balance than the Project, it would still worsen the jobs-housing ratio compared with existing conditions as well as conditions that would result from build-out of the City's General Plan. As discussed in Section 3.3, *Transportation*; Section 3.4, *Air Quality*; and Section 3.5, *Greenhouse Gas Emissions*, the Project would result in significant and unavoidable operational traffic, air quality, and GHG emissions, due, in part, to more vehicular trips for commutes, resulting from the jobs and housing imbalance at the Project site and in the City. (SU)

Displacement of People. The existing uses on the Project site and the off-site Tasman East industrial/office development employ approximately 510 employees (35 employees on the Project site and 475 employees off-site at Tasman East). As with the Project, the Reduced Intensity Alternative would displace the 510 existing employees through the demolition of these existing structures associated with these uses. The approximately 32 employees that would be displaced due to the demolition of the Santa Clara Golf & Tennis Club, restaurant and banquet facility, and BMX track would not be significant enough to trigger the construction of replacement housing elsewhere. Existing employees at the Fire Station 10 (approximately 3 employees) and Tasman East industrial/office development (approximately 475 employees) could be accommodated by the replacement fire station or the office uses on the Project site proposed as part of the Reduced Intensity Alternative. Therefore, as with the Project, since the majority of the employees currently working on the Project site could be accommodated by the Reduced Intensity Alternative or within commuting distance, the Reduced Intensity Alternative would not displace a substantial number of people and would not necessitate the construction of replacement housing. Therefore, the impact would be less than significant. (LTS)

Cumulative Impacts. As with the Project, the cumulative setting for the Reduced Intensity Alternative for population and housing is the City of Santa Clara. The Reduced Intensity Alternative, in combination with other projected growth in the City, would increase population and housing in the City. As with the Project, the Reduced Intensity Alternative would result in approximately 3,270 new on-site residents, which are not accounted for in the City's General Plan or anticipated in regionally planning efforts. Tasman East, the only potential residential development in the vicinity of the Project site, would develop approximately 1,820 dwelling units, which were not anticipated in the growth projections in the General Plan. This would result in approximately 4,368 new residents. The Reduced Intensity Alternative and the Tasman East residential development would increase the City's residential population by 7,638. Added to the current population of 120,973, this would result in a total City population of 128,611 in 2030, which would not result in an exceedance of ABAG population projections for the City in 2030. Thus, as with the Project, this cumulative impact is less than significant.

In terms of displacing substantial numbers of people, if cumulative projects were to displace large numbers of the existing employee population in the City without providing for replacement spaces or accommodation, the impact would be significant. The cumulative projects in the City are redevelopments and expansion of their existing uses. It is likely that the cumulative projects would be able to accommodate any displaced employees at these sites (if any) within the proposed development in the Project site or within commuting distance. As with the Project, the Reduced Intensity Alternative would displace 510 workers on-site and off-site at the Tasman East industrial/office development, but most of the displaced workers could be accommodated by the Reduced Intensity Alternative or within commuting distances. Thus, as with the Project, the Reduced Intensity Alternative would not result in a considerable contribution to this cumulative impact. This impact is less than significant. (LTS)

Public Services

Fire Service Impacts. The Reduced Intensity Alternative would result in a residential population of approximately 3,270 new residents and a net increase of approximately 14,730 new employees. Compared to the Project, the Reduced Intensity Alternative would result in the same amount of residents and 10,020 fewer employees under Scheme A and 2,790 more residents and 13,980 fewer employees under Scheme B. However, the Reduced Intensity Alternative would still represent an increase in on-site activity over existing conditions, and there could be more incidents requiring SCFD response. The Reduced Intensity Alternative, as with the Project, would degrade the existing service ratios due to an increase in the daytime population and the residential population at the Project site and would require additional staff and resources to serve the increased activity. However, as with the Project, the Reduced Intensity Alternative could retain the existing Fire Station 10 at its current location or relocate the existing station on-site or off-site. To maintain appropriate response times and ratios, existing SCFD firefighters may need to be shifted such that additional firefighters are assigned to Fire Station 10. Additional personnel needed to maintain the existing firefighter-to-resident ratio could be accommodated within Fire Station 10, especially if it is expanded beyond its existing size, and additional facilities would not be necessary. The Reduced Intensity Alternative's impact on fire services would be less than the Project due to the decrease in employee population compared to the Project and would remain less than significant. (LTS)

Police Service Impacts. Similar to the Project, the Reduced Intensity Alternative would require an increased level of police services due to intensifying site activity; adding new residents, employees, and visitors; increasing square footage; and increasing traffic incidents. With more on-site activity, there could be more incidents requiring police response. The Reduced Intensity Alternative, as with the Project, would degrade the existing officer-to-resident ratios due to additional on-site employees and residents and

would require additional personnel and resources to serve the increased activity at the Project site. Per input from SCPD, the Project (which would result in the same number of residents at the Project site compared to the Reduced Intensity Alternative) would require four additional officers to maintain the existing officer-to-resident ratio. SCPD recently received approval to hire two officers and has plans to hire three additional officers, for a total of five new officers. As with the Project, this is more officers than is needed to maintain service levels for the Reduced Intensity Alternative. The need to accommodate additional officers and staff due to Reduced Intensity Alternative implementation may result in the need for additional equipment or redesign of existing SCPD facilities to resolve capacity issues. However, SCPD has no plans to add equipment or expand its current facility at 601 El Camino Real. Although additional SCPD staff members may be required, the Reduced Intensity Alternative would not trigger the need for the construction of a new police facility or the expansion of an existing one. Thus, the increased level of police services would not be large enough to trigger the need for the construction of new or expanded facilities that could adversely affect the physical environment or affect human health and safety. This alternative's impacts regarding police services would be less than the Project, due to the decrease in employee population compared to the Project, and would remain less than significant. (LTS)

School Impacts. The Reduced Intensity Alternative would result in the same amount of residential units on-site as the Project. This alternative, as with the Project, would generate approximately 141 elementary school students, 53 middle school students, and 65 high school students from the Project's residential development. Impacts from the Reduced Intensity Alternative generated students would be mitigated by the payment of the school impact fees established by SB 50 paid by the Project Developer. The Reduced Intensity Alternative's impacts regarding schools would be exactly the same as under the Project and would remain less than significant. (LTS)

Recreational Impacts. As with the Project, the Reduced Intensity Alternative could result in three types of impacts on parks and recreational facilities: (1) impacts associated with eliminating existing on-site active recreational facilities, (2) impacts associated with recreational demand from new residents and employees on existing off-site park and recreational facilities, and (3) the combined impacts associated with eliminating existing on-site active recreational facilities and impacts associated with recreational demand from new residents and employees. The closure of the existing on-site recreational facilities, specifically the golf course, restaurant and banquet facility, tennis courts, and BMX track, would force users to seek alternative recreational venues in the area. However, as discussed in Section 3.13, *Public Services,* the current on-site facilities are slightly underutilized, and if the users are distributed evenly, the large number of other existing venues in the area would have capacity to accommodate these users. Although the Reduced Intensity Alternative, as with the Project, would increase the use of other existing recreational facilities due to the closure of the on-site golf course, restaurant and banquet facility, tennis courts, and BMX track, this would not result in substantial physical deterioration of these facilities within the City and neighboring cities because these facilities would have adequate capacity to accommodate users, resulting in a less-than-significant impact.

Implementation of the Reduced Intensity Alternative would also contribute to an increased demand for parkland because the Reduced Intensity Alternative would result in approximately 3,270 new permanent residents living on the Project site and 14,730 net new employees. New residents and employees could use the nearby park facilities, such as Fairway Glen Park, the Santa Clara Youth Soccer Park, the Ulistac Natural Area, the San Tomas Aquino/Saratoga Creek Trail, and the Guadalupe River Trail. However, as with the Project, the Reduced Intensity Alternative would provide on-site amenities such as entertainment facilities and large, shared open spaces throughout the Project site. This would reduce the likelihood of residents and employees utilizing or overburdening existing City facilities because outdoor areas would be available to employees and residents that would be closer than the

existing open space areas, as discussed above. It is assumed that the proposed public open spaces on the Project site under the Reduced Intensity Alternative would be similar to those proposed as part of the Project. As with Scheme A, based on the residential population generated by the Reduced Intensity Alternative, this alternative would be required to dedicate up to approximately 8.27 acres of parkland in accordance with the Mitigation Fee Act.[10] To the extent that the Project Developer is not able to fully satisfy the park requirement using on-site credits, the Project Developer would pay park in-lieu fees to satisfy the City's parkland dedication requirement.

Implementation of the Reduced Intensity Alternative, as with the Project, would result in the combined impacts of eliminating existing on-site active recreational facilities and the recreational demand from new residents and employees. As discussed above, implementation of the Reduced Intensity Alternative would reduce the recreational facilities within the City and region because the alternative would convert the existing recreational uses on-site into a new mixed-use development. Further, implementation of the Reduced Intensity Alternative would also contribute to an increased demand for parkland from the associated residents and employees. As with the Project, the recreational users that would be displaced by the Reduced Intensity Alternative and the new residents and employees that would be generated by the alternative would most likely use other nearby facilities with similar resources in Santa Clara, San José, Sunnyvale, and Milpitas. Although the use of these facilities would increase, this increase is not expected to result in substantial physical deterioration of the facilities because the current on-site facilities are slightly underutilized, and if the users are distributed evenly, the large number of other existing venues, including golf courses, would have the capacity to accommodate these users. In addition, fees paid by the Project Developer would be used by the City to acquire and/or develop new parkland and/or amenities or facilities and mitigate any environmental impacts from the development of those facilities. Thus, as with the Project, the Reduced Intensity Alternative's impacts regarding recreation would be less than significant. (LTS)

Library Impacts. The Reduced Intensity Alternative would add residents to the Project site who could use the City's libraries. The Reduced Intensity Alternative would result in a residential population of approximately 3,270 new residents, which is the same as the Project. As with the Project, the Reduced Intensity Alternative would slightly degrade the library-space-per-resident ratio from 0.86 to 0.84 square feet of library space per resident, slightly degrade the librarian-full-time-employee- (FTE-) per-resident ratio from one librarian FTE per 2,388 residents to one librarian FTE per 2,452 residents, and degrade the existing book-volumes-per-capita ratio from 3.22 to 3.14 book volumes per capita as well as the library-items-per-capita ratio from 3.68 to 3.58 library items per capita. Further, the Reduced Intensity Alternative, as with the Project, would degrade the State average for the library-space-per-resident ratio to a level that would be below the State average and result in the librarian-FTE-per-resident ratio falling below the State average of one FTE per 3,429 residents. However, as indicated in the City's General Plan EIR, future growth in the City may require additional library facilities. It is likely that any new library facilities would be located on existing urban parcels, given that the City is mostly built out. The additional volumes and other library items required to maintain the book-volumes-per-capita ratio and library-items-per-capita ratio due to implementation of the Reduced Intensity Alternative would not necessitate the construction of a new library facility. Therefore, the Reduced Intensity Alternative, as with the Project, would not result in substantial adverse physical environmental impacts associated with the provision of new or physically altered library facilities in order to maintain

[10] The Mitigation Fee Act dedication standard is 2.53 acres per 1,000 residents.

acceptable service ratios or other performance objectives. Accordingly, library impacts as a result of the Reduced Intensity Alternative would be less than significant. (LTS)

Cumulative Impacts. The cumulative setting for the Reduced Intensity Alternative for public services is the same as for the Project. Cumulative development in the City would result in increased demand for fire services, police services, school facilities, parks, recreational facilities, and library facilities to accommodate growth. As with the Project, cumulative impacts to public services would be significant if the firefighter/police staff to resident ratio and service response time is degraded for fire and police services, and new library facilities are not constructed to accommodate this growth. The Reduced Intensity Alternative would result in an increase of 3,270 new residents, the same number of residents as compared to the Project. As with the Project, although additional firefighters and police staff are required for the Reduced Housing Alternative to maintain the staffing to resident ratios, these staffing increases could be accommodated within existing facilities or within Fire Station 10. With the provision of the City's parkland dedication/payment of in-lieu and school impact fees, the cumulative impact on parks and recreation and schools would be less than significant. Therefore, as with the Project, the Reduced Intensity Alternative's cumulative impacts to public service providers would be less than significant. (LTS)

Utilities and Service Systems

Water Demand. The Project's Scheme A would result in a total water demand of 1,911 acre-feet per year (afy) and Scheme B would result in a total water demand of 1,921 afy. The Reduced Intensity Alternative would demand slightly less water than the Project due to the decrease in the number of employees at the Project site. When taking into account other approved development and the water demand of the Reduced Intensity Alternative, along with existing demand, there is adequate projected water supply to 2035 under normal year, single dry year, and multiple dry year scenarios, as with the Project. Therefore, as with the Project, implementation of the Reduced Intensity Alternative would have a less-than-significant impact on water supplies in SCVWD's service area and expansion of existing water supply entitlements would not be necessary to accommodate this alternative. (LTS)

Water Delivery System. Implementation of the Project would require the expansion of the City's water delivery system, including both on-site and some off-site locations, but would not require expansion of the recycled water system off-site. The Reduced Intensity Alternative would most likely result in a lesser expansion of the City's water delivery system as compared to the Project because the Reduced Intensity Alternative would most likely have a smaller building footprint than the Project. Nonetheless, as with the Project, the Reduced Intensity Alternative would implement all relevant mitigation measures included in the EIR that apply to water line and recycled water line construction on- and off-site. Therefore, as with the Project, potential impacts to the City's water and recycled water delivery system would be less than significant with mitigation under the Reduced Intensity Alternative. (LTS/M)

Wastewater Generation. As with the Project, the Reduced Intensity Alternative would not exceed the wastewater treatment requirements of the San Francisco Regional Water Board or violate solid waste regulations. The Reduced Intensity Alternative would result in no impact related to these issues.

Implementation of the Project would result in a total average dry weather flow (ADWF) of approximately 1.75 million gallons per day (mgd) and a total peak flow of approximately 4.6 mgd. The Reduced Intensity Alternative would generate slightly less wastewater than the Project due to the decrease in the number of employees at the Project site. No industrial wastewater would be generated by the Reduced Intensity Alternative as it involves the operation and maintenance of residential,

commercial, office, hotel, and entertainment uses. As with the Project, a new wastewater system would be installed on-site to accommodate the flows generated by the Reduced Intensity Alternative, and no specific changes to the San José/Santa Clara Regional Wastewater Facility (WWTF) would be required to treat these flows. Therefore, as with the Project, the Reduced Intensity Alternative would have a less-than-significant impact related to wastewater treatment facilities and on-site wastewater delivery systems. Regardless, the Reduced Intensity Alternative could contribute to the need for additional off-site wastewater delivery systems due to future insufficient pumping capacity, which is considered a considerable contribution to a significant cumulative impact. Mitigation Measure UT-3.1, as required for the Project, would be implemented to address the Reduced Intensity Alternative's contribution to a cumulative wastewater pumping capacity deficit. Therefore, as with the Project, potential wastewater infrastructure impacts during operation of the Reduced Intensity Alternative would be less than significant with mitigation. (LTS/M)

Stormwater Generation. Development of the Project site under the Project would increase impervious areas from approximately 10 percent of the site (existing conditions) to approximately 51 percent of the site (under Project conditions). The Reduced Intensity Alternative would likely result in less impervious surface area created compared to the Project because the Reduced Intensity Alternative would most likely have a smaller building footprint than the Project. However, to be conservative, it is assumed that the Reduced Intensity Alternative would create the same amount of impervious surfaces as the Project and would thus result in the same amount of stormwater volumes during a rain event. As with the Project, the Reduced Intensity Alternative would be required to comply with SCVWD regulations and reduce peak flows from the Reduced Intensity Alternative to pre-development conditions. The proposed storm drainage system for the Reduced Intensity Alternative would be similar to the Project's and would be capable of conveying the 10-year peak runoff as well as safely convey the 100-year event peak flows near storm drain pump systems. Mitigation Measure WQ-1.1, as required for the Project, would be implemented to reduce total runoff rates and associated pollutant discharges by removing pollutants from stormwater using methods, such as filtration, infiltration and sedimentation. Further, as with the Project, the Reduced Intensity Alternative would be required to comply with the SF Bay MS4 Permit Provision C.3 Stormwater Technical Guidance and the (SCVURPPP. Therefore, as with the Project, potential impacts to the City's storm drain system would be less than significant with mitigation under the Reduced Intensity Alternative. (LTS/M)

Solid Waste Generation. Demolition of the existing on-site facilities under the Reduced Intensity Alternative would generate the same amount of waste as the Project and would not constitute a substantial portion of the solid waste facility's daily permitted capacity. Therefore, the solid waste facilities that would serve the Project site during construction would be sufficient to accommodate the construction waste generated by the Reduced Intensity Alternative.

Assuming a 50 percent diversion rate, implementation of the Project would result in a total solid waste generation of approximately 8,972 tons per year that would be disposed of at the Newby Island Landfill. Because the Reduced Intensity Alternative would include fewer employees than the Project, solid waste generation would be less under this alternative. The solid waste facilities that would serve the Project have sufficient remaining capacity to accommodate the Reduced Intensity Alternative. As with the Project, the Reduced Intensity Alternative would comply with the requirements of the Santa Clara Commercial and Residential Recycling Programs to help the City meet its waste diversion goal of 50 percent. This alternative would not contribute to the need to expand existing or construct new solid waste disposal facilities. Since the Reduced Intensity Alternative would involve less development than the Project, this alternative would also result in less-than-significant impacts related to solid waste generation. (LTS)

Energy Demand. Energy-saving features similar to those of the Project would be implemented for the Reduced Intensity Alternative. These features would result in an exceedance of California's Title 24 standards. Construction energy usage under this alternative would be reduced through the use of energy-efficient construction equipment and trucks as well as alternative fuels. Design features implemented for this alternative and Mitigation Measure GHG-1.2 would result in a reduction in electricity and natural gas demand. Design features and Mitigation Measure TRA-1.1 would result in operational transportation energy savings compared to a project that did not have the mixed-use characteristics, transit location, and TDM measures of the Project. Other measures would result in further reductions of operational energy consumption. As with the Project, the Reduced Intensity Alternative, with mitigation, would result in lower energy consumption compared with a project of similar size that did not incorporate the same design features and mitigation. Therefore, the Reduced Intensity Alternative would not result in inefficient, wasteful, or unnecessary consumption of energy. The impacts would be less than significant with mitigation. (LTS/M)

Cumulative Impacts. The Reduced Intensity Alternative would result in the same (or slightly less) utilities and service system impacts compared to the Project. Cumulative impacts under the Project, including water demand, wastewater generation, stormwater generation, and solid waste generation, would result in less than cumulatively considerable impacts. However, similar to the Project, this alternative would contribute to cumulative energy demands that may result in significant and unavoidable secondary environmental impacts related to long-term energy generation and transmission. (SU)

Increased Housing Alternative

As described above, the Increased Housing Alternative would include an additional 320 housing units on Parcel 4, which would replace 320,000 gsf of office space planned under the Project. As with the Project, the Increased Housing Alternative would include residential, commercial (retail), office, hotel, and entertainment uses. The Increased Housing Alternative would develop the same amount of area as the Project (9.16 million gsf of building area). However, because of the increase in residential units and reduction of office space, this alternative would result in approximately 4,030 new residents and 23,610 new net employees.

The site plan for the Increased Housing Alternative would be generally similar to the Project, and it is assumed that the building footprint of the Increased Housing Alternative would be identical to the Project. Buildings under the Increased Housing Alternative would also be the same height as proposed under the Project. Thus, all footprint-based impacts would be identical to the Project, as explained below. The length of the construction period associated with the Increased Housing Alternative would be similar to the Project's construction period.

Land Use

Impacts Not Evaluated in Detail. As with the Project, the Increased Housing Alternative would not physically disrupt/divide an established community or conflict with a HCP or NCCP. The Increased Housing Alternative would result in no impact to these topics. (NI)

Conflicts with Adopted City Land Use Plans and Policies with Regard to the Jobs/Housing Ratio. A goal of the City's General Plan policies is, in part, to reduce environmental impacts by promoting a balance in the jobs/housing ratio. The City's General Plan policies would facilitate this goal by promoting the construction of more housing in the relatively job-rich Silicon Valley, thereby helping to reduce long-

distance commutes by employees to the Silicon Valley. However, employment growth associated with the Increased Housing Alternative would worsen the City and the County's jobs/housing imbalance, although less than the Project because the Increased Housing Alternative would provide for 320 additional housing units compared to the Project. As with the Project, because this growth is not anticipated in the City's General Plan or accounted for in regional planning efforts, the likely result of the induced housing demand resulting from Increased Housing Alternative-generated jobs is upward pressure for additional housing units to be built in the City, the region, and possibly even outside of the region.

Compared to the Project, the Increased Housing Alternative would result in more residential uses (approximately 760 more residents compared to Scheme A and 3,550 more residents compared to Scheme B) and fewer employees (approximately 1,150 fewer employees compared to Scheme A and 5,110 fewer employees compared to Scheme B). Although this Alternative would have a much smaller effect on the jobs-housing balance than the Project (the Project with Scheme A would have a jobs-housing ratio of 18.1 compared to this alternative's jobs-housing ratio of 14.1), it would still worsen the jobs-housing ratio compared to existing conditions (City's current jobs-housing ratio is somewhere between 2.4 and 2.6) and compared to what would result from the City's current General Plan (2.6). Without adequate housing within the City and other nearby Silicon Valley cities to accommodate job growth resulting from the Increased Housing Alternative, commute lengths to the new jobs would result in substantial transportation, air quality, and GHG impacts. Implementation of Mitigation Measure LU-1.1, as required for the Project, would help increase the housing stock within the City and improve the job/housing ratio. However, because this mitigation measure relies on an iterative General Plan process, ultimately requiring approval from City Council, it cannot be stated with certainty whether or when the mitigation measure could be implemented. Nevertheless, despite mitigation measures designed to reduce environmental effects associated with an increase in VMT, impacts related to transportation, air quality, and GHG emissions remain significant and unavoidable under the Increased Housing Alternative, similar to the Project. (SU)

Conflicts with Airport Land Use Plan and City Policies Related to Airport Noise. As with the Project, the housing proposed at Parcel 4 would be within the 65 dBA CNEL noise contour. Compared to the Project, the Increased Housing Alternative would place an additional 320 housing units in Parcel 4, within the 65 CNEL noise contour. According to CLUP noise policies, multi-family residential uses are "Generally Unacceptable" between the 65 and 70 dBA CNEL noise contours. While Mitigation Measure NOI-1.3 (noise control plan to reduce interior noise at sensitive land uses) would reduce interior noise to an acceptable 45 dBA CNEL level, it would not address exterior noise levels. Therefore, the Increased Housing Alternative, as with the Project, is inconsistent with the CLUP noise policies adopted with the intent to mitigate or avoid an environmental effect. This impact is significant and unavoidable. (SU)

Conflicts with Adopted City Land Use Plans and Policies (Other than Jobs/Housing Balance and Airport Noise). As with the Project, the Increased Housing Alternative would convert the existing Parks/Open Space land uses on-site to a new General Plan land use classification: the Urban Center/Entertainment District proposed within the Mixed-Use designation category. As with the Project, this land use change would allow for the office buildings, retail and entertainment facilities, residential units, hotel rooms, open spaces, new roadways and access points, and surface and structured parking facilities proposed under the Increased Housing Alternative. While the alternative would be inconsistent with the current Parks/Open Space land use designation, the General Plan Amendment, including the land use classification, would meet the intent of most of the land use policies in the General Plan. Although the alternative would result in some inconsistencies with the General Plan land use policies, similar to the Project, the ultimate determinations of General Plan consistency can and will be made by

City Council. In addition, the ultimate finding of General Plan consistency does not require that a project be entirely consistent with each individual General Plan policy. A proposed project can be generally consistent with a general plan even though the project may not promote every applicable goal and policy. Because of the general consistency with land use policies, any potential conflicts with the General Plan related to the new land use classification under the Increased Housing Alternative would be less than significant, similar to the Project. (LTS)

Cumulative Impacts. The cumulative setting for the Increased Housing Alternative for land use and planning is the same as the Project. The Increased Housing Alternative would introduce an additional 320 housing units on Parcel 4. This would only marginally increase the jobs/housing ratio associated with the Project since net new employees would only slightly decrease when compared to the Project, to 23,610 net new employees. The cumulative projects considered are largely anticipated in regional plans and respective General Plans. However, the Project as well as the Tasman East project are not accounted for in regional growth projections. This analysis assumes that all other cumulative projects are assumed in their respective General Plans. Combined, the Increase Housing Alternative and the cumulative projects would result in inconsistencies with General Plan policies regarding consistency with General Plan build-out assumptions, consistency with the City's CAP, improving air quality, and reducing VMT. Also, because the ratio of jobs to housing created by the Project would not change substantially with the Increased Housing Alternative, similar to the Project, the Increased Housing Alternative's contribution to the cumulative land use impact would be significant and unavoidable. (SU)

Aesthetics

Impacts Not Evaluated in Detail. As with the Project, the Increased Housing Alternative would not impact scenic resources along a State Scenic Highway or impact scenic vistas. The Increased Housing Alternative would result in no impact to these resources. (NI)

Degradation of Visual Character or Quality. Construction of the Increased Housing Alternative would result in similar changes to the existing visual character and quality of the Project site during construction as with the Project. During the construction stage, there would be visual impacts within the 240-acre site from the demolition of existing buildings, the assembly of new structures at all parcels, construction of new roadways and access points, and equipment staging. The Increased Housing Alternative would include the same off-site components (i.e., off-site infrastructure improvements, vehicular access, bicycle/pedestrian circulation) as the Project. These off-site components, including the demolition of the existing Tasman East buildings and the potential replacement of Fire Station 10 at the existing Convention Center surface parking lot (Option 2 location), would result in the same construction impacts as the Project. Construction associated with the Increased Housing Alternative on Parcels 1 and 2 would be most visible to Guadalupe River trail users, a sensitive viewer group, resulting in a potentially significant impact. Mitigation Measure AES-1.1, which is required for the Project, would require soils from other parcels that are imported to Parcel 2 to be stored in areas that are not within view of the Guadalupe River Trail or distributed across Parcel 2 at a depth of two feet or less. Mitigation Measure AES-1.2, which is required for the Project, would require early implementation of a landscaping plan for Parcels 1 and 2. Implementation of Mitigation Measures AES-1.1 and 1.2 would result in less-than-significant impacts on viewers along the Guadalupe River Trail.

The Increased Housing Alternative would result in the same amount of building space to be developed as under Project conditions. As with the Project, the increase of these building elements from existing conditions would make the Increased Housing Alternative more visible to surrounding areas than

under current conditions. As with the Project, the Increased Housing Alternative would not represent a substantial degradation of visual quality and would not be a significant impact on visual character. From most locations, the viewers are not sensitive, and the increased development on the Project site would represent a small portion of the overall landscape. As with the Project, the new office, residential, hotel, and retail buildings under the Increased Housing Alternative would integrate with the surrounding visual character of the area. Therefore, the Increased Housing Alternative would have a less-than-significant impact on the overall existing visual character and quality during operation. (LTS/M)

New Sources of Light and Glare. As with the Project, the Increased Housing Alternative would add exterior lighting to an area where there currently is little to no lighting. Increased lighting at the site could also affect motorists traveling on SR 237 or on major roads in the Project area, residents in the neighborhood to the south of Tasman Drive, and residents in the neighborhood to the east of the Guadalupe River in San José. The increase of building heights from existing conditions would make the building lights more visible to surrounding areas. The lighting performance standards set by LEED would be followed through lighting specifications, shielding techniques, automatic lighting controls, and light pollution considerations. In addition, Mitigation Measure AES-2.1 and AES-2.2, as required for the Project, would require the installation of low-profile lighting and shielded fixtures, reducing the potentially significant lighting impact to less than significant.

As with the Project, the Increased Housing Alternative could also result in highly reflective surfaces at the Project site. Glare from these surfaces could create hazards to motorists along major road corridors, such as SR 237. Thus, the Increased Housing Alternative would result in potentially significant impacts. Mitigation Measure AES-2.3, which is required for the Project, would treat reflective surfaces, resulting in less-than-significant impacts.

As with the Project, light and glare from vehicle headlights on the levels of the aboveground parking lot and garages could be a nuisance to motorists and occupants of the surrounding uses under the Increased Housing Alternative. The proposed parking structures could be visible to motorists traveling along SR 237, adjacent streets and from the adjacent development such as office uses and the Convention Center. Thus, the Increased Housing Alternative would result in potentially significant impacts. Mitigation Measure AES-2.4, which is required for the Project, would provide obstruction for glare from vehicle headlights in the proposed garages, resulting in less-than-significant impacts. (LTS/M)

Cumulative Impacts. The cumulative setting for the Increased Housing Alternative for aesthetic resources is the same as for the Project. The Increased Housing Alternative would introduce buildings of greater massing, scale, and height to the Project site compared with existing conditions. The Increased Housing Alternative and the other projects would involve redevelopment of an existing urban site and would be surrounded by similar types of existing development, thus enhancing the visual consistency of the surrounding setting of medium-scale office, industrial, hotel, and stadium development. Combined, the Increased Housing Alternative and the other projects would provide increased unity with the existing and planned surroundings by creating contiguous landscape areas and buildings that reflect a similar architectural design. Therefore, as with the Project, the Increased Housing Alternative, together with other projects, would not result in a substantial degradation of visual character or quality of the surroundings. In addition, because the other projects would all involve redevelopment of an urban site that already generates light and glare and the land uses proposed are not anticipated to be particularly light intensive, development of the other projects in combination with the Increased Housing Alternative would not result in a significant change. As with the Project, the Increased Housing Alternative's cumulative impacts from nighttime lighting and glare would be less than significant. (LTS)

Transportation

Although the Increased Housing Alternative would increase the amount of residential uses, the office uses would decrease to result in the same amount of total square footage at the Project site. Since residential uses generate less traffic than office uses, this alternative would result in approximately 14.2 percent less traffic as compared to the Project, Scheme B. As shown in Table 5-11, the Increased Housing Alternative would result in 120,690 daily trips, with a public transit reduction of 5 percent at Parcels 2, 4 (in Phases 2 and 3), and 5. Comparatively, the Project, Scheme B, would result in approximately 140,730 vehicle trips. Of the trips generated by the Increased Housing Alternative, 8,710 would occur in the AM Peak Hour (6,700 inbound and 2,010 outbound) and 10,190 would occur in the PM Peak Hour (3,530 inbound and 6,660 outbound).

Table 5-11. Increased Housing Alternative Trip Generation (Net New)

	AM Peak Hour			PM Peak Hour			
	In	Out	Total	In	Out	Total	Daily
Parcel 1	1,230	150	1,380	260	1,070	1,330	13,100
Parcel 2	2,210	270	2,480	480	1,920	2,400	23,600
Parcel 3	740	90	830	160	640	800	7,880
Parcel 4	2,380	1,280	3,660	2,260	2,770	5,030	66,560
Parcel 5	330	300	630	520	470	990	14,190
Total without Public Transit Reduction	6,890	2,090	8,980	3,680	6,870	10,550	125,330
Total with Public Transit Reduction (5% for Parcels 2, 4 Phases 2/3, and 5)	**6,700**	**2,010**	**8,710**	**3,530**	**6,660**	**10,190**	**120,690**

Source: Fehr & Peers 2015.

Overall, the Increased Housing Alternative would have an increased number of daily vehicle trips and affected intersections compared to existing conditions, but approximately 14.2 percent fewer trips than the Project, Scheme B. The Increased Housing Alternative would slightly reduce impacts or reduce the severity of impacts by 5 to 20 percent for intersection level of service and freeway segment capacity. Impacts to the transit system, pedestrian facilities, and bicycle facilities would be similar to the impacts from the Project.

No quantitative analysis of affected intersections or freeway segments was conducted for the alternative analysis. This alternative would most likely require Mitigation Measures TRA-1.1 (vehicle trip reduction with TDM), TRA-3.1 (contribution for freeway improvements), TRA-18.1 (Construction Management Plan), and TRA-19.1 (Modified Traffic Management and Operations Plan [TMOP] and Traffic and Parking Management Plan). No Project Alternative 2 may also require Mitigation Measure TRA-1.2 (intersection Improvements but only for significantly affected intersections for this Alternative), TRA-2.1, and TRA-2.2 (Traffic Signal Installation), depending on impacts on unsignalized intersections. There would, however, continue to be significant and unavoidable impacts on several intersections, roadway segments, and Routes of Regional Significance as well as cumulative impacts with the Increased Housing Alternative, as with the Project. (SU)

Air Quality

Conflict with Air Quality Plan. The Increased Housing Alternative would include an additional 320 housing units on Parcel 4 which would replace 320,000 gsf of office space planned under the Project, resulting in 4,030 new residents and 23,610 new net employees. The Increased Housing Alternative would also include the same off-site infrastructure improvements, vehicular access, and bicycle/pedestrian circulation improvements as the Project. Similar to the Project, the Increased Housing Alternative would include several transportation and energy conservation strategies consistent with local-, regional-, and statewide plans to reduce emissions. However, similar to the Project, the Increased Housing Alternative would require a General Plan Amendment to create a new land use designation and would contribute unplanned regional growth. Similar to the Project, the Increased Housing Alternative would conflict with regional air quality plans due to an inconsistency related to socioeconomic forecasts. Therefore, impacts are considered significant and unavoidable. (SU)

Construction Criteria Air Pollutant Emissions. The Increased Housing Alternative would develop a similar building footprint, but replace 320,000 gsf of office with 320 housing units on Parcel 4. The construction duration and intensity is expected to be similar to the Project. Thus, it is likely that the daily construction activities under the Increased Housing Alternative would be similar to the Project. Therefore, daily construction emissions generated by the Increased Housing Alternative would likely be similar to the Project.

Similar to the Project, development of the Increased Housing Alternative would likely exceed the BAAQMD's significance thresholds during construction. Since daily emissions would likely be similar to the Project, similar mitigation would be required.

Construction of the Project would generate average daily exhaust emissions of NO_X that would exceed the BAAQMD's significance threshold. The Increased Housing Alternative would most likely generate a similar level of daily average NO_X emissions, in exceedance of the BAAQMD threshold. Similar to the Project, implementation of Mitigation Measures AQ-2.1, AQ-2.2, and AQ-2.3 would bring average daily NO_X emissions to a level below the BAAQMD threshold. This impact be less than significant. (LTS/M)

Operational Criteria Air Pollutant Emissions The Increased Housing Alternative would result in 4,030 new residents and 23,610 new net employees. Similar to the Project, operation of this alternative has the potential to create air quality impacts, primarily associated with mobile and area sources. Motor vehicle traffic would include daily employee trips, visitor trips, vender delivery trucks, and waste management trucks. Since the Increased Housing Alternative would result in fewer vehicle trips, the operational air quality impacts would be reduced. As discussed in the alternatives traffic analysis, ADT associated with the Increased Housing Alternative would be 120,690, which is 14 percent less than the Project (Scheme B).

Operation of the Project would generate daily exhaust emissions of ROG, NO_X, PM10, and PM2.5 in excess of the BAAQMD's significance thresholds. Based on mitigated operational criteria-pollutant emissions (including Mitigation Measures GHG-1.2 and TRA-1.1), by gross square footage or by daily trips, the Increased Housing Alternative's operational emissions would exceed the BAAQMD thresholds for ROG, NO_X, PM10 and PM2.5. Although this alternative's criteria-pollutant emissions would be less than those of the Project (because of fewer daily trips), they would still be significant. Similar to the Project, mitigation measures related to GHG (GHG-1.2) and transportation (TRA-1.1) would reduce the impact but not to below the BAAQMD thresholds. Therefore, impacts would be significant and unavoidable. (SU)

Generation of Regional Criteria Pollutant Emissions During Combined Project Construction and Operation. Similar to the Project, construction of the Increased Housing Alternative would occur in

phases, with certain areas beginning to operate while other areas are under construction. Similar to the Project, implementation of Mitigation Measures AQ-2.1 through AQ-2.4 would reduce construction emissions and Mitigation Measures GHG-1.2 and TRA-1.1 would reduce operational emissions associated with the Increased Housing Alternative but not below BAAQMD thresholds. Therefore, this impact would be significant and unavoidable. (SU)

Exposure of Sensitive Receptors to Carbon Monoxide Hot-spots. Traffic generated by the Project would have the potential to create CO hotspots at nearby roadways and intersections. However, since the Increased Housing Alternative would generate less traffic than the Project, the CO emissions would be less than what is anticipated for the Project, as traffic volumes would be far below the congested traffic volume modeled by BAAQMD. Regardless, for both the Project and the Increased Housing Alternative, CO concentrations are not expected to contribute to any new localized violations of the 1-hour or 8-hour ambient air quality standards, resulting in less-than-significant impacts. (LTS)

Construction TAC Emissions. Diesel-fueled engines, which generate PM2.5 and DPM, would be used during construction of the Increased Housing Alternative, similar to the Project. Multiple sensitive receptors are located both within 1,000 feet of the Project site, including single-family residences in each direction as well as various parks, schools, and places of assembly near the Project site. Additionally, new receptors would occupy the Project area while subsequent phases of construction would occur. Construction of the Increased Housing Alternative would result in similar construction and duration as the Project, thus concentrations and risk would be similar. Similar to the Project, construction of this alternative would not result in significant increases in annual PM2.5 concentrations at sensitive receptors but would result in exceedance of the BAAQMD cancer risk thresholds related to DPM exposure. Similar to the Project, Mitigation Measures AQ-2.1, AQ-2.2, and AQ-2.3 reduce construction DPM emissions, while Mitigation Measure AQ-6.1 includes installation of particulate filtration systems at residences and daycare centers on-site, as necessary. Similar to the Project, implementation of feasible mitigation would reduce impacts to a level below significance. Therefore, with mitigation, this impact would be less than significant. (LTS/M)

Operational TAC Emissions. Increased Housing Alternative operations would also result in vehicular TAC emissions that could affect sensitive receptors along off-site roadways affected by the project. Scaling based on square footage from the Project's emission impacts, this alternative would not result in exceedance of BAAQMD TAC thresholds. The Increased Housing Alternative operations would also result in exposure of on-site sensitive receptors to periodic TAC emissions from energy generator operations and loading dock truck emissions. Scaling based on square footage from the Project's emission impacts, this alternative would not result in exceedance of BAAQMD TAC thresholds. (LTS)

This alternative would also result in exposure of new residential and daycare receptors to existing TAC emissions, which, like the Project could be significant. Mitigation Measure AQ-7.1 would be required to provide filtration for HVAC systems that serve on-site residences and daycare centers that are exposed to TAC impacts that exceed BAAQMD project-level thresholds and would mitigate impacts to a less-than-significant level. (LTS/M)

Exposure of Sensitive Receptors to Asbestos During Construction. Asbestos is a naturally-occurring mineral that was previously used in building construction due to its heat resistance and strong insulating properties. As with the Project, asbestos impacts could occur if demolition of existing buildings containing asbestos or disturbance of any features exposes workers. The Increased Housing Alternative would comply with BAAQMD Regulation 11, Rule 2, which will control emissions of asbestos to the atmosphere during demolition activities. Accordingly, this impact would be less-than-significant. (LTS)

Objectionable Odors. Similar to the Project, potential odor sources from the Increased Housing Alternative construction include diesel exhaust from heavy-duty equipment, landfill off-gassing during excavating and regrading, diesel exhaust from weekly trash pick-up, and the use of architectural coatings during routine maintenance; limited odors may also result from residential cooking appliances during operations. Potential odors from disturbance of landfill would be similar to the Project because the footprint of construction is similar. Mitigation Measure HAZ-2.1 would ensure construction activities do not result in nuisance odors. Accordingly, this impact would be less-than-significant. (LTS/M)

Cumulative Impacts. This alternative would result in similar criteria air pollutant emissions to the Project which would contribute considerably to significant cumulative regional air pollutant levels. (SU)

This alternative would result in TAC emissions that would contribute to cumulative TAC exposure to on-site and off-site sensitive receptors. Because this alternative would be of a similar scale as the Project, the amount of TAC emissions would be similar. For on-site receptors, the cumulative exposure would be less than the BAAQMD cumulative thresholds. For off-site receptors, scaling using either square footage or daily trips and taking into account the non-project cumulative TAC emissions, there would be a cumulative impact to certain off-site residential receptors. For off-site park receptors, there would be a cumulative impact if scaling based on square footage, but if scaling based on daily trips, the cumulative PM2.5 level would be right at the cumulative threshold (since this alternative has fewer daily trips than the Project, the PM2.5 emissions contribution due to vehicles would be less). Like the Proposed Project, no feasible mitigation has been identified that would eliminate the significant cumulative impacts. (SU)

Greenhouse Gas Emissions

Greenhouse Gas Emissions. Construction of the Increased Housing Alternative would generate GHG emissions from mobile and stationary construction equipment exhaust, as well as employee and haul truck vehicle exhaust. Indirect emissions would be generated from water use for fugitive dust control.

Because the building area would be the same as that of the Project, the intensity of construction activities at a given time would be similar to the Project. BAAQMD's CEQA Guidelines do not recommend a GHG emission threshold for construction-related emissions. However, the BAAQMD does recommend implementation of BMPs to help control and reduce GHG emissions. Therefore, construction of the Increased Housing Alternative would not exceed thresholds. However, the Guidelines recommend implementation of BMPs to help control and reduce GHG emissions. Therefore, as with the Project, the construction of the Increased Housing Alternative is considered less than significant with implementation of Mitigation Measure GHG-1.1. (LTS/M)

Operation of the Increased Housing Alternative would generate fewer direct and indirect GHG emissions than the Project due to a shift from employees to residents, resulting in 14 percent less ADT than the Project. As a result, annual vehicular GHG emissions would be reduced relative to the Project. However, the Increased Housing Alternative would still generate an increase in direct and indirect GHG emissions over existing conditions. Similar to the Project, implementation of Mitigation Measures GHG-1.2 and TRA-1.1 would reduce operational GHG emissions associated with this alternative. Scaling mitigated operational GHG emissions, based on square footage or on daily trip generation, GHG emissions for the Reduced Intensity Alternative would not exceed the BAAQMD AB 32–based significance threshold for 2020 but would exceed the substantial progress efficiency metric established for 2030. Therefore, even after implementation of Mitigation Measures GHG-1.2 and TRA-1.1, this impact would remain significant and unavoidable. (SU)

Conflicts with Applicable Plans and Policies. Operation of the Increased Housing Alternative would be required to implement all applicable measures in the City's CAP as well as measures to address long-term GHG reductions, beyond those necessary to meet the BAAQMD AB 32–based thresholds for 2020. With implementation of Mitigation Measures GHG-1.2 and TRA-1.1, this alternative would implement GHG reduction measures that would facilitate the accomplishment of long-term goals of the State, as articulated in Executive Orders B-30-15 and S-03-05 (along with federal and State reduction efforts). Relative to plan and policy consistency, the alternative's impact would be less than significant. (LTS)

Noise

Impacts Not Evaluated in Detail. The area sited for development with the Project is the same as the general area sited for development under the Increased Housing Alternative; this site is not located in the vicinity of a private airstrip and would not expose people to excessive aircraft noise from a private airstrip. There would be no impact, and no mitigation is required. (NI)

Construction Impacts. The Increased Housing Alternative would involve the replacement of the 320,000 gsf of office space planned under the Project for the Parcel 4 portion of the City Center (Scheme A) with 320,000 gsf of residential space. The Increased Housing Alternative would develop the same amount of area as the Project (9,164,400 gsf of building area). Overall, the intensity and location of construction under this alternative would be very similar to that of the Project, as this alternative would involve the same types of construction equipment and similar worst-case distances to noise sensitive land uses as the Project. As with the Project, the impact related to construction noise and vibration for the Increased Housing Alternative would be potentially significant. Implementation of Mitigation Measures NOI-1.1 (construction noise control plan to reduce construction noise) and NOI-2.1 (pile-driving restrictions), however, would reduce construction noise and vibration impacts to less-than-significant levels. (LTS/M)

Traffic Noise Impacts on Off-site Receptors. The Increased Housing Alternative would result in the development of 320 additional residential units as compared to the Project, for a total of approximately 1,680 residential units at the Project site. This alternative would result in approximately 4,030 new residents and 24,100 new employees as compared to the Project, which equates to (accounting for the existing employees that would be displaced by the alternative) a net increase of approximately 23,590 employees. The Increased Housing Alternative would result in a total of 120,690 daily trips, which is similar to the trips associated with Scheme A of the Project (123,040 trips); however, this number of daily trips is an approximately 14 percent reduction from the total trips associated with Scheme B of the Project. Because the Increased Housing Alternative would only generate approximately 86 percent of the total vehicle trips generated by the Project (an approximately 14 percent reduction), the associated traffic noise would increase slightly less with this alternative than with the Project. As explained in Section 3.6, *Noise*, the Project would result in significant impacts related to traffic noise along a roadway segment if the resulting traffic noise level exceeds the applicable land use compatibility standard for the adjacent land use (55 L_{dn} for residential uses and 65 L_{dn} for commercial uses) and the project-related increase is 3 dBA or greater. The Project would result in a significant noise impact only along one roadway segment (Lafayette Street between Tasman Drive and Hogan Drive) since the noise level would increase by 3 dBA. Since the Increased Housing Alternative would result in 14 percent less traffic than the Project, the increase in noise levels along the roadway segment is expected to be less than the Project. Therefore, this alternative would not exceed the threshold, resulting in a less-than-significant impact, compared to a significant and unavoidable impact with implementation of the Project. (LTS)

Roadway/Rail Noise and Vibration Impacts on On-site Receptors. With regard to rail noise, proposed development areas associated with the Increased Housing Alternative would be located at the same distances from the UPRR tracks, the light-rail tracks, Tasman Drive, and Lafayette Street as they would be under the Project because only development in Parcel 4 would change with implementation of this alternative. The residential land uses located in the eastern portion of Parcel 5 are the closest sensitive land uses to the UPRR and light rail tracks (and the adjacent roadways) for both the Project and for the Increased Housing Alternative. Impacts related to the noise from roadway traffic, UPRR and light rail would be significant under this alternative, as they were assessed to be with Project implementation. Implementation of Mitigation Measure NOI-1.3 (noise control plan to reduce interior noise at sensitive land uses) would reduce noise impacts from UPRR noise and light rail noise to a less-than-significant level. (LTS/M)

Similarly, and as with the Project, impacts related to ground-borne vibration for this alternative from the UPRR tracks would be conservatively assessed as potentially significant for the podium residential land uses proposed in the eastern portion of Parcel 5. Implementation of Mitigation Measure NOI-2.2 (vibration control plan to reduce rail vibration at sensitive land uses) would reduce this impact to a less than significant level. (LTS/M)

Operational Noise Impacts from Stationary Sources. As with the Project, the Increased Housing Alternative would locate commercial uses adjacent to residential uses; stationary sources associated with commercial uses could result in noise levels in excess of the City's exterior noise limits. Noise impacts associated with the exposure of new residences to stationary sources of noise is therefore significant with the Increased Housing Alternative. Implementation of Mitigation Measure NOI-1.3 would ensure that potential noise impacts would be addressed through design (i.e., enclosures around noise-generating equipment, setbacks to maximize distance to residences, and noise-reducing treatments in new buildings) and would reduce this impact to a less-than-significant level. (LTS/M)

New residences and hotel occupants living at the Increased Housing Alternative site would also be exposed to elevated noise levels from stadium events. Noise from the stadium would occur at an elevation higher than the ground level, so it would not be feasible to mitigate noise from the stadium at outdoor residential areas using sound walls, and the only feasible mitigation would be the building acoustical treatments included in Mitigation Measure NOI-1.3. As with the Project, operational, noise impacts during stadium events would remain significant and unavoidable even with mitigation. (SU)

Impacts on On-Site Receptors from Public Use Airports. The Project area would be the same for the Increased Housing Alternative as it is under the Project, and would also be located 2.7 miles from SJC Airport. Although this is more than two miles from the airport, the Project area is included in the CLUP for the airport. Policy N-4, included in Regulatory Setting above, indicates that residential construction is not permitted within the 65 dB CNEL contour boundary unless it can be demonstrated that interior noise levels will be less than 45 dB CNEL and that there would be no outdoor residential activities areas. This impact would be potentially significant. Implementation of Mitigation Measure NOI-1.3 would reduce interior noise levels to 45 dB CNEL or less. However, it will likely not be possible to reduce noise levels at outdoor residential areas from aircraft overflights to less than 65 dB CNEL. This impact is significant and unavoidable. (SU)

Cumulative Impacts. As discussed in Section 3.6, *Noise*, cumulative impacts related to construction noise and vibration, as well as stationary source operational noise (HVAC, etc.), would be less than significant with implementation of Mitigation Measures NOI-1.1, NOI-1.3, NOI-2.1, and NOI-2.2. (LTS/M)

With regard to traffic noise effects, future regional growth to be developed within the Project vicinity would result in increases in traffic that would cumulatively increase traffic noise. Even with the up to 14 percent reduction from Project traffic volumes that could occur with the Increased Housing Alternative, cumulative Year 2040 traffic noise levels in the vicinity of the Project would be substantially increased (i.e., an increase in noise greater than 3 dBA L_{dn}) above existing traffic noise levels without the Project. Additionally, implementation of the Increased Housing Alternative would likely make a cumulatively considerable contribution by contributing more than 1 dBA L_{dn} or more to the overall traffic noise level increase. Therefore, the Project would have a cumulatively considerable contribution to a cumulative traffic noise impact. Implementation of Mitigation Measure NOI-1.2 would reduce the noise levels along the impacted roadway segments; however, implementation of this mitigation measure may not be feasible. Therefore, the Increased Housing Alternative's contribution to the cumulative traffic noise impact would remain cumulatively considerable. (SU)

Cultural Resources

Impact Not Evaluated in Detail. As with the Project, the Increased Housing Alternative would not cause a substantial adverse change in the significance of a historic structure because none of the existing buildings on-site are considered historic. Therefore, the Increased Housing Alternative would result in no impact to historic structures. (NI)

Impacts on Archaeological Resources. The presence of prehistoric archaeological sites in the Project vicinity suggests that there could be additional, previously undiscovered prehistoric archaeological resources in the vicinity of the Project area that could be affected by ground-disturbing activities. Accordingly, ground-disturbing activities during construction of the Increased Housing Alternative have the potential to encounter previously undiscovered archaeological resources. However, as with the Project, implementation of Mitigation Measures CR-1.1, CR-1.2, and CR-1.3 would reduce this impact to a less-than-significant level. (LTS/M)

Impacts on Paleontological Resources. The Increased Housing Alternative has the potential to directly or indirectly destroy a unique paleontological resource or site or unique geologic feature. Impacts on paleontological resources would depend on the depth, extent, and type of soil-disturbing activities that may occur as a result of construction, as well as the paleontological sensitivity of the materials underlying the site. Construction activities under the Increased Housing Alternative would be similar to the Project. Accordingly, this alternative could expose undisturbed deposits that may contain fossils, resulting in a potentially significant impact. However, Mitigation Measures CR-2.1, CR-2.2, and CR-2.3, as required for the Project, would reduce this impact to a less-than-significant level. (LTS/M)

Impacts on Human Remains. Although the Northwest Information Center background records search did not identify any human remains on the Project site, at least one human burial has been identified within 0.5 mile of the Project site. Therefore, the potential may exist for previously undiscovered human remains to be encountered during construction of the Increased Housing Alternative. However, Mitigation Measure CR-3.1, required for the Project, would reduce this impact to a less-than-significant level. (LTS/M)

Cumulative Impacts. Because all historical resources are unique and nonrenewable members of finite classes, all adverse effects or negative impacts erode a dwindling resource base. For this reason, the cumulative effects of development in the region on historical resources are considered significant. However, since the existing buildings at the Project site are not considered historic, the Increased Housing Alternative would not contribute to any potential cumulative impact on historical resources.

Given that known prehistoric resources have been identified within 0.5 mile of the Project site, there is the possibility that previously undiscovered archaeological resources, paleontological resources, and human remains, could be encountered during construction. All significant archaeological resources, paleontological resources, and human remains are unique and nonrenewable resources. Therefore, the cumulative effects of all development on these resources are considered potentially significant. However, compliance with Mitigation Measures CR-1.1, CR-1.2, CR-1.3, CR-2.1, CR-2.2, CR-2.3, and CR-3.1 would reduce the Increased Housing Alternative's contribution to the cumulative impact to less than cumulatively considerable and would reduce the potentially significant cumulative impacts associated with the loss of archaeological and paleontological resources and the disturbance of human remains to a less-than-significant level, similar to the cumulative impacts Project. (LTS/M)

Biological Resources

Impacts Not Evaluated in Detail. As with the Project, the Increased Housing Alternative would not result in the direct loss or damage to special-status plants, potentially interfere with migration routes of nursery sites for common species, or conflict with a HCP or NCCP. The Increased Housing Alternative would result in no impact to these resources. (NI)

Interference with Movement of Native Migratory Wildlife Species. Existing shrubs and trees on the Project site could provide nesting habitat for a variety of migratory birds. As with the Project, the Increased Housing Alternative would demolish existing buildings at the Project site, remove existing landscaping, and develop the site with new buildings and landscaping. If nesting migratory birds are present, tree and shrub removal associated with the Increased Housing Alternative could result in the loss of those migratory birds caused by direct mortality of adult or young birds, nest destruction, or disturbance of nesting native migratory bird species. However, Mitigation Measure BIO-1.1, required for the Project and also applicable for this alternative, would prohibit vegetation removal during the nesting season and establish a no-disturbance buffer around active nests if discovered.

The Increased Housing Alternative would also introduce buildings with greater mass, scale, and height to the Project site as compared to the existing on-site structures. Injury or death to birds could result from collisions with these buildings due to transparent or reflective glass and from improper lighting at the Project site, which could misdirect or confuse birds during flight. As with the Project, the Increased Housing Alternative would introduce buildings of up to approximately 17 stories, which would provide a building surface where collisions could occur. Mitigation Measure BIO-1.2, required for the Project, would involve implementing bird-safe design standards into building and lighting design. However, as with the Project, it is unknown whether Mitigation Measure BIO-1.2 would be sufficient to mitigate impacts related to bird collisions. As such, this impact is considered significant and unavoidable, although to a lesser extent than the Project since fewer buildings would be constructed or the building heights would be shorter. (SU)

Impacts on Special-Status Species – Burrowing Owls. The land cover types on the Project site that provide habitat for burrowing owls include annual grassland and ruderal land cover types. Although no nesting burrowing owls were observed on the Project site, the presence of nesting burrowing owls in the vicinity of the Project site (less than 1 mile away) and the use of habitat on the Project site in the past suggest the possibility that burrowing owls could move back onto the Project site at some point in the future, prior to development, and begin nesting. In this situation, as with the Project, development of the Increased Housing Alternative would result in the loss of occupied burrowing owl nesting habitat and potentially the direct loss of burrowing owls or their nests. Mitigation Measures BIO-2.1 and BIO-2.2, as required for the Project and applicable to this alternative, would involve burrowing owls

detection surveys, avoidance during the nesting season, relocation where applicable, and replacement of burrowing owl habitat. As with the Project, the Increased Housing Alternative would result in less-than-significant impacts with implementation of these mitigation measures. (LTS/M)

Impacts on Special-Status Species – Western Pond Turtles. Suitable habitat for the western pond turtle on and adjacent to the Project site includes the retention pond and drainage swale on the northern part of the site, the ponds within the golf course, San Tomas Aquino Creek, and the Guadalupe River. As with the Project, if western pond turtles are present in the aquatic habitat within the construction footprint of the Increased Housing Alternative, they could be injured or killed inadvertently by equipment used during the construction period. Mitigation Measure BIO-3.1, as required for the Project and applicable to this alternative, would involve preconstruction surveys and establishing buffer zones for the western pond turtle. As with the Project, the Increased Housing Alternative would result in less-than-significant impacts with implementation of this mitigation measure. (LTS/M)

Impacts on Special-Status Fish Species and Critical Habitat. Special-status fish species are present in the Guadalupe River reach adjacent to the Project site when flows are high enough to provide adequate passage. Steelhead and Chinook salmon use the Guadalupe River as a migratory route to upstream spawning habitat. Critical habitat for steelhead is present in the Guadalupe River. Construction of the Increased Housing Alternative, as with the Project, could result in noise, vibration, artificial light, and other physical disturbances adjacent to the Guadalupe River that could harass fish, disrupt, or delay normal activities, and cause injury or mortality. Injury or mortality may result from direct and indirect contact with humans and machinery, vibration, sound pressure, and physiological stress. Mitigation Measure BIO-4.1, as required for the Project, would protect steelhead and fall-run Chinook salmon and their critical habitat during construction, operation, and maintenance activities on the Guadalupe River riverbank.

As with the Project, runoff from construction activities associated with the Increased Housing Alternative could temporarily degrade water quality and aquatic habitats in San Tomas Aquino Creek and the Guadalupe River. Special-status fish species present in the Guadalupe River could be adversely affected by excessive sediment deposits, increased turbidity, and exposure to construction contaminants including toxic substances that can increase fish mortality, reduce feeding opportunities for fish, and cause fish to avoid important habitat. The Increased Housing Alternative, as with the Project, would be required to comply with the Construction General Permit as well as standard erosion control measures and other BMPs identified in a SWPPP. These measures would be implemented during construction of the Increased Housing Alternative to reduce potential contamination of waterways.

Similar to the Project, the Increased Housing Alternative could result in increased pollutants in operational stormwater runoff due to an increase in the amount of impervious surfaces on-site. The stormwater runoff may contain contaminants that could affect water quality in San Tomas Creek and the Guadalupe River as well as steelhead, Chinook salmon, and other native fish species with the potential to be present in either channel. The Increased Housing Alternative, as with the Project, would be required to comply with San Francisco Bay Municipal Separate Storm Sewer Systems Permit, Provision C.3, Stormwater Technical Guidance (SF Bay MS4 Permit) which would mitigate impacts to biological resources resulting from operational stormwater runoff. As with the Project, the Increased Housing Alternative would result in less-than-significant impacts with implementation of Mitigation Measure BIO-4.1 and compliance with the SWPPP, Construction General Permit, and SF Bay MS4 Permit. (LTS/M)

Substantial Effect on Wetlands and Other Waters. Currently, there are 6.7 acres of ponds and wetlands, as well as a drainage ditch, on the Project site. In addition, San Tomas Aquino Creek and the

Guadalupe River are adjacent to the site. As with the Project, some aquatic land cover types would be lost, altered, or affected during construction activities for the Increased Housing Alternative. Waters of the U.S. and waters of the State could also be indirectly affected by erosion and stormwater runoff from construction activities, resulting in a temporary increase in sediment load and degrading the water quality of receiving waters. However, implementation of Mitigation Measure BIO-5.1 and BIO-5.2, as required for the Project, would protect the retention pond and drainage swale aquatic habitat during construction and require compensation for the loss of wetland resources. Further, as with the Project, the Increased Housing Alternative would also comply with the SWPPP and SF Bay MS4 Permit. Therefore, impacts associated with the Increased Housing Alternative would be reduced to a less-than-significant level. (LTS/M)

Conflicts with Local Policies or Ordinances Protecting Biological Resources. The Project could remove up to 951 protected trees in the Project area, up to approximately 153 protected trees at the Tasman East industrial/office development, and up to 79 protected trees at the Santa Clara Convention Center. The Increased Housing Alternative would likely result in the same amount of trees removed as compared to the Project. Removal of these trees would be required to adhere to the City's General Plan, *Policy 5.3.1-P10,* which requires the replacement of trees at a ratio of 2:1 (replaced/lost). Therefore, as with the Project, the Increased Housing Alternative would not conflict with any local policies protecting biological resources, and impacts would be less than significant. (LTS)

Cumulative Impacts. As discussed in Section 3.8, *Biological Resources*, cumulative impacts with respect to biological resources would be less than significant with the implementation of Mitigation Measures BIO-1.1, BIO-1.2, BIO-2.1, BIO-2.2, BIO-3.1, BIO-4.1, BIO-5.1, and BIO-5.2. Because this alternative is conservatively assumed to involve the same amount of tree removal, the same amount of building demolition, and less building footprint impacts compared to the Project, the same less-than–cumulatively-considerable impacts would occur. As with the Project, the Increased Housing Alternative would also result in increased vehicle emissions, which would contribute to cumulative nitrogen deposition impacts on serpentine grassland habitat and supported special-status species. Implementation of Mitigation Measure BIO-C.1 (payment of nitrogen deposition fee) would reduce associated impacts to a less-than-significant level. (LTS/M)

Geology and Soils

Impact Not Evaluated in Detail. As with the Project, the Increased Housing Alternative would not use septic tanks and alternative wastewater systems. Therefore, the Increased Housing Alternative would not require soils that would be capable of supporting septic systems, and consequently, there would be no impact. (NI)

Soil Erosion. Grading activities on the Project site associated with the Project are anticipated to affect approximately 1.73 million cy of materials. This would result in large areas of soils (including top soils, subsoils, and unconsolidated sediments) and refuse that would be exposed and may potentially allow erosion from wind and stormwater runoff to occur. The Increased Housing Alternative would result in the same size building footprint as compared to the Project.

With the substantial amount of material that would be disturbed during grading activities associated with the Increased Housing Alternative, this would result in a significant impact related to soil erosion. Further, as with the Project, excavation and grading activities would be conducted in close proximity to the Guadalupe River and San Tomas Aquino Creek, and could result in discharges of sediment-laden runoff to these receiving waters. However, implementation of Mitigation Measure GEO-1.1, as required

for the Project, would ensure that all construction-related earthwork activities would be in compliance with CCR 21190 et seq. Further, as with the Project, the Increased Housing Alternative would also comply with the Construction General Permit, which would prevent the entrainment of soils and refuse in stormwater runoff during construction. Impacts associated with the Increased Housing Alternative would be reduced to a less-than-significant level. (LTS/M)

Unstable Soils. The preliminary geotechnical investigation for the Project site indicates that underlying soils on and adjacent to the Project site could exhibit unstable characteristics such as settlement, liquefaction, slope instability, expansive soils, or corrosive soils. Given the heterogeneous nature of the refuse underlying the Project site, it is likely that induced settlement of the refuse would be uneven with the new placement of fill proposed by the Increased Housing Alternative, creating lateral forces on buildings, utilities, and other improvements that could threaten their structural integrity. The placement of new structures, including residential and commercial buildings, in areas that are subject to liquefaction could expose people to injury or death and could result in substantial damage to valuable improvements (e.g., buildings, infrastructure, and roadways). The relatively steep slopes on the Project site may also be unstable under existing conditions, and slope instability could be increased if new loads (e.g., fills, buildings) are placed on top of these slopes. Soils underlying the Project site may have moderate to high shrink-swell (expansive) potential, and if not properly managed, these soils could pose a geotechnical hazard to proposed building foundations and utilities constructed in these soils. Further, soils underlying the Project site and materials within the refuse layers may potentially be classified as corrosive and could corrode construction materials, such as concrete, pipeline materials, and electrical equipment and instrumentation, causing damage to infrastructure.

As with the Project, the potential for the Increased Housing Alternative's buildings and improvements to be damaged by slope instability and unstable soils would be a significant impact. Mitigation Measures GEO-2.1 through GEO-2.6, as required for the Project, would reduce potential impacts associated with the Increased Housing Alternative by requiring additional geotechnical investigation, developing specific design measures to address each of the identified geologic hazards, and implementing the specified design measures during construction and a Site Operation, Monitoring, and Maintenance Plan. Therefore, as with the Project, the Increased Housing Alternative would result in less-than-significant impacts related to unstable soils. (LTS/M)

Strong Seismic Groundshaking. The Increased Housing Alternative would expose approximately 4,030 new residents and 23,610 net new employees to potential seismic ground shaking at the Project site. The risks to public safety from seismic hazards can be mitigated to the extent required by law with implementation of the proper design and construction methods, which would be within the responsibility of the City and the Project Developer to monitor and enforce through its building permit process. As with the Project, buildings and improvements proposed under the Increased Housing Alternative would be constructed in accordance with the latest CBC standards, as required by the Santa Clara City Code. Structures built under the Increased Housing Alternative, as with the Project, would be required to meet the seismic design parameters of the CBC, as enforced by the City Building Official. The current CBC represents the best available guidance for design and construction to limit seismic risk. Consequently, the Increased Housing Alternative, as with the Project, would result in less-than-significant impacts with regard to the exposure of people or structures to damage resulting from seismic ground shaking. (LTS)

Cumulative Impacts. Soil and geologic conditions are site-specific and there is little, if any, cumulative relationship between the Project site and other areas in the City. As such, the potential for cumulative impacts to occur is geographically limited for many geology and soils impact analyses. Similar to the

Project, the Increased Housing Alternative would have a less-than-significant potential to cause cumulatively substantial erosion impacts. Construction and operational activities employed in the Increased Housing Alternative would be subject to the same regulations as the Project. Consequently, cumulative impacts would be less than significant. (LTS)

Hydrology and Water Quality

Impact Not Evaluated in Detail. As with the Project, the Increased Housing Alternative is not located within a tsunami inundation area, there are no reservoirs adjacent to the Project site, and the Project site is not within a designated landslide area. The Increased Housing Alternative would not be subject to impact related to flooding by seiche, tsunami, or mudflow and there would be no impact. (NI)

Violation of Water Quality Standards or Waste Discharge Requirements. As with the Project, construction activities associated with the Increased Housing Alternative would include site clearing and grubbing, demolition and removal of existing structures and pavement, cut and fill activities, grading and excavation, paving, building construction, tree removal, and landscaping. Land-disturbing activities and placement of stockpiles within proximity to storm drain inlets may also result in a temporary increase in sediment loads to receiving waters and impact receiving surface waters. The Increased Housing Alternative, as with the Project, would be required to comply with the Construction General Permit as well as standard erosion control measures and other BMPs identified in a SWPPP.

Construction of the Increased Housing Alternative could temporarily modify the existing low-permeability land cover, which is intended to prevent precipitation and stormwater runoff from infiltrating into and through the underlying waste. Grading and excavation activities could allow precipitation and runoff to infiltrate into the underlying waste impacting groundwater quality. As with the Project, the Increased Housing Alternative would be required to comply with applicable requirements to prevent migration of leachate groundwater into uncontaminated aquifers; the disposal of potentially dewatered leachate and natural groundwater to the sanitary sewer system; and the lack of groundwater use for water supply. Therefore, as with the Project, construction activities associated with the Increased Housing Alternative would be less than significant in regards to surface water and groundwater quality. (LTS)

As with the Project, the Increased Housing Alternative would develop the Project site with office, hotel, mixed-used retail, restaurant, entertainment, residential use, as well as associated parking and site access. Development of the Project site under the Project would increase impervious areas from approximately 10 percent of the site (existing conditions) to approximately 51 percent of the site (under Project conditions). The Increased Housing Alternative would result in the same amount of impervious surfaces created compared to the Project and would thus result in the same amount of stormwater volumes during a rain event.

Similar to the Project, the Increased Housing Alternative would be required to comply with SCVWD regulations and reduce peak flows from the Increased Housing Alternative to pre-development conditions. The proposed storm drainage system for the Increased Housing Alternative would be similar to the Project's and would be capable of conveying the 10-year peak runoff as well as safely convey the 100-year event peak flows near storm drain pump systems. Mitigation Measure WQ-1.1, as required for the Project and also applicable to this alternative, would be implemented to reduce total runoff rates and associated pollutant discharges by removing pollutants from stormwater using methods, such as filtration, infiltration and sedimentation. Further, as with the Project, the Increased Housing Alternative would be required to comply with the SF Bay MS4 Permit Provision C.3 Stormwater Technical Guidance

and the SCVURPPP. Therefore, as with the Project, potential water quality impacts would be less than significant under the Increased Housing Alternative. (LTS/M)

Effects on Groundwater Supplies and Recharge. As with the Project, construction and operation activities associated with the Increased Housing Alternative would have essentially no impact on net deep infiltration and groundwater recharge. Most of the Project site is covered with soil over a low-permeability cover intended to prevent precipitation and stormwater runoff from infiltrating into and through the underlying waste. Thus, under existing conditions, the Project site does not contribute significantly to groundwater supplies by direct recharge through site soils. As with the Project, the Increased Housing Alternative would preserve the existing low-permeability cover so that the Project site recharge potential would remain essentially unchanged and would not pump groundwater for use as water supply. Therefore, as with the Project, construction and operation impacts on groundwater supplies and recharge would be less than significant. (LTS)

Changes to the Existing Drainage Patterns. Similar to the Project, construction activities associated with the Increased Housing Alternative would alter existing drainage patterns and could result in local (on-site) and temporary erosion and siltation during construction. Sediment transport to local drainage facilities such as drainage inlets, culverts, and storm drains could also result in reduced storm flow capacity, resulting in localized ponding or flooding during storm events. The Increased Housing Alternative, as with the Project, would be required to comply with the Construction General Permit as well as standard erosion control measures and other BMPs identified in a SWPPP. These measures would be implemented during construction of the Increased Housing Alternative to reduce potential contamination of waterways due to changes of the existing drainage pattern on-site.

As with the Project, the Increased Housing Alternative would alter the on-site drainage patterns with the development of the buildings, roadways, and open space areas that would modify the elevations of the Project site, thus altering the stormwater runoff pattern. The Increased Housing Alternative would create the same amount of impervious surfaces as the Project and would thus result in the same amount of stormwater runoff. The Increased Housing Alternative would include an on-site stormwater collection, detention, and potentially retention/re-use system consisting of a series of drainage inlet structures, piped conveyance systems, and treatment systems and cisterns. These alterations would not result in on-site or off-site erosion or siltation because the majority of surface area would be paved and, therefore, no sediment would be exposed and vulnerable to erosion. Mitigation Measure WQ-1.1, as required for the Project, would involve treating additional sources of runoff created by the Increased Housing Alternative with stormwater management measures. Further, as with the Project, the Increased Housing Alternative would also comply with the SWPPP, SF Bay MS4 Permit, and all applicable regulations pertaining to stormwater runoff. Impacts associated with the Increased Housing Alternative would be reduced to a less-than-significant level.

As with the Project, the Increased Housing Alternative would include a bridge crossing over San Tomas Aquino Creek. This bridge and the new outfalls within San Tomas Aquino Creek and the Guadalupe River may affect 100-year flood flows and cause changes to the existing channel morphology. Mitigation Measure WQ-3.1 would require the new bridge and outfall structures to be designed to avoid increases in the 100-year flow as well as creek bed/channel erosion. Mitigation Measure WQ-3.2 would require vegetation removal from the Retention Basin drainage swale. Further, with regulatory compliance and implementation of Mitigation Measure WQ-1.1, impacts associated with the Increased Housing Alternative would be reduced to a less-than-significant level. (LTS/M)

Changes to Stormwater Runoff. Based on a preliminary evaluation of the drainage infrastructure for the Project, there is sufficient capacity to convey 100-year peak flows, and additional runoff from the Project would not increase 100-year flood elevations. The Increased Housing Alternative would likely result in the same amount of impervious surfaces as the Project and would thus result in the same amount of stormwater runoff. As with the Project, the Increased Housing Alternative would also likely abandon the existing storm system infrastructure serving the Project site (the Golf Course Club House Pump Station system) and upgrade the Eastside Storm Drain Pump Station. The final design for the stormwater management and storm drainage system upgrades would ensure that there is sufficient storm drain capacity for the Increased Housing Alternative. Mitigation Measure WQ-1.1, as required for the Project, would involve treating additional sources of runoff created by the Increased Housing Alternative with stormwater management measures. Further, the Increased Housing Alternative would adhere to all applicable federal, State, and local requirements associated with stormwater runoff. Therefore, as with the Project, the Increased Housing Alternative would result in less-than-significant impacts with implementation of Mitigation Measure WQ-1.1 and compliance with applicable regulations associated with stormwater runoff. (LTS/M)

Degradation of Water Quality. There are 6.7 acres of ponds and wetlands, as well as a drainage ditch, on the Project site. In addition, San Tomas Aquino Creek and the Guadalupe River are adjacent to the site. As with the Project, some aquatic land cover types would be lost, altered, or affected during construction activities for the Increased Housing Alternative. Waters of the U.S. and waters of the State could also be indirectly affected by erosion and stormwater runoff from construction activities, resulting in a temporary increase in sediment load and degrading water quality of receiving waters. However, implementation of Mitigation Measure BIO-5.1 and BIO-5.2, as required for the Project, would protect the retention pond and drainage swale aquatic habitat during construction and require compensation for the loss of wetland resources. Further, as with the Project, the Increased Housing Alternative would also comply with the SWPPP and SF Bay MS4 Permit. Impacts associated with the Increased Housing Alternative would therefore be reduced to a less-than-significant level. (LTS/M)

Impacts from Flooding in a Flood Hazard Area. The Increased Housing Alternative would add approximately 4,030 new residents and 23,610 net new employees to the Project site, which has the potential to expose additional people to flooding hazards from being located in a flood hazard area. The majority of the Project site is located within the FEMA-designation of Zone X, which is the 500-year flood zone and areas of minimal flood hazard. The eastern edge of Parcels 1 and 2, along a portion of the Eastside Drainage Channel and the Retention Basin, are identified as Zone AH, which is the 100-year flood zone and is indicative of shallow flooding. As with the Project, the Increased Housing Alternative's residential and commercial structures located within the Project site would not be located within the portions of parcels that are FEMA-designated 100-year flood zones. The Increased Housing Alternative would include the same off-site components (potential replacement of Fire Station 10 at the Option 2 location at the Santa Clara Convention Center parking lot and the Lick Mill Boulevard extension) as the Project. The Option 2 location of Fire Station 10 is not located within a FEMA-designated 100-year flood zone. As with the Project, a portion of the off-site Lick Mill Boulevard extension would be located within the 100-year flood Zone AH. In the event of a 100-year flood, the roadway would be flooded and access to the site may be restricted during large storm events. However, roadways are relatively resilient to infrequent flooding and readily repairable if damaged during such large events. As with the Project, impacts would be significant but limited to the period of the large storm event and immediately afterward. Implementation of Mitigation Measure WQ-6.1, as required for the Project, would protect Project-related roadways from flooding. Impacts associated with the Increased Housing Alternative would be reduced to a less-than-significant level. (LTS/M)

Impacts from Failure of a Levee or Dam. The Increased Housing Alternative would expose approximately 4,030 new residents and 23,610 net new employees to the potential dam failure inundation area for Anderson Dam and Reservoir and Lenihan Dam/Lexington Reservoir. As with the Project, portions of the Increased Housing Alternative parcels may be subject to inundation during levee or dam failure. The SCVWD and regulatory agencies including the California Division of Safety of Dams and the Federal Energy Regulatory Commission have put into place a storage restriction at Anderson Dam and Reservoir to prevent the uncontrolled release of water in case of a failure after a major earthquake. Although Lenihan Dam may incur some settlement during a major earthquake, the SCVWD has concluded that the dam structure overall would remain intact, and the potential for significant crack formation is low. Because the failure of the dam is considered remote, the Increased Housing Alternative, as with the Project, this impact would be less than significant. (LTS)

Cumulative Impacts. The Increased Housing Alternative would result in the same (or slightly less) hydrology and water quality impacts compared to the Project. Cumulative impacts under the Project, including water quality impacts, groundwater recharge and supplies, storm drain capacity, and flooding would result in less than cumulatively considerable impacts with mitigation. Accordingly, the Increased Housing Alternative would result in the same cumulatively considerable impact and require implementation of Mitigation Measures WQ-1.1 and WQ-6.1. (LTS/M)

Hazards and Hazardous Materials

Impacts Not Evaluated in Detail. As with the Project, the Increased Housing Alternative would not impact private airstrips or be subject to impacts from wildland fires. The Increased Housing Alternative would result in no impact related to these issues. (NI)

Routine Hazardous Materials Use. The Increased Housing Alternative would be required to comply with mandatory hazardous materials regulations and SWPPP requirements. Project construction would involve routine transport, use, and disposal of hazardous materials such as solvents, paints, oils, grease, and caulking. Compliance with applicable regulations would ensure that potential releases from the transport and use or disposal of hazardous materials during Increased Housing Alternative construction activities would be reduced to a less-than-significant level, similar to the Project.

During operation, it is anticipated that the Increased Housing Alternative would involve the routine use and handling of small quantities of commercially available hazardous materials, such as household cleaning, swimming pool/spa, and landscaping supplies, as well as diesel fuel for backup generators. The relocated Fire Station 10 would use similar types and quantities of hazardous materials as the existing fire station. Use, storage, and disposal of these materials would be regulated according to federal and State regulations and guidelines, the intent of which is to minimize the risk of upset. Therefore, the risk of accidental explosion or release of hazardous materials that could create a health hazard with the implementation of the Increased Housing Alternative is low, and impacts would be less than significant, similar to the Project. (LTS)

Accidental Release of Hazardous Materials during Demolition and Excavation Activities. As with the Project, the Increased Housing Alternative could result in potential upset and accident conditions associated with building demolition and excavation activities at the Project site. Demolition of buildings containing hazardous building materials on the Project site and in Tasman East for the Lick Mill Boulevard extension could release hazardous materials into the environment. However, based on the age of the buildings, asbestos-containing materials are not expected to be encountered during demolition. As with the Project, the Increased Housing Alternative would be required to comply with

applicable federal and State OSHA regulations regarding the handling and disposal of hazardous waste. Because compliance with existing regulations would be mandatory, the Increased Housing Alternative, as with the Project, would have a less-than-significant impact on the public or the environment during building demolition activities. (LTS)

Excavation activities associated with the Increased Housing Alternative would be expected to penetrate into the waste units (i.e., encounter landfill waste). As with the Project, these penetrations into the waste units could expose construction workers to landfill waste (e.g., trash and debris), contaminated soil, airborne dust, and landfill gas. These materials may contain total petroleum hydrocarbons, VOCs, metals, hydrogen sulfide, and methane gas at levels that could present health risks to construction workers. As with the Project, the risk assessment indicates that no unacceptable cancer and non-cancer risks would be posed to construction workers exposed to COPCs in soil at the Project site. Further, Mitigation Measure HAZ-2.1, as required for the Project, would mandate additional safety measures outlined in the draft *Waste Management Plan* be implemented during excavation activities to further protect construction workers. Therefore, as with the Project, the Increased Housing Alternative would have a less-than-significant impact on construction workers during excavation and construction activities. (LTS/M)

Proximity to Sensitive Receptors at Schools. The Increased Housing Alternative, similar to the Project, could emit hazardous emissions or involve the handling of hazardous materials within 0.25 mile of existing schools. The closest school is Kathryn Hughes Elementary School, which is located about 0.2 mile to the southeast of the Project site. Sources of hazardous emissions during construction and operation of the Increased Housing Alternative would include DPM and PM 2.5 from vehicle exhaust and operations, operation of emergency generators, and landfill gas emissions from the LGTE plant. As discussed under Section 3.4, *Air Quality*, these emission sources would have a less-than-significant impact on the school. Further, all hazardous materials used during construction and operation would be managed in accordance with applicable laws and regulations. Therefore, as with the Project, emissions and handling of hazardous or acutely hazardous materials during construction and operation of the Increased Housing Alternative would have a less-than-significant impact on nearby schools. (LTS)

Landfill Hazards – Hazardous Materials. Parcels 1, 2, 3, and 4 are located on a closed landfill, which is a hazardous materials site included on the Cortese List. These identified parcels contain baseline concentrations of methane gas, hydrogen sulfide gas, and volatile COPCs (benzene, ethylbenzene, TCE, and vinyl chloride) in landfill gas that could pose potentially significant hazards to human health. As with the Project, the Increased Housing Alternative could result in potential health risks to groundskeepers, indoor commercial workers, and residents at areas of the Project site underlain by refuse. Mitigation Measures HAZ-4.1, HAZ-4.2, HAZ-4.3, HAZ-4.4, HAZ-4.5, and HAZ-4.6, as required for the Project, would require landfill protection measures to minimize exposure to subsurface hazardous materials. Therefore, as with the Project, the Increased Housing Alternative would have a less-than-significant impact related to contaminants in the site subsurface. (LTS/M)

Non-Landfill Hazards – Hazardous Materials. Soil and soil gases beneath Parcel 5 and the tennis courts located in the southwest portion of Parcel 4 have been impacted by hazardous materials. Like the Project, construction activities under Increased Housing Alternative could disturb contaminated soil and/or groundwater beneath the site and pose a potential threat to human health and the environment. Future site users (e.g., residents, commercial workers, maintenance workers) could potentially be exposed to hazardous materials by direct exposure to soils or soil gases that migrate into buildings. If subsurface hazardous materials are not properly managed on Parcel 5 and the southwest portion of Parcel 4 (which are non-landfill areas), development of the Increased Housing Alternative could have a

significant impact on human health and the environment. However, implementation of Mitigation Measures HAZ-5.1 and HAZ-5.2, as included for the Project, would reduce significant impacts related to contaminants in the subsurface on Parcel 5 and the southwest portion of Parcel 4 not underlain by refuse to a less-than-significant level. (LTS/M)

Leachate Collection and Removal Systems (LCRS). Mounding of leachate in the refuse, which can occur due to excessive leachate production and limited recovery, has not been previously observed at the Landfill. Currently, leachate is recovered only from one leachate riser, LR-1, located at Parcel 3. Similar to the Project, development of this alternative would disturb operation of the existing LCRSs on Parcels 1 and 3. Mitigation Measure HAZ-6.1, as required for the Project, would implement specific LCRS-proposed design elements, as outlined in the *Draft Technical Memorandum: Leachate Collection and Removal System.* Therefore, as with the Project, the Increased Housing Alternative would result in less-than-significant impacts to the LCRS. (LTS/M)

Aviation Hazard. The SJC is located about 2.8 miles southeast of the Project site. Parcels 3, 4, and 5 on the Project site are located within an Airport Influence Area due to height restrictions established by FAR Part 77. The Increased Housing Alternative's buildings would be generally the same heights as the Project's buildings. As with the Project, the Increased Housing Alternative would not be permitted to obstruct navigable airspace associated with the SJC. Therefore, as with the Project, the Increased Housing Alternative would have a less-than-significant impact related to aviation hazards at public-use airports. (LTS)

Impairment of Emergency Access or Emergency Plans. As discussed in Section 3.3, *Transportation*, the Project would increase traffic in the vicinity of the Project site. The Increased Housing Alternative would also increase traffic, but to a lesser extent than the Project since it would include more housing and fewer office uses, which generate more traffic. The Increased Housing Alternative would result in 120,690 daily trips, which is a 14.2 percent decrease as compared to the Project (Scheme B). The increase in daily trips could impact emergency access. The City's Local Hazard Mitigation Plan identifies the SCFD as the responsible coordinating agency for emergency response and describes evacuation procedures in the event of a major disaster within the City of Santa Clara. Emergency access to the Project site would be provided along Great America Parkway and Lafayette Street. As with the Project, implementation of the Increased Housing Alternative would not be expected to interfere with emergency response and evacuation procedures described in the adopted Local Hazard Mitigation Plan. Therefore, a less-than-significant impact would occur, similar to the Project. (LTS)

Landfill Hazards – Subsurface Fires. Parcels 1, 2, 3, and 4 are located on a closed landfill where aerobic decomposition or chemical oxidation of waste materials could result in a subsurface fire that could pose a potentially significant impact to human health and property. As with the Project, the Increased Housing Alternative would comply with BAAQMD Regulation 8, Rule 34, which requires wellheads for the landfill gas collection and removal system at the Project site to be sampled monthly for methane, oxygen, carbon dioxide, balance gas (primarily nitrogen), temperature, and vacuum pressure. These parameters can be useful for indicating potential subsurface fire events. Mitigation Measures HAZ-9.1, HAZ-9.2, and HAZ-9.3, as required for the Project, would implement a subsurface fire prevention, detection, and response plan; include subsurface fire prevention and detection measures; and provide guidance for subsurface fire suppression. Therefore, as with the Project, potential impacts from landfill fires would be less than significant under the Increased Housing Alternative. (LTS/M)

Cumulative Impacts. The cumulative setting for the Increased Housing Alternative for hazards and hazardous materials is the same as for the Project. Because the Increased Housing Alternative would

develop the Project site similar to the Project and would disturb the comparable amounts of soil, this alternative would have the same cumulative site-specific impacts regarding landfills siting hazards, aviation hazards, and impacts to emergency access and emergency plans. Development of the Increased Housing Alternative and other cumulative development could expose people or the environment to residual contaminants in soil and/or groundwater if measures are not implemented to control unintentional or inadvertent releases. Development of the Increased Housing Alternative and other cumulative development could also expose people to asbestos, lead, PCBs, or other hazardous materials in existing buildings that may be demolished, renovated, or rehabilitated if measures are not implemented to control unintentional or inadvertent releases. However, implementation of Mitigation Measures HAZ 2.1, HAZ-4.1 through HAZ-4.6, HAZ-5.1, HAZ-9.1 through HAZ-9.3, as required for the Project, and compliance with current regulatory standards, would reduce the Increased Housing Alternative's contribution to cumulative impacts to less than significant, similar to the Project. (LTS/M)

Population and Housing

Impact Not Evaluated in Detail. The Increased Housing Alternative would not displace any housing. As with the Project, the existing structures and off-site buildings to be demolished do not include any housing units. Therefore, the Increased Housing Alternative would not displace residents and there would be no impact related to the displacement of housing. (NI)

Population Growth. Construction of the Increased Housing Alternative would be similar in scale to the Project and would include site preparation and building demolition phases. As with the Project, construction of the Increased Housing Alternative would temporarily increase construction employment in the City. Although construction would occur over an extended period of time, the demand for construction employment would likely be met within the existing and future labor market in the City and the County and workers from outside the City or County would not be expected to relocate permanently. Therefore, as with the Project, construction of the Increased Housing Alternative is not anticipated to increase the population within the City or County substantially during the construction phase. Impacts are less than significant.

The Increased Housing Alternative would result in a residential population of approximately 4,030 new residents, which is 760 more residents compared to Scheme A and 3,550 more residents compared to Scheme B. Because the City's population is expected to grow by approximately 34,000 residents (27.8 percent) between 2015 and 2040, the Increased Housing Alternative would account for approximately 11.9 percent of the population growth over this 25-year period. Therefore, this alternative would account for more of the residential population growth than expected for the Project. As with the Project, because this growth is not anticipated in the City's General Plan or accounted for in regional planning efforts, the Increased Housing Alternative would result in significant secondary environmental impacts associated with the increase in population and the number of households in the City and the region. Although this Alternative would have less of an effect on the jobs-housing balance than the Project, it would still worsen the jobs-housing ratio compared with existing conditions as well as conditions that would result from the City's General Plan. As discussed in Section 3.3, *Transportation;* Section 3.4, *Air Quality;* and Section 3.5, *Greenhouse Gas Emissions*, the Project will result in significant and unavoidable operational traffic, air quality, and GHG emissions, due in part to more vehicular trips for commutes, resulting from a jobs and housing imbalance at the Project and in the City. (SU)

Displacement of People. The existing uses on the Project site and the off-site Tasman East industrial/office development employ approximately 510 employees (35 employees on the Project site and 475 employees off-site at Tasman East). As with the Project, the Increased Housing Alternative

would displace the 510 existing employees through the demolition of these existing structures associated with these uses. The approximately 32 employees that would be displaced due to the demolition of the Santa Clara Golf & Tennis Club, restaurant and banquet facility, and BMX track would not be significant enough to trigger the construction of replacement housing elsewhere. Existing employees at the Fire Station 10 (approximately 3 employees) and Tasman East industrial/office development (approximately 475 employees) could be accommodated by the replacement fire station or the office uses on the Project site proposed as part of the Increased Housing Alternative. Therefore, as with the Project, since the majority of the employees currently working on the Project site could be accommodated by the Increased Housing Alternative or within commuting distance, the Increased Housing Alternative would not displace a substantial number of people and would not necessitate the construction of replacement housing. Therefore, the impact would be less than significant. (LTS)

Cumulative Impacts. As with the Project, the cumulative setting for the Increased Housing Alternative for population and housing is the City of Santa Clara. The Increased Housing Alternative, in combination with other projected growth in the City, would increase population and housing in the City. Compared to the Project, the Increased Housing Alternative would result in an increase of approximately 4,030 new residents, which is 760 more residents compared to Scheme A and 3,550 more residents as compared to Scheme B. Tasman East, the only potential cumulative residential development in the vicinity of the Project site, would develop approximately 1,820 dwelling units, which were not anticipated for in the growth projections in the General Plan, and generate approximately 4,368 new residents. The Increased Housing Alternative and the Tasman East residential development would result in an increase of 8,398 in the City's residential population. Added to the current population of 120,973, this would result in a total City population of 129,371 persons in 2030, which would not result in an exceedance of ABAG population projections for the City in 2030. Thus, as with the Project, this cumulative impact would be less than significant. (LTS)

In terms of displacing substantial numbers of people, if cumulative projects were to displace large numbers of the existing employee population in the City without providing for replacement spaces or accommodation, the impact would be significant. The cumulative projects in the City are redevelopments and expansion of similar functions to their existing uses. It is likely that the cumulative projects would be able to accommodate any displaced employees at these sites within the proposed development in the City site or within commuting distance. As with the Project, the Increased Housing Alternative would displace 510 workers on-site and off-site at the Tasman East industrial/office development but most of the displaced workers could be accommodated by the Increased Housing Alternative or within commuting distances. Thus, as with the Project, the Increased Housing Alternative would not result in a considerable contribution to this cumulative impact. This impact is less than significant. (LTS)

Public Services

Fire Service Impacts. The Increased Housing Alternative would result in a residential population of approximately 4,030 new residents and a net increase of approximately 23,610 new employees. Compared to the Project, the Increased Housing Alternative would result in 760 more residents and 1,170 fewer employees compared to Scheme A and 3,550 more residents and 5,130 fewer employees compared to Scheme B. However, the Increased Housing Alternative would still represent an increase in on-site activity over existing conditions, and there could be more incidents requiring SCFD response. The Increased Housing Alternative, as with the Project, would degrade the existing service ratios due to an increase in the daytime population and the residential population at the Project site. This increase would require additional staff and resources to serve the increased activity. As with the Project, the

Increased Housing Alternative could retain the existing Fire Station 10 at its current location or relocate the existing station on-site or off-site. To maintain appropriate response times and ratios, existing SCFD firefighters may need to be shifted such that additional firefighters are assigned to Fire Station 10. Additional personnel needed to maintain the existing firefighter-to-resident ratio could be accommodated within Fire Station 10, especially if it is expanded beyond its existing size, and additional facilities would not be necessary. The Increased Housing Alternative's impact on fire services would be greater than that of the Project because of the increase in resident population, but would remain less than significant. (LTS)

Police Service Impacts. Similar to the Project, the Increased Housing Alternative would require an increased level of police services due to intensifying site activity; adding new residents, employees, and visitors; increasing square footage; and increasing the number of traffic incidents. With more on-site activity, there could be more incidents requiring police response. The Increased Housing Alternative, as with the Project, would degrade the existing officer-to-resident ratios due to additional on-site employees and residents and would require additional personnel and resources to serve the increased activity at the Project site. Compared to the Project, the Increased Housing Alternative would result in 760 more residents and 1,170 fewer employees compared to Scheme A and 3,550 more residents and 5,130 fewer employees compared to Scheme B. Similar to the Project, the Increased Housing Alternative would require additional personnel to maintain the existing officer-to-resident ratio. Whereas the Project would require four additional personnel to maintain the existing officer-to-resident ratio, the Increased Housing Alternative would require additional personnel to maintain the existing officer-to-resident ratio because of the additional residents generated under this alternative.[11] SCPD recently received approval to hire two officers and has plans to hire three additional officers, for a total of five new officers. As with the Project, the additional officers would be adequate for maintaining service levels under the Increased Housing Alternative. The need to accommodate additional officers and staff due to Increased Housing Alternative implementation may result in the need for additional equipment or redesign of existing SCPD facilities to resolve capacity issues. However, SCPD has no plans to add equipment or expand its current facility at 601 El Camino Real. Although additional SCPD staff members may be required, the Increased Housing Alternative would not trigger the need for the construction of a new police facility or the expansion of an existing one. Thus, the increased level of police services would not be large enough to trigger the need for the construction of new or expanded facilities that could adversely affect the physical environment or affect human health and safety. This alternative's impacts regarding police services would be less than the Project, due to the decrease in employee population compared to the Project, but would remain less than significant. (LTS)

School Impacts. The Increased Housing Alternative would result in the 320 additional residential units on-site compared to the Project. This alternative would generate slightly more elementary school students, middle school students, and high school students than the Project's residential development. Impacts from the Increased Housing Alternative generated students would be mitigated by the payment of the school impact fees established by SB 50 paid by the Project Developer. The Increased Housing Alternative's impacts regarding schools would be exactly the same as under the Project and would remain less than significant. (LTS)

[11] The Increased Housing Alternative would increase the residential population within the SCPD service area to approximately 124,275 residents. With 145 existing sworn officers, the Increased Housing Alternative would degrade the residential population ratio from 1.21 officers per 1,000 residents to 1.16 officers per 1,000 residents. To maintain the existing officer-to-resident ratio, the Increased Housing Alternative would require additional personnel.

Recreational Impacts. As with the Project, the Increased Housing Alternative could result in three types of impacts on parks and recreational facilities: (1) impacts associated with eliminating existing on-site active recreational facilities, (2) impacts associated with recreational demand from new residents and employees on existing off-site park and recreational facilities, and (3) the combined impacts associated with eliminating existing on-site active recreational facilities and impacts associated with recreational demand from new residents and employees. The closure of the existing on-site recreational facilities, specifically the golf course, restaurant and banquet facility, tennis courts, and BMX track, would force users to seek alternative recreational venues in the area. However, as discussed in Section 3.13, *Public Services,* under Impact PS-4, the current on-site facilities are slightly underutilized and if the users are distributed evenly, the large number of other existing venues in the area would have capacity to accommodate these users. Although the Increased Housing Alternative, as with the Project, would increase the use of other existing recreational facilities due to the closure of the on-site golf course, restaurant and banquet facility, tennis courts, and BMX track, this would not result in a substantial physical deterioration of these facilities within the City and neighboring cities because these facilities would have adequate capacity to accommodate users, resulting in a less-than-significant impact.

Implementation of the Increased Housing Alternative would also contribute to an increased demand for parkland because the Increased Housing Alternative would result in approximately 4,030 new permanent residents living on the Project site and 23,610 net new employees. New residents and employees could use the nearby park facilities, such as Fairway Glen Park, the Santa Clara Youth Soccer Park, the Ulistac Natural Area, the San Tomas Aquino/Saratoga Creek Trail, and the Guadalupe River Trail. However, as with the Project, the Increased Housing Alternative would provide on-site amenities such as entertainment facilities and large, shared open spaces throughout the Project site, which would reduce the likelihood of residents and employees utilizing or overburdening existing City facilities because outdoor areas would be available to employees and residents that would be closer than the existing open space areas. It is assumed that the proposed public open spaces on the Project site under the Increased Housing Alternative would be similar to those proposed as part of the Project. Based on the residential population generated by the Increased Housing Alternative, this alternative would be required to dedicate up to approximately 10.2 acres of parkland, in accordance with the Mitigation Fee Act. To the extent that the Project Developer is not able to fully satisfy the park requirement using on-site credits, the Project Developer would pay park in-lieu fees to satisfy the City's parkland dedication requirement.

Implementation of the Increased Housing Alternative, as with the Project, would result in the combined impacts of eliminating existing on-site active recreational facilities and the recreational demand from new residents and employees. As discussed above, implementation of the Increased Housing Alternative would reduce the recreational facilities within the City and region because the alternative would convert the existing recreational uses on-site into a new mixed-use development. Further, implementation of the Increased Housing Alternative would also contribute to an increased demand for parkland from the associated residents and employees. As with the Project, the recreational users that would be displaced by the Increased Housing Alternative and the new residents and employees that would be generated by the alternative would most likely use other nearby facilities with similar resources in Santa Clara, San José, Sunnyvale, and Milpitas. Although the use of these facilities would increase, this increase is not expected to result in the substantial physical deterioration of the facilities because the current on-site facilities are slightly underutilized, and if the users are distributed evenly, the large number of other existing venues, including golf courses, would have the capacity to accommodate these users. In addition, fees paid by the Project Developer would be used by the City to acquire and/or develop new parkland and/or amenities or facilities and mitigate any environmental impacts from development of those facilities. Thus, as with

the Project, the Increased Housing Alternative's impacts regarding recreation would be less than significant. (LTS)

Library Impacts. The Increased Housing Alternative would add residents to the Project site who could use the City's libraries. The Increased Housing Alternative would result in a residential population of approximately 4,030 new residents, which is 760 more residents compared to Scheme A and 3,550 more residents compared to Scheme B. Similar to the Project, the Increased Housing Alternative would degrade the existing library-space-per-resident ratio, the librarian-FTE-per-resident ratio, the book-volumes-per-capita ratio, as well as the library-items-per-capita ratio, although to a slightly greater extent than the Project because of the additional residents generated under this alternative. Specifically, the Increased Housing Alternative would degrade the library-space-per-resident ratio from 0.86 to 0.84 square feet of library space per resident, slightly degrade the librarian-FTE-per-resident ratio from one librarian FTE per 2,388 residents to one librarian FTE per 2,467 residents, and degrade the existing book-volumes-per-capita ratio from 3.22 to 3.12 book volumes per capita as well as the library-items-per-capita ratio from 3.68 to 3.56 library items per capita.[12] Further, the Increased Housing Alternative, as with the Project, would degrade the State average for the library-space-per-resident ratio to a level that would be below the State average and would result in the librarian-FTE-per-resident ratio falling below the State average of one FTE per 3,429 residents. However, as indicated in the City's General Plan EIR, future growth in the City may require additional library facilities. It is most likely that any new library facilities would be located on existing urban parcels given the City is mostly built out. The additional volumes and other library items required to maintain the book-volumes-per-capita ratio and library-items-per-capita ratio due to implementation of the Increased Housing Alternative would not necessitate construction of a new library facility. Therefore, the Increased Housing Alternative, as with the Project, would not result in substantial adverse physical environmental impacts associated with the provision of new or physically altered library facilities in order to maintain acceptable service ratios or other performance objectives. As such, library impacts as a result of the Increased Housing Alternative would be less than significant. (LTS)

Cumulative Impacts. The cumulative setting for the Increased Housing Alternative for public services is the same as for the Project. Cumulative development in the City would result in increased demand for fire services, police services, school facilities, parks, recreational facilities, and library facilities to accommodate growth. As with the Project, cumulative impacts to public services would be significant if the firefighter/police staff to resident ratio and service response time is degraded for fire and police services and new library facilities are not constructed to accommodate this growth. The Increased Housing Alternative would result in an increase of 4,030 new residents, which is 760 more residents compared to Scheme A and 3,550 more residents as compared to Scheme B. As with the Project, although additional firefighters and police staff are required for the Increased Housing Alternative to maintain the staffing to resident ratios, these staffing increases could be accommodated within existing facilities or within the proposed Fire Station 10. With the provision of the City's parkland dedication/payment of in-lieu and school impact fees, the cumulative impact on parks and recreation and schools would be less than significant. Therefore, as with the Project, the Increased Housing Alternative's cumulative impacts to public service providers would be less than significant. (LTS)

[12] The Increased Housing Alternative would increase the residential population within the SCCL service population to approximately 125,259 residents. As discussed in Section 3.13, *Public Services*, the City's libraries include the following resources: 104,770 square feet of libraries, 50.77 librarian FTEs, 390,357 books, and 446,123 total items.

Utilities and Service Systems

Water Demand. The Project's Scheme A would result in a total water demand of 1,911 afy and Scheme B would result in a total water demand of 1,921 afy. The Increased Housing Alternative would demand slightly less water than the Project since it would include more housing and fewer office uses, which generate a higher demand for water. Therefore, when taking into account other approved development and the water demand of the Increased Housing Alternative, along with existing demand, there is adequate projected water supply to provide water out to 2035 under normal year, single dry year, and multiple dry year scenarios, as with the Project. Therefore, as with the Project, implementation of the Increased Housing Alternative would have a less-than-significant impact on water supplies in SCVWD's service area and expansion of existing water supply entitlements would not be necessary to accommodate this alternative. (LTS)

Water Delivery System. Implementation of the Project would require the expansion of the City's water delivery system, including both on-site and some off-site locations, but would not require expansion of the recycled water system off-site. The Increased Housing Alternative would likely result in a similar expansion of the City's water delivery system compared to the Project because it is assumed that the building footprint of the Increased Housing Alternative would be identical to the Project. As with the Project, the Increased Housing Alternative would implement all relevant mitigation measures included in the EIR that apply to water line and recycled water line construction on- and off-site. Therefore, as with the Project, potential impacts to the City's water and recycled water delivery system would be less than significant with mitigation under the Increased Housing Alternative. (LTS/M)

Wastewater Generation. As with the Project, the Increased Housing Alternative would not exceed the wastewater treatment requirements of the San Francisco Regional Water Board or violate solid waste regulations. The Increased Housing Alternative would result in no impact related to these issues. (NI)

Implementation of the Project would result in a total ADWF of approximately 1.75 mgd and a total peak flow of approximately 4.6 mgd. The Increased Housing Alternative would generate slightly less wastewater than the Project since it would include more housing and fewer office uses, which generate more wastewater. No industrial wastewater would be generated by the Increased Housing Alternative as it involves the operation and maintenance of residential, commercial, office, hotel, and entertainment uses. As with the Project, a new wastewater system would be installed on-site to accommodate the flows generated by the Increased Housing Alternative, and no specific changes to the WWTF would be required to treat these flows.

Therefore, as with the Project, although the Increased Housing Alternative would have a less-than-significant impact related to wastewater treatment facilities and on-site wastewater delivery systems, the Increased Housing Alternative could contribute considerably to the need for additional off-site wastewater delivery systems related to future insufficient pumping capacity. This would be considered a considerable contribution to a significant cumulative impact. Mitigation Measure UT-3.1, as required for the Project, would be implemented to address the Increased Housing Alternative's contribution to a cumulative wastewater pumping capacity deficit. Therefore, as with the Project, potential wastewater infrastructure impacts during operation of the Increased Housing Alternative would be less than significant with mitigation. (LTS/M)

Stormwater Generation. Development of the Project site under the Project would increase impervious areas from approximately 10 percent of the site (existing conditions) to approximately 51 percent of the site (under Project conditions). The Increased Housing Alternative would create the same amount of impervious surfaces as the Project and would thus result in the same amount of stormwater volumes

during a rain event. As with the Project, the Increased Housing Alternative would be required to comply with SCVWD regulations and reduce peak flows from the Increased Housing Alternative to pre-development conditions. The proposed storm drainage system for the Increased Housing Alternative would be similar to the Project's and would be capable of conveying the 10-year peak runoff as well as safely convey the 100-year event peak flows near storm drain pump systems. Mitigation Measure WQ-1.1, as required for the Project, would be implemented to reduce total runoff rates and associated pollutant discharges by removing pollutants from stormwater using methods, such as filtration, infiltration and sedimentation. Further, as with the Project, the Increased Housing Alternative would be required to comply with the SF Bay MS4 Permit Provision C.3 Stormwater Technical Guidance and the SCVURPPP). Therefore, as with the Project, potential impacts to the City's storm drain system would be less than significant with mitigation under the Increased Housing Alternative. (LTS/M)

Solid Waste Generation. Demolition waste generated by construction of the Increased Housing Alternative would result in the same amount as the Project and would not constitute a substantial portion of the solid waste facility's daily permitted capacity. Therefore, the solid waste facilities that would serve the Project site during construction would be sufficient to accommodate the construction waste generated by the Increased Housing Alternative.

Assuming a 50 percent diversion rate, implementation of the Project would result in a total solid waste generation of approximately 8,972 tons per year that would be disposed of at the Newby Island Landfill. Since the Increased Housing Alternative would include more housing and fewer office uses, which generate more solid waste, solid waste generation under this alternative would be slightly less than the Project. The solid waste facilities that would serve the Project have sufficient remaining capacity to accommodate the Increased Housing Alternative. As with the Project, the Increased Housing Alternative would comply with the requirements of the Santa Clara Commercial and Residential Recycling Programs to help the City meet its waste diversion goal of 50 percent. This alternative would not contribute to the need to expand existing or construct new solid waste disposal facilities and would also result in less-than-significant impacts related to solid waste generation, similar to the Project. (LTS)

Energy Demand. Energy-saving features similar to those of the Project would be implemented for the Increased Housing Alternative. These features would result in an exceedance of California's Title 24 standards. Construction energy usage of this alternative would be reduced through the use of energy-efficient construction equipment and trucks and the use of alternative fuels. Design features implemented for this alternative and Mitigation Measure GHG-1.2, as included in Section 3.5, *Greenhouse Gas Emissions*, would result in a reduction in electricity and natural gas demand. Design features and Mitigation Measure TRA-1.1 (Section 3.3, *Transportation*) would result in operational transportation energy savings compared to a project that did not have the mixed-use characteristics, transit location, and TDM measures of the Project. Other measures would result in further reductions of operational energy consumption. As with the Project, the Increased Housing Alternative, with mitigation, would result in lower energy consumption compared to a similar size project that did not incorporate the same design feature and mitigation. Therefore, the Increased Housing Alternative would not result in inefficient, wasteful, or unnecessary consumption of energy. The impacts would be ***less than significant with mitigation***. (LTS/M)

Cumulative Impacts. The Increased Housing Alternative would result in the same (or slightly less) utilities and service system impacts compared to the Project. Cumulative impacts under the Project, including water demand, wastewater generation, stormwater generation, and solid waste generation would result in less than cumulatively considerable impacts. However, similar to the Project, this alternative would contribute to cumulative energy demands that may result in significant and

unavoidable secondary environmental impacts related to long-term energy generation and transmission. (SU)

5.7 Comparison of Impacts

See Table 5-12, below.

Table 5-12. Comparison of Impacts among Project Alternatives

		No Project Alternative 1		No Project Alternative 2		Reduced Intensity Alternative		Increased Housing Alternative	
Environmental Issue	Project	Significance	Comparison	Significance	Comparison	Significance	Comparison	Significance	Comparison
Land Use									
Physical division of an established community	NI	NI	=	NI	=	NI	=	NI	=
Conflict with a Habitat Conservation Plan or Natural Community Conservation Plan	NI	NI	=	NI	=	NI	=	NI	=
Conflicts with adopted City land use plans and policies with regard to the job/housing ratio	SU	NI	<	NI	<	SU	<	SU	<
Conflicts with airport land use plan and City policies related to airport noise	SU	NI	<	NI	<	SU	=	SU	>
Conflicts with adopted City land use plans and policies (other than jobs/housing balance and airport noise)	LTS	NI	<	NI	<	LTS	=	LTS	=
Cumulative impacts	SU	NI	<	NI	<	SU	=	SU	=
Aesthetics									
Impact on scenic resources along a State Scenic Highway	NI	NI	=	NI	=	NI	=	NI	=
Impact on scenic vistas	NI	NI	=	NI	=	NI	=	NI	=
Degradation of visual character or quality	LTS/M	NI	<	LTS	<	LTS/M	<	LTS/M	=
New sources of light and glare	LTS/M	NI	<	LTS/M	<	LTS/M	<	LTS/M	=
Cumulative impacts	LTS	NI	<	LTS	<	LTS	<	LTS	=
Transportation									
Trip Generation	SU	NI	<	SU	<	SU	<	SU	<
Intersection Impacts	SU	NI	<	SU	<	SU	<	SU	<
Bicycles, pedestrians, and transit	SU	NI	<	SU	<	SU	<	SU	<

Table 5-12. Comparison of Impacts among Project Alternatives

		No Project Alternative 1		No Project Alternative 2		Reduced Intensity Alternative		Increased Housing Alternative	
Environmental Issue	Project	Significance	Comparison	Significance	Comparison	Significance	Comparison	Significance	Comparison
Air Quality									
Conflict with Air Quality Plan	SU	NI	<	SU	<	SU	<	SU	=
Construction Criteria Air Pollutant Emissions	LTS/M	NI	<	LTS/M	<	LTS/M	<	LTS/M	=
Operational Criteria Air Pollutant Emissions	SU	NI	<	LTS/M	<	SU	<	SU	<
Emissions During Combined Project Construction and Operation	SU	NI	<	LTS/M	<	SU	<	SU	<
Exposure of Sensitive Receptor to Carbon Monoxide Hot-spots	LTS	NI	<	LTS	<	LTS	<	LTS	<
Exposure of Sensitive Receptors to TAC Emissions During Construction	LTS/M	NI	<	LTS/M	<	LTS/M	<	LTS/M	>
Exposure of Sensitive Receptors to TAC Emissions During Operations	LTS/M	NI	<	LTS/M	<	LTS/M	<	LTS/M	>
Exposure of Sensitive Receptors to Asbestos During Construction	LTS	NI	<	LTS	<	LTS	<	LTS	>
Objectionable Odors	LTS/M	NI	<	LTS/M	<	LTS/M	<	LTS/M	>
Cumulative impacts	SU	NI	<	SU	<	SU	<	SU	<
Greenhouse Gas Emissions									
Impacts from GHG Emissions	SU	NI	<	LTS	<	SU	<	SU	<
Conflicts with Applicable Plans and Policies	LTS/M	NI	<	LTS/M	>	LTS/M	<	LTS/M	<
Climate Change Impacts	NA	NA	NA	NA	NA	NA	NA	NA	NA
Noise									
Location within 2 miles of a private airstrip	NI	NI	=	NI	=	NI	=	NI	=
Construction impacts	LTS/M	NI	<	LTS/M	<	LTS/M	<	LTS/M	=
Traffic noise impacts on off-site receptors	SU	NI	<	LTS	<	LTS	<	LTS	<

Table 5-12. Comparison of Impacts among Project Alternatives

		No Project Alternative 1		No Project Alternative 2		Reduced Intensity Alternative		Increased Housing Alternative	
Environmental Issue	Project	Significance	Comparison	Significance	Comparison	Significance	Comparison	Significance	Comparison
Roadway/rail noise and vibration impacts on on-site receptors	LTS/M	NI	<	LTS/M	<	LTS/M	=	LTS/M	=
Operational noise impacts from stationary sources	SU	NI	<	SU	<	SU	=	SU	=
Impacts on on-site receptors from public use airports	SU	NI	<	SU	<	SU	=	SU	=
Cumulative impacts	SU	NI	<	LTS	<	SU	<	SU	<
Cultural Resources									
Impacts on historic structures	NI	NI	=	NI	=	NI	=	NI	=
Impacts on archeological resources	LTS/M	NI	<	LTS/M	<	LTS/M	=	LTS/M	=
Impacts on paleontological resources	LTS/M	NI	<	LTS/M	<	LTS/M	=	LTS/M	=
Impacts on human remains	LTS/M	NI	<	LTS/M	<	LTS/M	=	LTS/M	=
Cumulative impacts	LTS/M	NI	<	LTS/M	<	LTS/M	=	LTS/M	=
Biological Resources									
Loss or damage to special-status plants	NI	NI	=	NI	=	NI	=	NI	=
Potential interference with migration routes of nursery sites for common species	NI	NI	=	NI	=	NI	=	NI	=
Conflict with a Habitat Conservation Plan or Natural Community Conservation Plan	NI	NI	=	NI	=	NI	=	NI	=
Interference with movement of native migratory wildlife species	SU	NI	<	SU	<	SU	=	SU	=
Impacts on special-status species – burrowing owl	LTS/M	NI	<	LTS/M	<	LTS/M	=	LTS/M	=
Impacts on special-status species – western pond turtle	LTS/M	NI	<	NI	<	LTS/M	=	LTS/M	=
Impacts on special-status fish species and critical habitat	LTS/M	NI	<	NI	<	LTS/M	=	LTS/M	=

Table 5-12. Comparison of Impacts among Project Alternatives

		No Project Alternative 1		No Project Alternative 2		Reduced Intensity Alternative		Increased Housing Alternative	
Environmental Issue	Project	Significance	Comparison	Significance	Comparison	Significance	Comparison	Significance	Comparison
Substantial effect on wetlands and other waters	LTS/M	NI	<	NI	<	LTS/M	=	LTS/M	=
Conflicts with local policies or ordinances protecting biological resources	LTS	NI	<	LTS	<	LTS	=	LTS	=
Cumulative impacts	LTS/M	NI	<	LTS/M	<	LTS/M	=	LTS/M	=
Geology and Soils									
Septic tank and alternative wastewater systems	NI	NI	=	NI	=	NI	=	NI	=
Soil erosion	LTS/M	NI	<	LTS/M	<	LTS/M	=	LTS/M	=
Unstable soils	LTS/M	NI	<	LTS/M	<	LTS/M	=	LTS/M	=
Strong seismic ground shaking	LTS	NI	<	LTS	<	LTS	=	LTS	=
Cumulative impacts	LTS	NI	<	LTS	<	LTS	=	LTS	=
Hydrology and Water Quality									
Seiche, tsunami, or mudflow impacts	NI	NI	=	NI	=	NI	=	NI	=
Violation of water quality standards or waste discharge requirements	LTS/M	NI	<	LTS/M	<	LTS/M	=	LTS/M	=
Effects on groundwater supplies and recharge	LTS	NI	<	LTS	<	LTS	=	LTS	=
Changes to existing drainage patterns	LTS/M	NI	<	LTS	<	LTS/M	=	LTS/M	=
Changes to stormwater runoff	LTS/M	NI	<	LTS/M	<	LTS/M	=	LTS/M	=
Degradation of water quality	LTS/M	NI	<	LTS/M	<	LTS/M		LTS/M	=
Impacts from flooding in a flood hazard area	LTS/M	NI	<	LTS	<	LTS/M	=	LTS/M	=
Impacts from failure of a levee or dam	LTS	NI	<	LTS	=	LTS	=	LTS	=
Cumulative impacts	LTS/M	NI	<	LTS/M	<	LTS/M	=	LTS/M	=

Table 5-12. Comparison of Impacts among Project Alternatives

		No Project Alternative 1		No Project Alternative 2		Reduced Intensity Alternative		Increased Housing Alternative	
Environmental Issue	Project	Significance	Comparison	Significance	Comparison	Significance	Comparison	Significance	Comparison
Hazards and Hazardous Materials									
Private airstrips	NI	NI	=	NI	=	NI	=	NI	=
Wildland fires	NI	NI	=	NI	=	NI	=	NI	=
Routine hazardous materials use	LTS	NI	<	LTS	<	LTS	<	LTS	=
Accidental release of hazardous materials	LTS/M	NI	<	LTS/M	<	LTS/M	=	LTS/M	=
Proximity to sensitive receptors at schools	LTS	NI	<	LTS	<	LTS	=	LTS	=
Landfill hazards – hazardous materials	LTS/M	NI	<	LTS	<	LTS/M	=	LTS/M	=
Non-Landfill Hazards – Hazardous Materials	LTS/M	NI	<	LTS/M	=	<	=	LTS/M	=
Leachate collection and removal system impacts	LTS/M	NI	<	NI	<	LTS/M	=	LTS/M	=
Aviation hazard	LTS	NI	<	LTS	<	LTS	=	LTS	=
Impairment of emergency access or emergency plans	LTS	NI	<	LTS	<	LTS	<	LTS	<
Landfill hazards – subsurface fires	LTS/M	NI	<	NI	<	LTS/M	=	LTS/M	=
Cumulative impacts	LTS/M	NI	<	LTS/M	<	LTS/M	=	LTS/M	=
Population and Housing									
Displacement of housing	NI	NI	=	NI	=	NI	=	NI	=
Population growth	SU	NI	<	LTS	<	SU	<	SU	>
Displacement of people	LTS	NI	<	NI	<	LTS	=	LTS	=
Cumulative impacts	LTS	NI	<	LTS	<	LTS	<	LTS	>
Public Services									
Fire service impacts	LTS	NI	<	LTS	<	LTS	<	LTS	>
Police service impacts	LTS	NI	<	LTS	<	LTS	<	LTS	>
School impacts	LTS	NI	<	LTS	<	LTS	=	LTS	=

Table 5-12. Comparison of Impacts among Project Alternatives

		No Project Alternative 1		No Project Alternative 2		Reduced Intensity Alternative		Increased Housing Alternative	
Environmental Issue	Project	Significance	Comparison	Significance	Comparison	Significance	Comparison	Significance	Comparison
Recreational impacts	LTS	NI	<	LTS	<	LTS	<	LTS	>
Library impacts	LTS	NI	<	LTS	<	LTS	=	LTS	>
Cumulative impacts	LTS	NI	<	LTS	<	LTS	<	LTS	>
Utilities and Service Systems									
Water demand	LTS	NI	<	LTS	<	LTS	<	LTS	<
Water delivery system	LTS/M	NI	<	LTS/M	<	LTS/M	<	LTS/M	=
Wastewater generation	LTS/M	NI	<	LTS/M	<	LTS/M	<	LTS/M	<
Stormwater generation	LTS/M	NI	<	LTS/M	<	LTS/M	=	LTS/M	=
Solid waste generation	LTS	NI	<	LTS	<	LTS	<	LTS	<
Energy demand	LTS/M	NI	<	LTS/M	<	LTS/M	<	LTS/M	>
Cumulative impacts	LTS/M	NI	<	LTS/M	<	LTS/M	<	LTS/M	<

NI = No Impact
LTS = Less than Significant
SU = Significant Unavoidable
LTS/M = Less than Significant with Mitigation
= equal to
< less than
> greater than

5.8 Environmentally Superior Alternative

Section 21002 of the State CEQA Guidelines requires lead agencies to adopt feasible mitigation measures or feasible environmentally superior alternatives in order to substantially lessen or avoid otherwise significant adverse environmental effects, unless specific social or other conditions make such mitigation measures or alternatives infeasible. CEQA also requires that an environmentally superior alternative be identified among the alternatives analyzed. In general, the environmentally superior alternative is the project that avoids or substantially lessens some or all of the significant and unavoidable impacts of the proposed project (CEQA Guidelines Section 15126.6).

On the basis of comparing the extent to which the alternatives reduce or avoid the significant impacts of the Project, No Project Alternative 1 or 2 would be the environmentally superior alternative. However, if one of the No Project Alternatives is the environmentally superior alternative, the EIR must also specify which of the other build alternatives (including the Project) would be environmentally superior.

The Reduced Intensity Alternative would result in a smaller overall gross square footage of development (6.5 million gsf) compared to the Increased Housing Alternative and the Project (both 9.2 million gsf), which would lower the construction effort and construction period overall impacts on traffic, air quality, GHG emissions, noise, and lower operational demands for public services and utilities. While the gross square footage would be smaller, construction period disturbance impacts associated with erosion, water quality, and aesthetics would most likely be similar to the Increased Housing Alternative and the Project. The Reduced Intensity Alternative would result in fewer daily trips (94,240) compared to the Increased Housing Alternative (120,690) and the Project (140,730) and thus lower overall operational traffic, air quality, GHG, and traffic noise impacts than the Increased Housing Alternative and the Project. There are no resource areas for which the Reduced Intensity Alternative would have greater impacts than the Increased Housing Alternative or the Project. Thus, because it will notably have less construction and operational impacts than the other action alternatives, the Reduced Intensity Alternative is the environmentally superior alternative.

This Page Intentionally Left Blank

Chapter 6
Report Preparers

6.1 Lead Agency

City of Santa Clara

- Kevin Riley—Director of Planning & Inspection
- Debby Fernandez—Associate Planner
- Alexander Abbe—Assistant City Attorney
- Julio Fuentes—City Manager
- Ruth Shikada—Assistant City Manager/ Economic Development Officer
- Dennis Ng—Traffic Engineer
- Christopher L. de Groot—Director of Water and Sewer Utilities
- Gustavo Gomez—Principal Engineer Public Works
- Dave Staub—Deputy Director of Public Works/Street and Automotive Services
- Anna Shimko—Partner, Burke Williams & Sorensen, LLP
- Deborah Kartiganer—Partner, Burke Williams & Sorensen, LLP

6.2 Consultants

ICF International

- Project Director—Rich Walter
- Project Manager—Erin Efner
- Deputy Project Manager—Kirsten Chapman
- Land Use and Planning—Kirsten Chapman, Erin Efner
- Aesthetics—Kirsten Chapman
- Transportation and Traffic—Fehr & Peers
- Air Quality—Matt McFalls, Laura Yoon, Shannon Hatcher
- Greenhouse Gas Emissions—Matt McFalls, Laura Yoon, Shannon Hatcher
- Noise—Corey Matsui, Liz Scott, Dave Buehler
- Cultural Resources—Joanne Grant
- Biological Resources—Torrey Edell, Kailash Mozumder, Troy Rahmig
- Geology and Soils—BASELINE

- Hydrology and Water Quality—Alexa La Plante, BASELINE
- Hazards and Hazardous Materials—BASELINE
- Population and Housing—Kirsten Chapman
- Public Services—Jessica Viramontes
- Utilities—Jessica Viramontes
- Other CEQA Considerations—Erin Efner
- Alternatives—Jessie Shen, Ashley McBride
- Document Production/Editing—John Mathias, Ken Cherry, Anthony Ha
- Editing—Diana Roberts, Stephanie Monzon
- Graphics—Tim Messick
- GIS—Bill Parker, Sacha Selim

Fehr & Peers

Responsible for Section 3.3, *Transportation and Traffic*:

- Jane Bierstedt—Principal (Principal-in-Charge)
- Dan Rubins—Associate (Project Manager)
- Julie Morgan—Principal
- Jinghua Xu—Associate
- Ashley Brooks—Transportation Engineer
- Sarah Thomas—Transportation Engineer
- Lindsey Hilde—Transportation Planner
- Trevor Self—Technician

BASELINE

Responsible for Section 3.9, *Geology and Soils*; Section 3.10, *Hydrology and Water Quality* (groundwater); and Section 3.11, *Hazardous Materials*:

- Bruce Abelli-Amen—Principal/Certified Hydrogeologist
- Patrick Sutton—Environmental Engineer
- Todd Taylor—Environmental Associate

Bay Area Economics

Responsible for the Fiscal Impact Assessment:

- Raymond Kennedy—Director of Research
- Jessica Hitchcock—Senior Associate