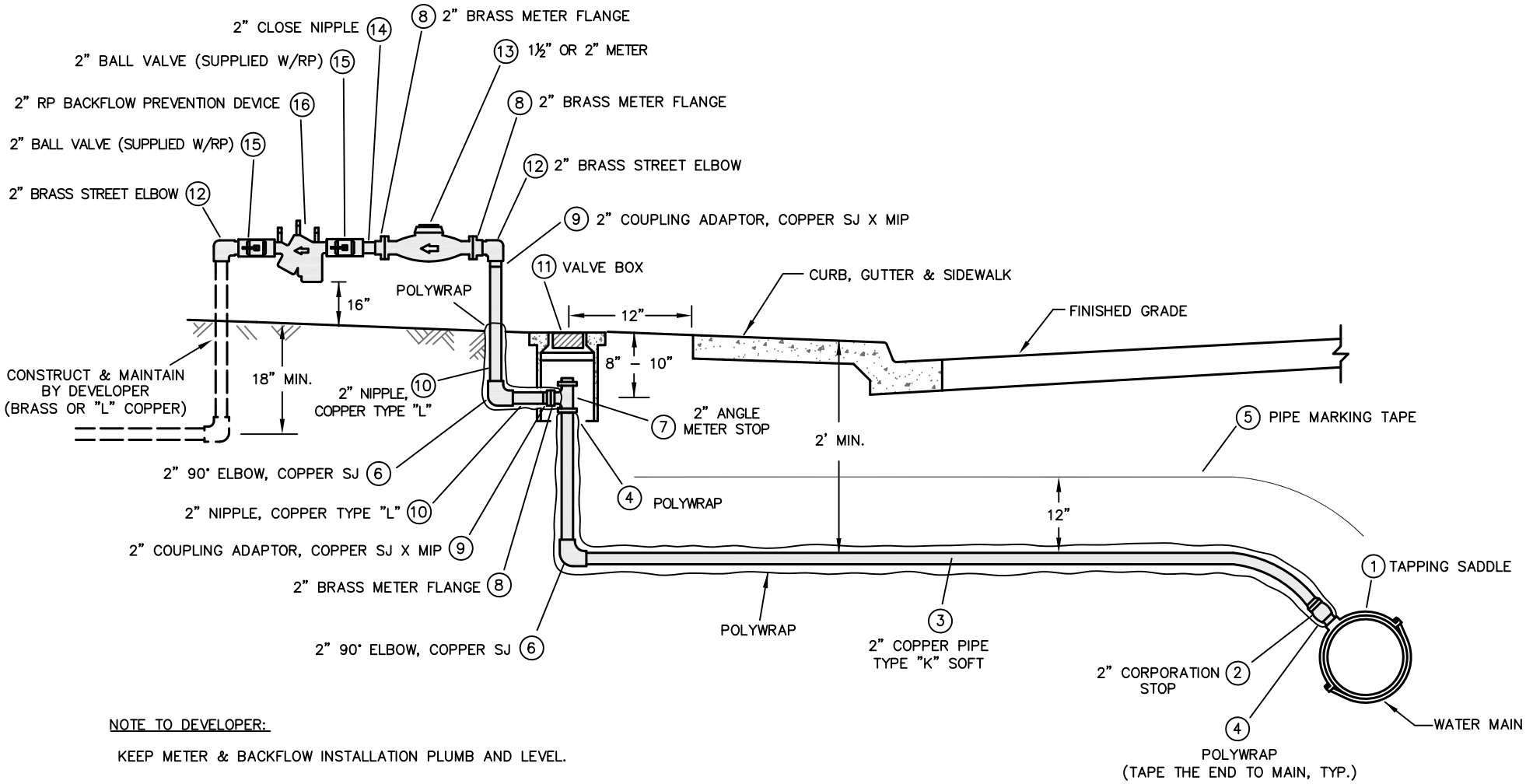

NOTE TO DEVELOPER:

KEEP METER & BACKFLOW INSTALLATION PLUMB AND LEVEL.

	Drawn By: D. LUU	**Signature:**	CITY OF SANTA CLARA WATER DEPT. - STANDARD NO. **6**
	Checked By: L. AU	Director of Water and Sewer Utilities	
	Approved By: R. WILSON, R. ENOS		**1½" & 2" WATER SERVICE W / RP**
	Revised Date: MARCH 2011		

City of Santa Clara – Water & Sewer Utilities Department

Standard No. 6 – 1 1/2” & 2” Water Service with RP – Material List

Domestic Products Only. Use no lead products for domestic water services.
Coat above ground water service with Dunn Edwards Paint #10-L, 11-789-04 Santa Clara Mission Sand, Syn Lustro

Material	Description	Manufacturer	Model
1. Tapping Saddle	For PVC C900, bronze saddle, specified pipe size x 2” AWWA/CC Tap	Ford	202BS
	For ductile iron, cast iron, AC pipe: double strap bronze, specified pipe size x 2” AWWA/CC Tap	Ford	102B
		Mueller	BR2B
2. Corporation Stop	2" AWWA/CC thread inlet x compression outlet	Mueller	B-25008N
		Ford	FB-1000-7-G-NL
For locations requiring insulated corporation stops, use Mueller N-35008 insulated corp ball valve (per direction of City Facilities Technician)			
3. Copper Tubing	2" ASTM B88, type K. Straight lengths. No rolled copper.		
4. Polywrap	Blue. 8 mil low density or 4 mil high density polyethylene film installed per AWWA C105. Tape the end to main.		
5. Pipe Marking Tape	Blue. 3” wide, 4 mil, non-detectable.		
6. 2" 90 Degree Elbow	Copper sweat joint or		
	Pack joint coupling	Ford	L-44-77
7. Angle Meter Stop	2" Compression inlet x meter flange outlet with 304 SS bolt, nuts, and washers.	Ford	BFA43-777W-G-NL
8. Meter Flange	2” brass to be slotted to accept 1-1/2” or 2” meters	Ford	CF31-77
	1-1/2” meter – use 1/8” thick, 2-hole full face gasket with 5/8” x 2-1/2” hex head, 304 SS bolts, nuts, and washers	Calpico Style 60	1-1/2”
	2” meter – 1/8” thick, 2-hole full face gasket with 3/4” x 2-1/2” hex head, 304 SS bolts, nuts, and washers	Calpico Style 60	2"
9. Copper Adapter	2" MIP x sweat joint		
10. Nipple	2" Type L rigid copper tubing; riser length to suit		
11. Valve Box with Lid	For water, lid should be marked "water meter"	Christy	G5 with lid marked "Water"
12. 90 Degree Street Elbow	Brass		
13. Water Meter & Register (manufacturer's test results are to be submitted with all meters).	Provide Elster transmitter compatible encoded register with Nicor connector. All registers to be facing inlet and provide cubic feet reading. Use 316 stainless steel bolts to fit meter.		
	1-1/2" meter and register.	Sensus	Omni R2
		Elster	M700
	2" meter and register.	Sensus	Omni R2
		Elster	M700
14. Close Nipple	Brass		
15. 2" Ball Valve	supplied with RP		
16. Reduced Pressure Back Flow Prevention Device	Includes ball valves	Conbraco	40-208-A2
		Wilkins	975XL
		Febco	825Y