METER SIZE	*SPOOL LENGTH
4"	6"
6"	6"
8"	10"

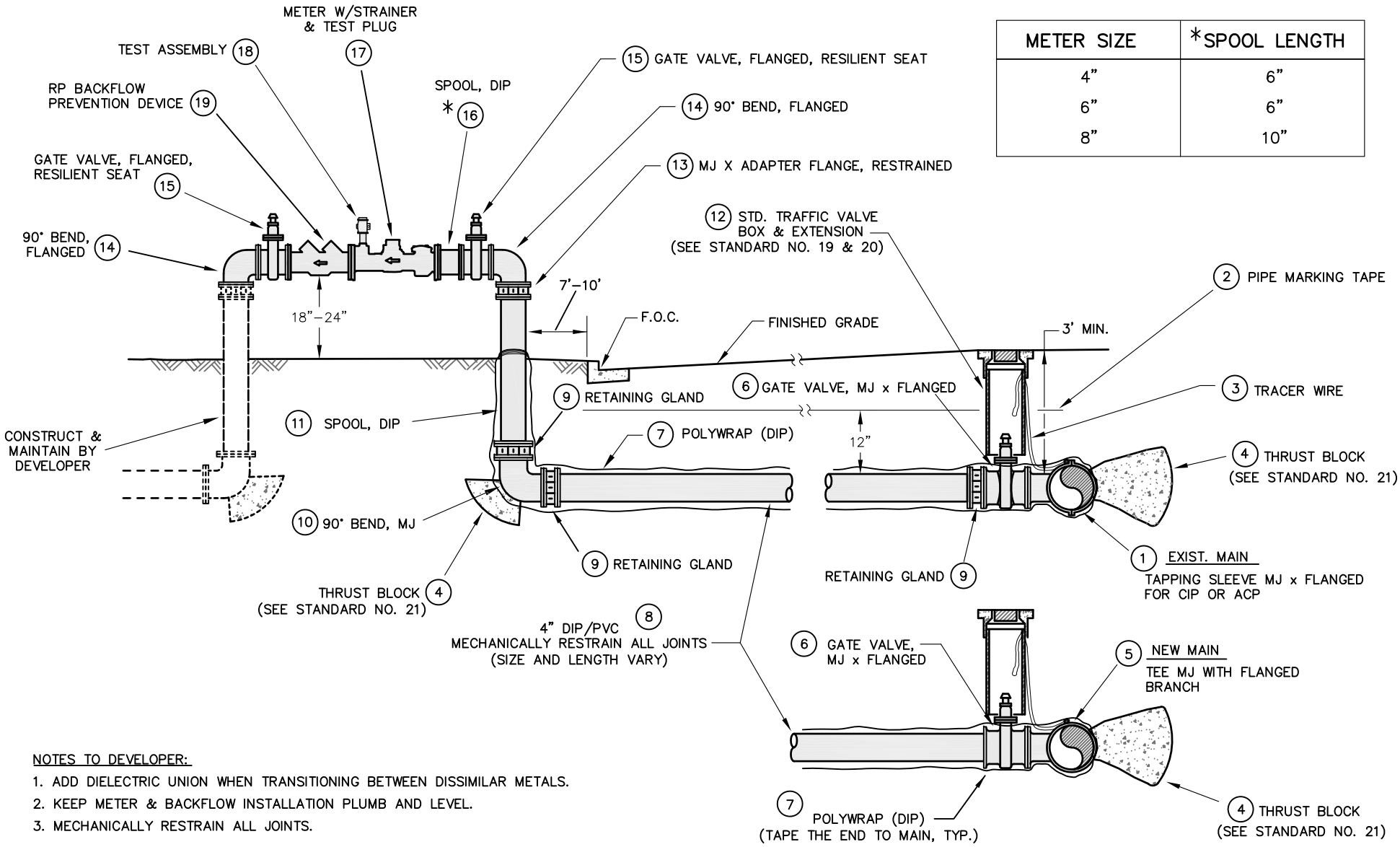

NOTES TO DEVELOPER:

1. ADD DIELECTRIC UNION WHEN TRANSITIONING BETWEEN DISSIMILAR METALS.
2. KEEP METER & BACKFLOW INSTALLATION PLUMB AND LEVEL.
3. MECHANICALLY RESTRAIN ALL JOINTS.

Drawn By: D. LUU	Signature:	CITY OF SANTA CLARA WATER DEPT. - STANDARD NO. **11**
Checked By: L. AU	Director of Water and Sewer Utilities	
Approved By: R. WILSON, R. ENOS		**4", 6" & 8" WATER SERVICE W / RP**
Revised Date: MARCH 2011		

City of Santa Clara – Water & Sewer Utilities Department

Standard No. 11 – 4”, 6", & 8" Water Service with RP – Material List

Domestic Products Only. Use 316 stainless steel bolts, nuts, and washers for all bolted connections.
Use no lead products for domestic water services.
Coat above ground water service with Dunn Edwards Paint #10-L, 11-789-04 Santa Clara Mission Sand, Syn Lustro.
Provide 3-foot clearance around service above ground.

Material	Description	Manufacturer	Model
1. Tapping Saddle	Mechanical joint with all accessories. -Ductile iron, cast iron, or PVC	Mueller H-615 Clow F-5205	
	-AC pipe	Mueller H-619 Clow F-5207	
2. Pipe Marking Tape	Blue. 3” wide, 4 mil, non-detectable.		
3. Tracer Wire	RHW#12 AWG Solid. Tape to the top of the water main with 12" minimum slack inside all valve boxes		
4. Thrust Block	See City Standard No. 21		
5. Tee	Mechanical joint with flanged branch. AWWA C-153 compact ductile iron with mechanical joint, cement lined with stainless steel bolts and gaskets	US Pipe	
		Tyler Union	
6. Gate Valve	MJ x Flanged. AWWA C-509 resilient seat, epoxy coat inside and out to meet AWWA C-550. Open left with 2” square operating nut. All rubber components shall be EPDM.	M&H	Style 4067
		Mueller	A-2361
		Clow	F-6106
7. Polywrap	To be used for DIP. Blue. 8 mil low density or 4 mil high density polyethylene film installed per AWWA C105. Tape end to pipe with 10 mil tape.		
8. Pipe mechanically restrain all joints	Size and type as specified. -Ductile iron, cement lined Class 50. Protect with polywrap for underground pipe.	US Pipe Pacific States	
	-PVC. C900. DR-14.	JM Eagle Certainteed	
9. Retaining Gland	Joint restraint for use with mechanical joint fittings. Size as specified.	US Pipe (not allowed above ground)	MJ Field Lok
		EBAA	Megalug Series 1100
		Uniflange	Series 1400 (DIP) Series 1500 (PVC)
10. 90 Degree Bend with Mechanical Joint	AWWA C-153 ductile iron with mechanical joint, cement lined with stainless steel bolts and gaskets	US Pipe	
		Tyler Union	
11. Spool	Ductile iron, cement lined Class 50		
12. Traffic Valve Box & Extension (see Standard Detail Nos. 19 & 20)	Valve Box Extension - 8” PVC SDR 35, single piece cut to proper length.	Christy	G5 with lid marked “Water”
13. MJ x Flange Adapter	AWWA C-153 ductile iron.	Tyler Union	#5-158
		Trinity / USP	With megalug restraining gland
14. 90 Degree Bend	Flanged. Size as specified. AWWA C-110 ductile iron, cement-lined.	US Pipe	
		Tyler Union	
15. Gate Valve	See 6. above		
16. Pipe mechanically restrain all joints	Ductile iron, cement lined Class 50	US Pipe Pacific States	
17. Water Meter & Register (manufacturer's test results are to be submitted with all meters).	Turbine meter with strainer and test plug. Provide Elster transmitter compatible encoded register with Nicor connector. All registers to be facing inlet and provide cubic feet reading.	Sensus	Omni T2 (industrial - more constant flow)
		Sensus	Omni C2 (varying flow)
18. Test Assembly	Consisting of a brass nipple, ball valve and brass plug. See meter manufacturer's specifications for size.	Ball valve - Ford	B11-NL
19. Reduced Pressure Backflow Prevention Device	Reduced pressure zone assembly, cast iron	Watts	LF909