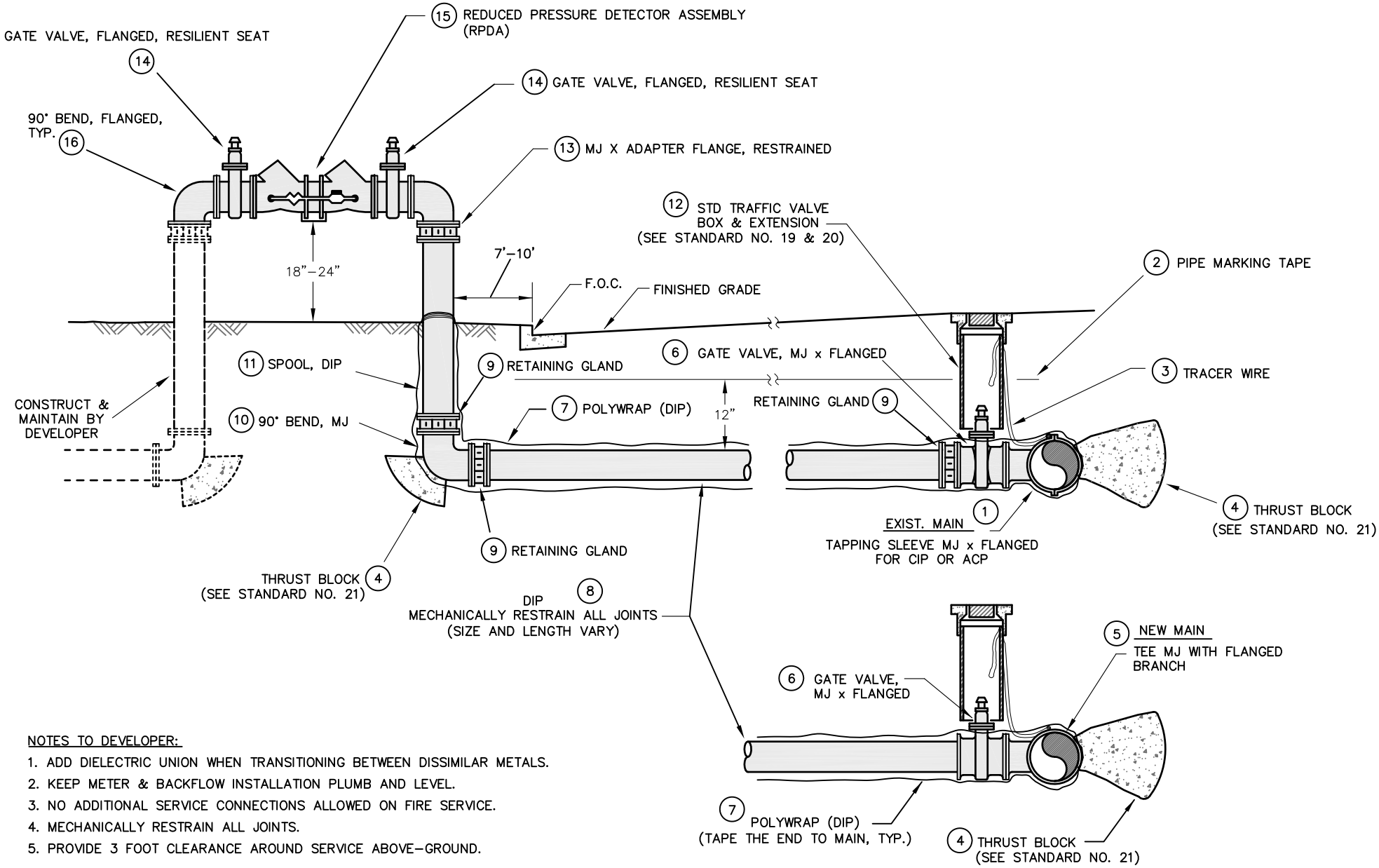

NOTES TO DEVELOPER:

1. ADD DIELECTRIC UNION WHEN TRANSITIONING BETWEEN DISSIMILAR METALS.
2. KEEP METER & BACKFLOW INSTALLATION PLUMB AND LEVEL.
3. NO ADDITIONAL SERVICE CONNECTIONS ALLOWED ON FIRE SERVICE.
4. MECHANICALLY RESTRAIN ALL JOINTS.
5. PROVIDE 3 FOOT CLEARANCE AROUND SERVICE ABOVE–GROUND.

Drawn By: D. LUU	Signature:	CITY OF SANTA CLARA WATER DEPT. - STANDARD NO. 17
Checked By: L. AU	Director of Water and Sewer Utilities	
Approved By: R. WILSON, R. ENOS		4" - 10" FIRE SERVICE ASSEMBLY W / RPDA
Revised Date: MAY 2014		

City of Santa Clara – Water & Sewer Utilities Department Revised Date: May/2014

Standard No. 17 – 4"-10" Fire Service Assembly with RPDA – Material List

Domestic Products Only. Use 316 stainless steel bolts, nuts, and washers for all bolted connections.
Coat above ground water service with Dunn Edwards Paint #10-L, 11-789-04 Santa Clara Mission Sand, Syn Lustro.
Provide 3-foot clearance around service.

Material	Description	Manufacturer	Model
1. Tapping Saddle	Mechanical joint with all accessories. -Ductile iron, cast iron, or PVC	Mueller H-615 Clow F-5205	
	-AC pipe	Mueller H-619 Clow F-5207	
2. Pipe Marking Tape	Blue. 3" wide, 4 mil, non-detectable.		
3. Tracer Wire	RHW#12 AWG Solid. Taped to the top of the water main with 12" minimum slack inside all valve boxes		
4. Thrust Block	See City Standard No. 21		
5. Tee	Mechanical joint with flanged branch. AWWA C-153 compact ductile iron with mechanical joint, cement lined with stainless steel bolts and gaskets	US Pipe	
		Tyler Union	
6. Gate Valve	MJ x Flanged. AWWA C-509 resilient seat, epoxy coat inside and out to meet AWWA C-550. Open left with 2" square operating nut. All rubber components shall be EPDM.	M&H	Style 4067
		Mueller	A-2361
		Clow	F-6106
7. Polywrap	To be used for DIP. Blue. 8 mil low density or 4 mil high density polyethylene film installed per AWWA C105. Tape ends to pipe with 10 mil tape.		
8. Pipe	Size and type as specified. -Ductile iron, cement lined Class 50. Protect with polywrap for underground pipe.	US Pipe Pacific States	
9. Retaining Gland	Joint restraint for use with mechanical joint fittings. Size as specified.	US Pipe (not allowed above ground)	MJ Field Lok
		EBAA	Megalug Series 1100
		Uniflange	Series 1400 (DIP)
10. 90 Degree Bend with mechanical joint	AWWA C-153 ductile iron with mechanical joint, cement lined with stainless steel bolts and gaskets	US Pipe	
		Tyler Union	
11. Spool	Ductile iron, class 50 minimum		
12. Traffic Valve Box & Extension (see Standard Detail Nos. 19 & 20)	Valve Box Extension - 8" PVC SDR 35, single piece cut to proper length.	Christy	G5 with lid marked "WATER"
13. MJ x Flange Adapter	AWWA C-153 ductile iron.	Tyler Union	#5-158
		Trinity / USP	With megalug restraining gland
14. & 15. Reduced Pressure Detector Assembly	Includes gate valves and bypass (leak detection) Badger meter with Elster transmitter compatible encoded register with Nicor connector. Meter register to be facing inlet and provide cubic feet reading. Each RP to have separate serial number.	Watts	909 RPDA with Rising Stems
		Wilkins	475DA
16. 90 Degree Bend	Flanged. Size as specified. AWWA C-110 ductile iron, cement-lined.	US Pipe	
		Tyler Union	