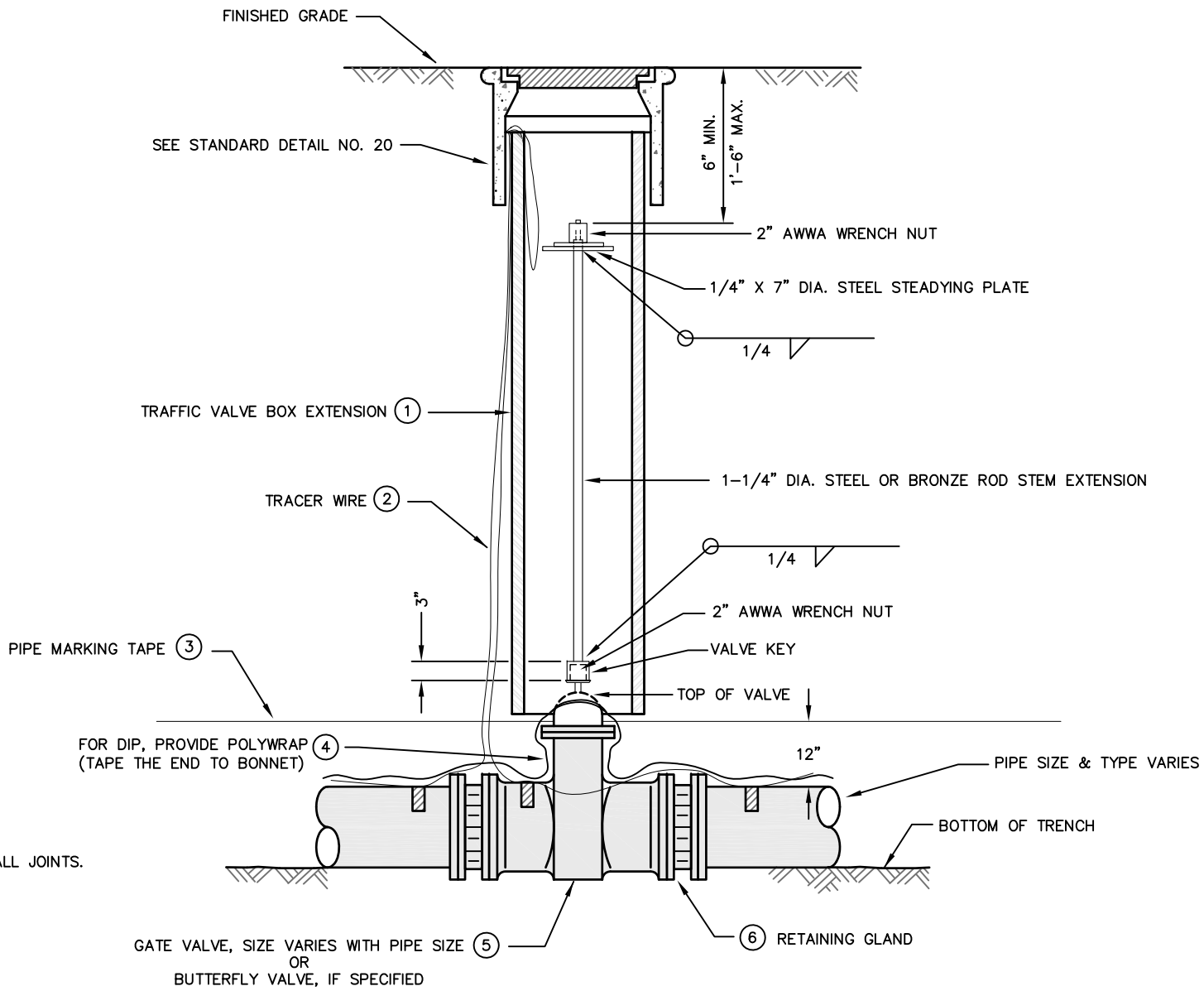

NOTE TO DEVELOPER:

1. MECHANICALLY RESTRAIN ALL JOINTS.

Drawn By: D. LUU	Signature:	CITY OF SANTA CLARA WATER DEPT. - STANDARD NO. **19**
Checked By: L. AU	Director of Water and Sewer Utilities	**GATE VALVE INSTALLATION**
Approved By: R. WILSON, R. ENOS		
Revised Date: MARCH 2011		

City of Santa Clara – Water & Sewer Utilities Department

Standard No. 19 – Gate Valve Installation – Material List

Use no lead products for domestic water services.

Domestic Products Only. Use 316 stainless steel bolts, nuts, and washers for all bolted connections.

Material	Description	Manufacturer	Model
1. Traffic Valve Box & Extension (see Standard Detail No. 20 for valve box installation)	Traffic valve box with lid. For potable water, lid shall be marked "WATER". For recycled water, provide purple lid marked "CSC-RW".	Christy	G5
	Extension - 8” PVC SDR 35, single piece cut to proper length.		
2. Trace Wire	RHW #12 AWG solid with 12" minimum slack inside all valve boxes.		
3. Pipe Marking Tape	For potable water, use blue. For recycled water, use purple. 3” wide, 4 mil, non-detectable.		
4. Polywrap (for DIP)	For potable water, use blue. For recycled water, use purple. 8 mil low density or 4 mil high density polyethylene film installed per AWWA C105. Tape the end to bonnet.		
5. Gate Valve	End connections as required or specified - size as specified. AWWA C-509 resilient seat, epoxy coated inside and out to meet AWWA C-550. Open left with 2” square operating nut. All rubber components shall be EPDM.	M&H	Style 4067
		Mueller	A-2361
		Clow	F-6106
Butterfly Valve	End connections as required or specified - size as specified. AWWA C-504 resilient seat, epoxy coated inside and out to meet AWWA C-550. Open left with 2” square operating nut. All rubber components shall be EPDM.	Pratt	Groundhog series
		Mueller	Lineseal III
6. Retaining Gland	Joint restraint for use with mechanical joint fittings. Size as specified.	US Pipe	MJ Field Lok
		EBAA	Megalug Series 1100
		Uniflange	Series 1400 (DIP) Series 1500 (PVC)