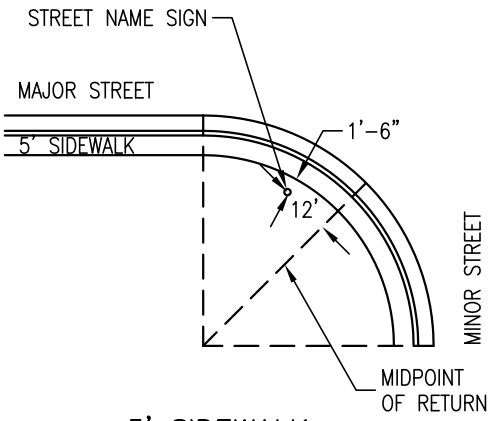

5' SIDEWALK

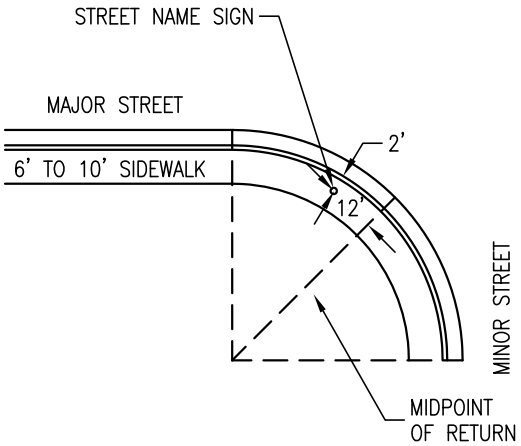

6' TO 10' SIDEWALK

STREET NAME SIGN LOCATION DETAILS

NO SCALE

NOTES:

1. TWO STREET NAME SIGNS LOCATED DIAGONALLY ACROSS FROM EACH OTHER ARE REQUIRED WHERE ONE OF THE TWO INTERSECTING STREETS' WIDTH (CURB TO CURB) IS 64' OR MORE.
2. ONLY ONE STREET NAME SIGN IS REQUIRED IF BOTH INTERSECTING STREETS' WIDTHS (CURB TO CURB) ARE LESS THAN 64'.
3. PRIVATE STREET NAME SIGN SHALL BE WHITE LETTERING ON BROWN BACKGROUND AND SHALL BE PLACED OUTSIDE PUBLIC ROW.

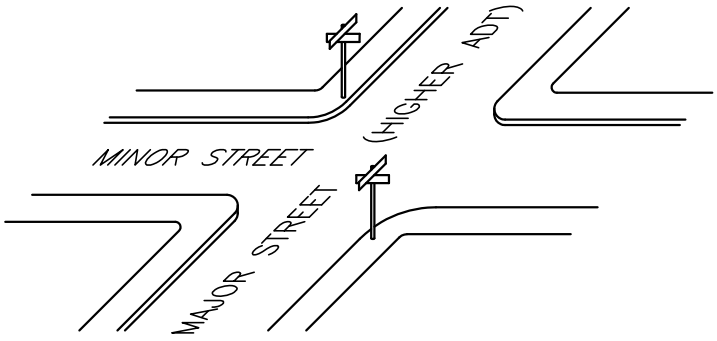

TYPICAL STREET NAME SIGN LOCATIONS

NO SCALE

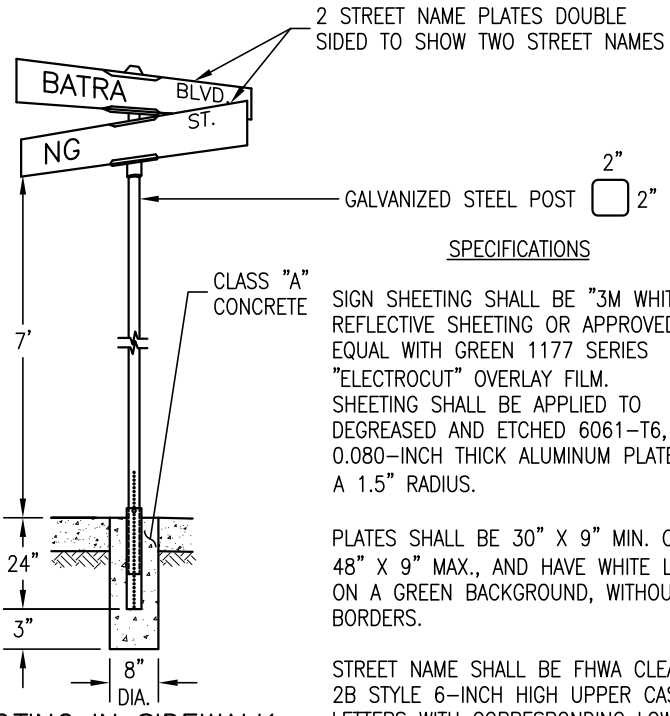

FOOTING IN SIDEWALK

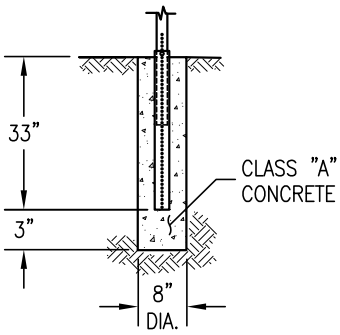

FOOTING IN DIRT

SPECIFICATIONS

SIGN SHEETING SHALL BE "3M WHITE HIP" REFLECTIVE SHEETING OR APPROVED EQUAL WITH GREEN 1177 SERIES "ELECTROCUT" OVERLAY FILM. SHEETING SHALL BE APPLIED TO DEGREASED AND ETCHED 6061-T6, 0.080-INCH THICK ALUMINUM PLATE WITH A 1.5" RADIUS.

PLATES SHALL BE 30" X 9" MIN. OR 48" X 9" MAX., AND HAVE WHITE LETTERS ON A GREEN BACKGROUND, WITHOUT BORDERS.

STREET NAME SHALL BE FHWA CLEARVIEW 2B STYLE 6-INCH HIGH UPPER CASE LETTERS WITH CORRESPONDING LOWER CASE LETTERS. 2.5-INCH LETTERS SHALL BE USED FOR "AVE., BLVD., CT., DR., PL., RD., ST., LN." "WAY" SHALL NOT BE ABBREVIATED.

ASSEMBLY HARDWARE SHALL BE "WESTERN HIGHWAY PRODUCTS" (WHP) NO. (812F/ 12" FOR FLAT BLADES) OR NO. (812F-90% CROSSPIECE FOR FLAT BLADES) OR APPROVED EQUAL.

2" X 2" GALVANIZED STEEL POST SHALL BE INSTALLED WITH WHP "ANCHOR-MATE" SIGN POST SUPPORT ANCHOR OR APPROVED EQUAL.

STREET NAME SIGN

NO SCALE

THE CITY OF SANTA CLARA CALIFORNIA The Mission City INCORPORATED 1852	DRAWN BY: K. TRAN	STREET NAME SIGN AND LOCATION	TR-1
	CHECKED BY: P. BHATIA		
	APPROVED BY: D. NG		
	DATE: OCTOBER 2015	CITY OF SANTA CLARA	PAGE: 49