Federal Register

Thursday,
January 18, 2001

Part V

Environmental Protection Agency

40 CFR Parts 69, 80, and 86

Control of Air Pollution From New Motor Vehicles: Heavy-Duty Engine and Vehicle Standards and Highway Diesel Fuel Sulfur Control Requirements; Final Rule

EXHIBIT J

ENVIRONMENTAL PROTECTION AGENCY

40 CFR Parts 69, 80, and 86

[AMS–FRL–6923–7]

RIN 2060–AI69

Control of Air Pollution from New Motor Vehicles: Heavy-Duty Engine and Vehicle Standards and Highway Diesel Fuel Sulfur Control Requirements

AGENCY: Environmental Protection Agency.

ACTION: Final rule.

SUMMARY: The pollution emitted by diesel engines contributes greatly to our nation's continuing air quality problems. Even with more stringent heavy-duty highway engine standards set to take effect in 2004, these engines will continue to emit large amounts of nitrogen oxides and particulate matter, both of which contribute to serious public health problems in the United States. These problems include premature mortality, aggravation of respiratory and cardiovascular disease, aggravation of existing asthma, acute respiratory symptoms, chronic bronchitis, and decreased lung function. Numerous studies also link diesel exhaust to increased incidence of lung cancer. We believe that diesel exhaust is likely to be carcinogenic to humans by inhalation and that this cancer hazard exists for occupational and environmental levels of exposure.

We are establishing a comprehensive national control program that will regulate the heavy-duty vehicle and its fuel as a single system. As part of this program, new emission standards will begin to take effect in model year 2007, and will apply to heavy-duty highway engines and vehicles. These standards are based on the use of high-efficiency catalytic exhaust emission control devices or comparably effective advanced technologies. Because these devices are damaged by sulfur, we are also reducing the level of sulfur in highway diesel fuel significantly by mid-2006. The program provides substantial flexibility for refiners, especially small refiners, and for manufacturers of engines and vehicles. These options will ensure that there is widespread availability and supply of the low sulfur diesel fuel from the very beginning of the program, and will provide engine manufacturers with the lead time needed to efficiently phase-in the exhaust emission control technology that will be used to achieve the emissions benefits of the new standards.

We estimate that heavy-duty trucks and buses today account for about one-third of nitrogen oxides emissions and one-quarter of particulate matter emissions from mobile sources. In some urban areas, the contribution is even greater. This program will reduce particulate matter and oxides of nitrogen emissions from heavy duty engines by 90 percent and 95 percent below current standard levels, respectively. In order to meet these more stringent standards for diesel engines, the program calls for a 97 percent reduction in the sulfur content of diesel fuel. As a result, diesel vehicles will achieve gasoline-like exhaust emission levels. We are also finalizing more stringent standards for heavy-duty gasoline vehicles, based in part on the use of the low sulfur gasoline that will be available when the standards go into effect.

The clean air impact of this program will be dramatic when fully implemented. By 2030, this program will reduce annual emissions of nitrogen oxides, nonmethane hydrocarbons, and particulate matter by a projected 2.6 million, 115,000 and 109,000 tons, respectively. We project that these reductions and the resulting significant environmental benefits of this program will come at an average cost increase of about $2,000 to $3,200 per new vehicle in the near term and about $1,200 to $1,900 per new vehicle in the long term, depending on the vehicle size. In comparison, new vehicle prices today can range well over $100,000 for larger heavy-duty vehicles. We estimate that when fully implemented the sulfur reduction requirement will increase the cost of producing and distributing diesel fuel by about five cents per gallon.

DATES: This rule will become effective March 19, 2001. The incorporation by reference of certain publications listed in this rule is approved by the Director of the Office of Federal Register as of March 19, 2001.

ADDRESSES: *Comments:* All comments and materials relevant to today's action have been placed in Public Docket No. A–99–06 at the following address: U.S. Environmental Protection Agency (EPA), Air Docket (6102), Room M–1500, 401 M Street, SW, Washington, DC 20460 (on the ground floor in Waterside Mall) from 8:00 a.m. to 5:30 p.m., Monday through Friday, except on government holidays. You can reach the Air Docket by telephone at (202) 260–7548 and by facsimile at (202) 260–4400. We may charge a reasonable fee for copying docket materials, as provided in 40 CFR part 2.

FOR FURTHER INFORMATION CONTACT: Margaret Borushko, U.S. EPA, National Vehicle and Fuel Emissions Laboratory, 2000 Traverwood, Ann Arbor MI 48105; Telephone (734) 214–4334, FAX (734) 214–4816, E-mail borushko.margaret@epa.gov

SUPPLEMENTARY INFORMATION:

Regulated Entities

This action will affect you if you produce or import new heavy-duty engines which are intended for use in highway vehicles such as trucks and buses, or produce or import such highway vehicles, or convert heavy-duty vehicles or heavy-duty engines used in highway vehicles to use alternative fuels, or produce or import light-duty highway diesel vehicles. It will also affect you if you produce, import, distribute, or sell highway diesel fuel, or sell nonroad diesel fuel.

The following table gives some examples of entities that may have to follow the regulations. But because these are only examples, you should carefully examine the regulations in 40 CFR parts 69, 80, and 86. If you have questions, call the person listed in the **FOR FURTHER INFORMATION CONTACT** section of this preamble:

Category	NAICS Codes [a]	SIC Codes [b]	Examples of potentially regulated entities
Industry	336112 336120	3711	Engine and Truck Manufacturers
Industry	811112 811198	7533 7549	Commercial Importers of Vehicles and Vehicle Components
Industry	324110	2911	Petroleum Refiners
Industry	422710 422720	5171 5172	Diesel Fuel Marketers and Distributors
industry	484220	4212	Diesel Fuel Carriers

EXHIBIT J

Category	NAICS Codes [a]	SIC Codes [b]	Examples of potentially regulated entities
	484230	4213	

[a] North American Industry Classifications System (NAICS).
[b] Standard Industrial Classification (SIC) system code.

Access to Rulemaking Documents Through the Internet

Today's final rule is available electronically on the day of publication from the Environmental Protection Agency Internet Web site listed below. Electronic copies of the preamble, regulatory language, Regulatory Impact Analysis, and other documents associated with today's final rule are available from the EPA Office of Transportation and Air Quality (formerly the Office of Mobile Sources) Web site listed below shortly after the rule is signed by the Administrator. This service is free of charge, except any cost that you incur for connecting to the Internet.

Environmental Protection Agency Web Site: *http://www.epa.gov/fedrgstr/* (Either select a desired date or use the Search feature.)

Office of Transportation and Air Quality (OTAQ) Web Site: *http://www.epa.gov/otaq/* (Look in ''What's New'' or under the ''Heavy Trucks/Busses'' topic.)

Please note that due to differences between the software used to develop the document and the software into which document may be downloaded, changes in format, page length, etc. may occur.

Table of Contents

I. Overview
A. What Requirements Are Being Set?
1. Heavy-Duty Emission Standards
2. Fuel Quality Standards
B. Why is EPA Taking This Action?
1. Heavy-Duty Vehicles Contribute to Serious Air Pollution Problems
2. Technology-Based Solutions
3. Basis for Action Under the Clean Air Act
C. Putting This Rule in Perspective
1. Diesel Popularity
2. Past Progress and New Developments
3. Tier 2 Emissions Standards
4. Mobile Source Air Toxics Rulemaking
5. Nonroad Engine Standards and Fuel
6. State Initiatives
7. Retrofit Programs
8. Actions in Other Countries
II. The Air Quality Need and Projected Benefits
A. Overview
B. Public Health and Welfare Concerns
1. Health and Welfare Concerns Raised During Public Hearings
2. Ozone and its Precursors
a. Health and Welfare Effects From Short-Term Exposures to Ozone
b. Current and Future Nonattainment Status With the 1-Hour Ozone NAAQS
c. Public Health and Welfare Concerns from Prolonged and Repeated Exposures to Ozone
3. Particulate Matter
a. Health and Welfare Effects
b. Attainment and Maintenance of the PM_{10} NAAQS
c. Public Health and Welfare Concerns from Exposure to Fine PM
d. Other Welfare Effects Associated with PM
e. Conclusions Regarding PM
4. Diesel Exhaust
a. Potential Cancer Effects of Diesel Exhaust
b. Noncancer Effects of Diesel Exhaust
5. Other Criteria Pollutants
6. Other Air Toxics
a. Benzene
b. 1,3-Butadiene
c. Formaldehyde
d. Acetaldehyde
e. Acrolein
f. Dioxins
7. Other Welfare and Environmental Effects
a. Acid Deposition
b. Eutrophication and Nitrification
c. Polycyclic Organic Matter Deposition
d. Visibility and Regional Haze
C. Contribution From Heavy-Duty Vehicles
1. NO_X Emissions
2. PM Emissions
3. Environmental Justice
D. Anticipated Emissions Benefits
1. NO_X Reductions
2. PM Reductions
3. NMHC Reductions
4. Additional Emissions Benefits
a. CO Reductions
b. SO_X Reductions
c. Air Toxics Reductions
E. Clean Heavy-Duty Vehicles and Low-Sulfur Diesel Fuel are Critically Important for Improving Human Health and Welfare
III. Heavy-Duty Engine and Vehicle Standards
A. Why Are We Setting New Heavy-Duty Standards?
B. Emission Control Technologies for Heavy-Duty Vehicles and Engines
C. What Engine and Vehicle Standards are We Finalizing?
1. Heavy-Duty Engine Exhaust Emissions Standards
a. FTP Standards
b. Supplemental Provisions for HD Diesel Engines (SET & NTE)
c. Crankcase Emissions Control
d. On-Board Diagnostics (OBD)
2. Heavy-Duty Vehicle Exhaust Emissions Standards
a. FTP Standards
b. Supplemental Federal Test Procedure
c. On-Board Diagnostics (OBD)
3. Heavy-Duty Evaporative Emission Standards
D. Incentives for Early Introduction of Clean Engines and Vehicles
E. Feasibility of the New Engine and Vehicle Standards
1. Feasibility of Stringent Standards for Heavy-Duty Diesel
a. Meeting the PM Standard
b. Meeting the NO_X Standard
c. Meeting the NMHC Standard
d. Meeting the Crankcase Emissions Requirements
e. The Complete System
2. Feasibility of Stringent Standards for Heavy-Duty Gasoline
3. Feasibility of the New Evaporative Emission Standards
F. Need for Low Sulfur Diesel Fuel
1. Catalyzed Diesel Particulate Filters and the Need for Low Sulfur Fuel
a. Inhibition of Trap Regeneration Due to Sulfur
b. Loss of PM Control Effectiveness
c. Increased Maintenance Cost for Diesel Particulate Filters Due to Sulfur
2. Diesel NO_X Catalysts and the Need for Low Sulfur Fuel
a. Sulfur Poisoning (Sulfate Storage) on NO_X Adsorbers
b. Sulfate Particulate Production and Sulfur Impacts on Effectiveness of NO_X Control Technologies
3. What About Sulfur in Engine Lubricating Oils?
G. Fuel Economy Impact of High Efficiency Control Technologies
1. Diesel Particulate Filters and Fuel Economy
2. NO_X Control Technologies and Fuel Economy
3. Emission Control Systems for 2007 and Net Fuel Economy Impacts
H. Review of the Status of Heavy-Duty Diesel NO_X Emission Control Technology
IV. Our Program for Controlling Highway Diesel Sulfur
A. Highway Diesel Sulfur Standards for Refiners and Importers
1. Standards and Deadlines that Refiners and Importers Must Meet
2. Temporary Compliance Option for Refiners and Importers
a. Generating Credits
b. Using Credits
c. How Long Will Credits Last?
d. Additional Limitations on Credit Trading for Some States
3. What Information Must Refiners/Importers Submit to Us?
4. Impacts of the Highway Diesel Fuel Program
a. Ensures Adequate Supplies of Highway Diesel Fuel
b. Ensures Widespread Availability of Low Sulfur Diesel Fuel
c. Provides Lower Costs to Refineries
d. Misfueling Concerns Should Be Minimized

EXHIBIT J

e. Summary
B. What Provisions Apply in the Geographic Phase-in Area?
1. What Is the Geographic Phase-in Area and How Was it Established?
2. Highway Diesel Provisions for GPA Refiners
3. How Do Refiners Apply for an Extension of the GPA Gasoline Program?
4. Required Reporting for GPA Refiners
C. Hardship Provisions for Qualifying Refiners
1. Hardship Provisions for Qualifying Small Refiners
a. Qualifying Small Refiners
b. How Do We Define Small Refiners?
c. What Options Are Available for Small Refiners?
d. How Do Small Refiners Apply for Small Refiner Status?
2. Farmer Cooperative Refiners Will Benefit From the Flexible Provisions Available to Other Refiners
3. General Hardship Provisions
a. Temporary Waivers from Low Sulfur Diesel Requirements in Extreme Unforseen Circumstances
b. Temporary Waivers Based on Extreme Hardship Circumstances
D. Technological Feasibility of the Low Sulfur Diesel Fuel Program
1. What Technology Will Refiners Use?
2. Have These Technologies Been Commercially Demonstrated?
3. Feasibility of Distributing Low Sulfur Highway Diesel Fuel
E. What Are the Potential Impacts of the Low Sulfur Diesel Program on Lubricity and Other Fuel Properties?
1. What Is Lubricity and Why Might It Be a Concern?
2. Today's Action on Lubricity: a Voluntary Approach
3. What Are Today's Actions on Fuel Properties Other than Sulfur?
F. How Are State Programs Affected by the Low Sulfur Diesel Program?
1. State Preemption
2. What Provisions Apply in Alaska?
a. Today's Action Regarding the 500 ppm Standard in Alaska
b. Why Are We Treating Alaska Uniquely?
3. What Provisions Apply in American Samoa, Guam, and the Commonwealth of Northern Mariana Islands?
a. Today's Action Regarding the Highway Diesel Fuel Standard in the Territories
b. Why Are We Treating These Territories Uniquely?
G. Refinery Air Permitting
V. Economic Impact
A. Cost for Diesel Vehicles to Meet Emissions Standards
1. Summary of New System and Operating Costs
2. New System Costs for NO_X and PM Emission Control
3. Operating Costs Associated With NO_X and PM Control
B. Cost for Gasoline Vehicles to Meet the New Emissions Standards
1. Summary of New System Costs
2. Operating Costs Associated With Meeting the Heavy-Duty Gasoline Standard
C. Cost of Fuel Change
1. Refinery Costs
2. Highway Diesel Fuel Supply
3. Cost of Lubricity Additives
4. Distribution Costs
a. Distribution Costs Under the Fully Implemented Program
b. Distribution Costs During the Initial Years
5. Benefits of Low-sulfur Diesel Fuel for the Existing Diesel Fleet
D. Aggregate Costs
E. Cost Effectiveness
1. What Is the Cost Effectiveness of This Program?
2. Comparison With Other Means of Reducing Emissions
F. Does the Value of the Benefits Outweigh the Cost of the Standards?
1. What Was Our Overall Approach to the Benefit-Cost Analysis?
2. What Are the Significant Limitations of the Benefit-Cost Analysis?
3. How Has the Benefit-Cost Analysis Changed from Proposal?
4. What Are the Benefits in the Years Leading up to 2030?
5. What Were the Results of the Benefit-Cost Analysis?
VI. Requirements for Engine and Vehicle Manufacturers
A. Compliance with Standards and Enforcement
1. Allowable Maintenance
2. Emission Data Waivers
3. Crankcase Emissions
4. Non-Conformance Penalties
5. Idle CO Standards
B. Compliance With Phase-in Schedules
C. Averaging, Banking, and Trading
D. FTP Changes to Accommodate Regeneration of Exhaust Emission Controls
E. Improvements to the Test Procedures
F. Certification Fuel
G. Misfueling Concerns for Light-and Heavy-duty Diesel Vehicles
H. In-Use Compliance Levels During the Transition Years to New Technologies
VII. Highway Diesel Fuel Program: Compliance, Enforcement and Downstream Provisions
A. General Provisions
1. Definition of Diesel Fuel Covered by This Program
2. Relationship to Highway Diesel Standards
B. What Are the Requirements for Refiners and Importers?
1. General Requirements
2. Refiner and Importer Temporary Compliance Option Provisions and the Credit Trading Program
a. Early Credits Program
b. Credit Use in a Credit Deficit Situation
c. Resolving Issues of Invalid Credits
d. Compliance Provisions
e. Additional Provisions for Importers of Diesel Fuel and for Foreign Refiners Subject to the Temporary Compliance Option and Hardship Provisions
3. Refiner Hardship Provisions
a. General Refiner Hardship Provisions
b. Small Refiner Hardship Provisions
c. Relief for Refiners Supplying Gasoline to the Tier 2 Geographic Phase-In Area (GPA)
C. What Requirements Apply Downstream of the Refinery or Import Facility?
1. Downstream Enforcement of the Standards
2. Other Provisions
a. Implementation Dates
b. Product Segregation and Contamination
c. Diesel Fuel Pump Labeling
3. Use of Used Motor Oil in New Diesel Vehicles
4. Use of Kerosene in Diesel Fuel
5. Use of Diesel Fuel Additives
D. What Are the Testing and Sampling Methods and Requirements?
1. Diesel Fuel Testing Requirements and Test Methods
2. Diesel Fuel Sampling Methods
E. What Are the Recordkeeping, Reporting and Product Transfer Document Requirements?
1. Registration of Refiners and Importers
a. All Refiners and Importers
b. Prospective Small Refiners
c. Refiners Seeking an Extension of the GPA Gasoline Sulfur Standards
2. Pre-Compliance Reports
a. All Refiners
b. Small Refiners
c. GPA Refiners
3. Annual Compliance Reports
a. All Refiners
b. Small Refiners
4. Initial Confirmation of 15 ppm Fuel Production
5. Product Transfer Documents (PTDs)
a. Diesel Fuel
b. Additives
6. Recordkeeping Requirements
7. Record Retention
F. Are There Any Exemptions From the Highway Diesel Fuel Requirements?
1. Research and Development
2. Racing Vehicles
3. Military Fuel
G. Liability and Penalty Provisions for Noncompliance
1. General
2. What Is the Liability That Additive Manufacturers and Distributors, and Parties That Blend Additives into Diesel Fuel, Are Subject To?
a. General
b. Liability When the Additive Is Designated as Complying with the 15 ppm Sulfur Standard
c. Liability When the Additive Is Designated as Having a Possible Sulfur Content Greater than 15 ppm
H. How Will Compliance With the Sulfur Standards Be Determined?
VIII. Standards and Fuel for Nonroad Diesel Engines
IX. Public Participation
X. Administrative Requirements
A. Administrative Designation and Regulatory Analysis
B. Regulatory Flexibility Analysis
1. Need for and Objectives of the Rule
2. Summary of Significant Public Comments on the IRFA
3. Types and Number of Small Entities
4. Reporting, Recordkeeping and Other Compliance Requirements
5. Regulatory Alternatives To Minimize Impact on Small Entities
C. Paperwork Reduction Act

EXHIBIT J

D. Intergovernmental Relations
1. Unfunded Mandates Reform Act
2. Executive Order 13084: Consultation and Coordination with Indian Tribal Governments
E. National Technology Transfer and Advancement Act
F. Executive Order 13045: Children's Health Protection
G. Executive Order 13132: Federalism
H. Congressional Review Act
XI. Statutory Provisions and Legal Authority

I. Overview

This rule covers the second of two phases in a comprehensive nationwide program for controlling emissions from heavy-duty engines (HDEs) and vehicles. It builds upon the phase 1 program we recently finalized (65 FR 59896, October 6, 2000). That action affirmed the 50 percent reduction in emissions of oxides of nitrogen (NO_X) from 2004 model year highway diesel engines, set in 1997 (62 FR 54693, October 21, 1997), and set new emission standards for heavy-duty gasoline-fueled engines and vehicles for 2005.

This second phase of the program looks beyond 2004, based on the use of high-efficiency exhaust emission control devices and the consideration of the vehicle and its fuel as a single system. In developing this rule, we took into consideration comments received in response to the advance notice of proposed rulemaking (64 FR 26142, May 13, 1999) and the notice of proposed rulemaking (NPRM) (65 FR 35430, June 2, 2000), including comments provided at five public hearings last June.

This program will result in particulate matter (PM) and NO_X emission levels that are 90 percent and 95 percent below the standard levels in effect today, respectively. In order to meet these more stringent standards for diesel engines, the rule mandates a 97 percent reduction in the sulfur content of diesel fuel. The heavy-duty engine standards will be effective starting in the 2007 model year and the low sulfur diesel fuel needed to facilitate the standards will be widely available in September 2006. As a result, diesel vehicles will achieve gasoline-like exhaust emission levels, in addition to their inherent advantages over gasoline vehicles with respect to fuel economy, lower greenhouse gas emissions, and lower evaporative hydrocarbon emissions. The rule also includes more stringent standards for heavy-duty gasoline vehicles. In addition to its impact on heavy-duty vehicle emissions, this rule will make clean diesel fuel available in time for implementation of the light-duty Tier 2 standards.

The standards will result in substantial benefits to public health and welfare and the environment through significant reductions in emissions of NO_X, PM, nonmethane hydrocarbons (NMHC), carbon monoxide (CO), sulfur oxides (SO_X), and air toxics. We project that by 2030, this phase 2 program will reduce annual emissions of NO_X, NMHC, and PM by 2.6 million, 115,000 and 109,000 tons, respectively. These emission reductions will prevent 8,300 premature deaths, over 9,500 hospitalizations, and 1.5 million work days lost. All told the benefits of this rule equal $70.3 billion. A sizeable part of the benefits in the early years of this program come from large reductions in the amount of direct and secondary PM caused by the existing fleet of heavy-duty vehicles. These reductions are due to the use of the higher quality diesel fuel in these vehicles.

A. What Requirements Are Being Set?

There are two basic parts to this program: (1) New exhaust emission standards for heavy-duty highway engines and vehicles, and (2) new quality standards for highway diesel fuel. The systems approach of combining the engine and fuel standards into a single program is critical to the success of our overall efforts to reduce emissions, because the emission standards will not be feasible without the fuel change. The feasibility of the emission standards is based on the use of high-efficiency exhaust emission control devices that would be damaged by sulfur in the fuel. This rule, by providing extremely low sulfur diesel fuel, will also enable cleaner diesel passenger vehicles and light-duty trucks. This is because the same pool of highway diesel fuel also services these light-duty diesel vehicles, and these vehicles can employ technologies similar to the high-efficiency heavy-duty exhaust emission control technologies that will be enabled by the fuel change. We believe these technologies are needed for diesel vehicles to comply with our Tier 2 emissions standards for light-duty highway vehicles (65 FR 6698, February 10, 2000).

We believe that this systems approach is a comprehensive way to enable effective new technologies for clean diesel, affecting all sizes of highway diesel engines, and may translate to future reductions from diesel engines used in nonroad applications too. The fuel change, in addition to enabling new technologies, will also produce emissions and maintenance benefits in the existing fleet of highway diesel vehicles. These benefits will include reduced sulfate PM and sulfur oxides emissions, reduced engine wear and less frequent oil changes, and longer-lasting exhaust gas recirculation (EGR) components on engines equipped with EGR. Heavy-duty gasoline vehicles will also be expected to have much lower emissions due to the transfer of recent technology developments for light-duty applications, and the recent action taken to reduce sulfur in gasoline as part of the Tier 2 rule.

The basic elements of the rule are outlined below. Detailed provisions and justifications for our rule are discussed in subsequent sections.

1. Heavy-Duty Emission Standards

We are finalizing a PM emissions standard for new heavy-duty engines of 0.01 grams per brake-horsepower-hour (g/bhp-hr), to take full effect for diesels in the 2007 model year.[1] We are also finalizing standards for NO_X and NMHC of 0.20 g/bhp-hr and 0.14 g/bhp-hr, respectively. These NO_X and NMHC standards will be phased in together between 2007 and 2010, for diesel engines. The phase-in will be on a percent-of-sales basis: 50 percent from 2007 to 2009 and 100 percent in 2010. This phase-in schedule differs somewhat from the proposed schedule for reasons explained in Section III. Gasoline engines will be subject to these standards based on a phase-in requiring 50 percent compliance in the 2008 model year and 100 percent compliance in the 2009 model year. This phase-in schedule also differs from that proposed for reasons explained in Section III. In addition, we are finalizing our proposal to include turbocharged diesels in the existing crankcase emissions prohibition, effective in 2007.

Standards for complete HDVs will be implemented on the same schedule as for gasoline engine standards. For certification of complete vehicles between 8500 and 10,000 pounds gross vehicle weight rating (GVWR), the standards are 0.2 grams per mile (g/mi) for NO_X, 0.02 g/mi for PM, 0.195 g/mi for NMHC, and 0.032 g/mi for formaldehyde.[2] For vehicles between

[1] Note that throughout this preamble we refer to diesel and gasoline vehicles and engines. We tend to use those terms given the preponderance of vehicles using diesel fuel or gasoline fuel in the U.S. heavy-duty highway market. However, when we refer to a diesel engine, we generally mean any engine using the diesel cycle. When we refer to a gasoline engine or vehicle, we generally mean any Otto-cycle vehicle or engine. Therefore, the emission standards discussed throughout this preamble apply equally to engines and vehicles fueled by alternative fuels, unless otherwise specified in the regulatory text accompanying today's rule.

[2] Vehicle weight ratings in this rule refer to GVWR (the curb weight of the vehicle plus its maximum recommended load of passengers and cargo) unless noted otherwise.

EXHIBIT J

10,000 and 14,000 pounds, the standards are 0.4 g/mi for NO_X, 0.02 g/mi for PM, 0.230 g/mi for NMHC, and 0.040 g/mi for formaldehyde. These standards levels are roughly comparable to the engine-based standards in these size ranges. Note that these standards will not apply to vehicles above 8500 pounds that we classify as medium-duty passenger vehicles as part of our Tier 2 program.

Finally, we are adopting new evaporative emissions standards for heavy-duty engines and vehicles, effective on the same schedule as the gasoline engine and vehicle exhaust emission standards. The new standards for 8500 to 14,000 pound vehicles are 1.4 and 1.75 grams per test for the 3-day diurnal and supplemental 2-day diurnal tests, respectively. Standards levels of 1.9 and 2.3 grams per test will apply for vehicles over 14,000 pounds. These standards represent more than a 50 percent reduction in the numerical standards as they exist today.

The program includes flexibility provisions to facilitate the transition to the new standards and to encourage the early introduction of clean technologies, and adjustments to various testing and compliance requirements to address differences between the new technologies and existing engine-based technologies. These provisions are described in Sections III and VI.

2. Fuel Quality Standards

This rule specifies that, beginning June 1, 2006, refiners must begin producing highway diesel fuel that meets a maximum sulfur standard of 15 parts per million (ppm). All 2007 and later model year diesel-fueled vehicles must be refueled with this new low sulfur diesel fuel. This sulfur standard is based on our assessment of the impact of sulfur on advanced exhaust emission control technologies, and a corresponding assessment of the feasibility of low sulfur fuel production and distribution.

Today's program includes a combination of flexibilities available to refiners to ensure a smooth transition to low sulfur highway diesel fuel. First, refiners can take advantage of a temporary compliance option, including an averaging, banking and trading component, beginning in June 2006 and lasting through 2009, with credit given for early compliance before June 2006. Under this temporary compliance option, up to 20 percent of highway diesel fuel may continue to be produced at the existing 500 ppm sulfur maximum standard. Highway diesel fuel marketed as complying with the 500 ppm sulfur standard must be segregated from 15 ppm fuel in the distribution system, and may only be used in pre-2007 model year heavy-duty vehicles. Second, we are providing additional hardship provisions for small refiners to minimize their economic burden in complying with the 15 ppm sulfur standard. Third, we are providing additional flexibility to refiners subject to the Geographic Phase-in Area (GPA) provisions of the Tier 2 gasoline sulfur program, which will allow them the option of staggering their gasoline and diesel investments. Finally, we are adopting a general hardship provision for which any refiner may apply on a case-by-case basis under certain conditions. These hardship provisions, coupled with the temporary compliance option, will provide a ''safety valve'' allowing up to 25 percent of highway diesel fuel produced to remain at 500 ppm for these transitional years to minimize any potential for highway diesel fuel supply problems.

In addition, today's program includes unique provisions for implementing the low sulfur diesel fuel program in the State of Alaska, given that it is exempt from the current 500 ppm standard. Certain U.S. territories are excluded from both the new engine standards and highway diesel fuel standards.

The compliance provisions for ensuring diesel fuel quality are essentially consistent with those that have been in effect since 1993 under the existing 500 ppm sulfur standard (55 FR 34120, August 21, 1990). Additional compliance provisions have been established primarily during the transition years of the program to verify refiners' compliance with the temporary compliance option to ensure the two grades of highway diesel fuel remain segregated, and to discourage misfueling of model year 2007 and later diesel vehicles.

B. Why is EPA Taking This Action?

1. Heavy-Duty Vehicles Contribute to Serious Air Pollution Problems

As discussed in detail in Section II, emissions from heavy-duty vehicles contribute greatly to a number of serious air pollution problems, and would have continued to do so into the future absent further controls to reduce these emissions. First, heavy-duty vehicles contribute to the health and welfare effects of ozone, PM, NO_X, SO_X, and volatile organic compounds (VOCs), including toxic compounds such as formaldehyde. These adverse effects include premature mortality, aggravation of respiratory and cardiovascular disease (as indicated by increased hospital admissions and emergency room visits, school absences, work loss days, and restricted activity days), changes in lung function and increased respiratory symptoms, changes to lung tissues and structures, altered respiratory defense mechanisms, chronic bronchitis, and decreased lung function. Ozone also causes crop and forestry losses, and PM causes damage to materials and soiling of commonly used building materials and culturally important items such as statues and works of art. Second, NO_X, SO_X and PM contribute to substantial visibility impairment in many parts of the U.S. Third, NO_X emissions from heavy-duty trucks contribute to the acidification, nitrification and eutrophication of water bodies. Fourth, the Agency has concluded, and the Clean Air Scientific Advisory Committee has approved in public session, that diesel exhaust is likely to be carcinogenic to humans.

Millions of Americans live in areas with unhealthful air quality that currently endangers public health and welfare. Without emission reductions from the standards for heavy-duty vehicles, there is a significant risk that an appreciable number of 45 areas with 128 million people across the country will violate the 1-hour ozone national ambient air quality standard (NAAQS) during the period when these standards will take effect. Furthermore, our analysis shows that PM_{10} concentrations in 10 areas with a population of 28 million people face a significant risk of exceeding the PM_{10} NAAQS without significant additional controls between 2007 and 2030. Under the mandates and authorities in the Clean Air Act, Federal, state, and local governments are working to bring ozone and particulate levels into compliance with the 1-hour ozone and PM_{10} NAAQS through State Implementation Plan (SIP) attainment and maintenance plans, and to ensure that future air quality reaches and continues to achieve these health-based standards. The reductions in this rulemaking will play a critical part in these important efforts to attain and maintain the NAAQS. In addition, reductions from this action will also reduce public health and welfare effects associated with ozone and fine PM at concentrations that do not constitute a violation of the 1-hour ozone and PM_{10} NAAQS.

Emissions from heavy-duty vehicles account for substantial portions of the country's ambient PM and NO_X levels. (NO_X is a key precursor to ozone formation). By 2007, we estimate that heavy-duty vehicles will account for 28 percent of mobile source NO_X emissions and 20 percent of mobile source PM emissions. These proportions are even

EXHIBIT J

higher in some urban areas, such as in Sacramento, Atlanta, and Washington, DC, where HDVs contribute over 34 percent of the mobile source NO_X emissions, and in Santa Fe, Los Angeles, and Hartford, where heavy-duty vehicle PM emissions account for 38, 25 and 30 percent of the mobile source PM emissions inventory, respectively. Over time, the relative contribution of diesel engines to air quality problems will go even higher if diesel-equipped light-duty vehicles become more popular, as is expected by some automobile manufacturers. The PM and NO_X standards for heavy-duty vehicles in this rule will have a substantial impact on emissions. By 2030, NO_X emissions from heavy-duty vehicles under today's standards will be reduced by 2.6 million tons, and PM emissions will decline by about 109,000 tons, dramatically reducing this source of NO_X and PM emissions. Urban areas, which include many poorer neighborhoods, can be disproportionately impacted by HDV emissions, and these neighborhoods will thus receive a relatively larger portion of the benefits expected from new HDV emissions controls.

In addition to its contribution to PM inventories, diesel exhaust PM is of special concern because it has been implicated in an increased risk of lung cancer and respiratory disease. The EPA draft Health Assessment Document for Diesel Exhaust (Draft Assessment) was reviewed in public session by the Clean Air Scientific Advisory Committee (CASAC) on October 12–13, 2000.[3] The Agency has concluded, and the CASAC approved at this session, that diesel exhaust is likely to be carcinogenic to humans. State and local governments, in their efforts to protect the health of their citizens and comply with requirements of the Clean Air Act (CAA or ''the Act''), have recognized the need to achieve major reductions in diesel PM emissions, and have been seeking Agency action in setting stringent new standards to bring this about.[4]

2. Technology-Based Solutions

Although the air quality problems caused by diesel exhaust are challenging, we believe they can be resolved through the application of high-efficiency emissions control technologies. As discussed in detail in Section III, the development of diesel emissions control technology has advanced in recent years so that very large emission reductions (in excess of 90 percent) are possible, especially through the use of catalytic emission control devices installed in the vehicle's exhaust system and integrated with the engine controls. These devices are often referred to as ''exhaust emission control'' or ''aftertreatment'' devices. Exhaust emission control devices, in the form of the well-known catalytic converter, have been used in gasoline-fueled automobiles for 25 years, but have had only limited application in diesel vehicles.

Based on the Clean Air Act requirements discussed in Section I.B.3, we are setting stringent new emission standards that will result in the use of these diesel exhaust emission control devices (see Section III). We are also finalizing changes to diesel fuel quality standards in order to enable these high-efficiency technologies (Section IV). Heavy-duty gasoline engines will also be able to reach the significantly lower emission levels envisioned in this rule by relying on the transfer of recent technology developments for light-duty applications, given the recent action taken to reduce sulfur in gasoline (65 FR 6698, February 10, 2000).

To meet the new standards, application of high-efficiency exhaust emission controls for both PM and NO_X will be needed. High-efficiency PM exhaust emission control technology has been available for several years, although engine manufacturers have generally not needed this technology in order to meet our PM emission standards. This technology has continued to improve over the years, especially with respect to durability and robust operation in use. It has also proven extremely effective in reducing exhaust hydrocarbon emissions. Thousands of such systems are now in use in fleet programs, especially in Europe. However, as discussed in detail in Section III, these systems are very sensitive to sulfur in the fuel. For the technology to be viable and capable of meeting the standards, we believe that it will require diesel fuel with sulfur content capped at the 15 ppm level.

Similarly, high-efficiency NO_X exhaust emission control technology will be needed if heavy-duty vehicles are to attain the new standards. We believe this technology, like the PM technology, is dependent on the 15 ppm maximum diesel fuel sulfur levels being adopted in this rule to be feasible and capable of achieving the standards. Similar high-efficiency NO_X exhaust emission control technology has been quite successful in gasoline direct injection engines that operate with an exhaust composition fairly similar to diesel exhaust. However, as discussed in Section III, application of this technology to diesels has some additional engineering challenges. In that section we discuss the current status of this technology. We also discuss the major development issues still to be addressed and the development steps that can be taken to address these issues. With the lead time available and the certainty of low-sulfur diesel fuel established by today's action, the evidence leaves us confident that the application of this technology to diesels will proceed at a reasonable rate of progress and will result in systems capable of achieving the standards.

The need to reduce the sulfur in diesel fuel is driven by the requirements of the exhaust emission control technology that we project will be needed to meet the standards. The challenge in accomplishing the sulfur reduction is driven by the feasibility of needed refinery modifications, and by the costs of making the modifications and running the equipment. Today, a number of refiners are acting to provide low sulfur diesel to some markets. In consideration of the impacts that sulfur has on the efficiency, reliability, and fuel economy impact of diesel engine exhaust emission control devices, we believe that controlling the sulfur content of highway diesel fuel to the 15 ppm level is necessary and feasible, and, in the context of this rule's overall program, cost effective.

3. Basis For Action Under the Clean Air Act

Section 202(a)(1) of the Act directs us to establish standards regulating the emission of any air pollutant from any class or classes of new motor vehicles or engines that, in the Administrator's judgment, cause or contribute to air pollution which may reasonably be anticipated to endanger public health or welfare. Section 202(a)(3) requires that EPA set standards for heavy-duty trucks that reflect the greatest degree of emission reduction achievable through the application of technology which we determine will be available for the model year to which the standards apply. We are to give appropriate consideration to cost, energy, and safety factors associated with the application of such technology. We may revise such technology-based standards, taking costs into account, on the basis of information concerning the effects of air pollution from heavy-duty vehicles or engines and other sources of mobile source related

[3] EPA (2000) Review of EPA's Health Assessment Document for Diesel Exhaust (EPA 600/8–90/057E). Review by the Clean Air Scientific Advisory Committee (CASAC) December 2000. EPA–SAB–CASAC–01–003.

[4] For example, see letter dated July 13, 1999 from John Elston and Richard Baldwin on behalf of the State and Territorial Air Pollution Program Administrators and the Association of Local Air Pollution Control Officials (docket A–99–06, item II–D–78).

EXHIBIT J

pollutants on the public health and welfare. Section 202(a)(3)(C) requires that promulgated standards apply for no less than three years and go into effect no less than 4 years after promulgation. This rule conforms with these statutory requirements.

We believe the evidence provided in Section III and the Regulatory Impact Analysis (RIA) indicates that the stringent emission standards finalized today are feasible and reflect the greatest degree of emission reduction achievable in the model years to which they apply. We have given appropriate consideration to costs in choosing these standards. Our review of the costs and cost-effectiveness of these standards indicate that they will be reasonable and comparable to the cost-effectiveness of other emission reduction strategies that have been required or could be required in the future. We have also reviewed and given appropriate consideration to the energy factors of this rule in terms of fuel efficiency and effects on diesel fuel supply, production, and distribution, as discussed below, as well as any safety factors associated with these standards.

The information regarding air quality and the contribution of heavy-duty engines to air pollution in Section II and the RIA provides strong evidence that emissions from such engines significantly and adversely impact public health or welfare. First, there is a significant risk that several areas will fail to attain or maintain compliance with the NAAQS for 1-hour ozone concentrations or PM_{10} concentrations during the period that these new vehicle and engine standards will be phased into the vehicle population, and that heavy-duty engines contribute to such concentrations, as well as to concentrations of other NAAQS-related pollutants. This risk will be significantly reduced by the standards adopted today; however, the evidence indicates that some risk remains even after the reductions achieved by these new controls on heavy-duty vehicles and diesel fuel. Second, EPA believes that diesel exhaust is likely to be carcinogenic to humans. The risk associated with exposure to diesel exhaust includes the particulate and gaseous components. Some of the toxic air pollutants associated with emissions from heavy-duty vehicles and engines include benzene, formaldehyde, acetaldehyde, dioxin, acrolein, and 1,3-butadiene. Third, emissions from heavy-duty engines contribute to regional haze and impaired visibility across the nation, as well as acid deposition, POM deposition, eutrophication and nitrification, all of which are serious environmental welfare problems.

Based on this evidence, EPA believes that, for purposes of section 202(a)(1), emissions of NO_X, VOCs, SO_x and PM from heavy-duty trucks can reasonably be anticipated to endanger the public health or welfare. In addition, this evidence indicates that it will not be appropriate to modify the technology-based standards pursuant to section 202(a)(3)(B). EPA believes that it is required under section 202(a)(3)(A) to set technology-based standards that meet the criteria of that provision, and is not required to make an affirmative determination under section 202(a)(1). Instead EPA is authorized to take air quality into consideration under section 202(a)(3)(B) in deciding whether to modify or not set standard under section 202(a)(3)(A). In this case, however, EPA believes the evidence fully supports a determination under section 202(a)(1) to set standards, and a determination not to modify such standards under section 202(a)(3)(B).

In addition, there is significant evidence that emissions from heavy-duty trucks contribute to levels of ozone such that large segments of the national population are expected to experience prolonged exposure over several hours at levels that present serious concern for the public health and welfare. The same is true for exposure to fine PM. These public health and welfare problems are expected to occur in many parts of the country, including areas that are in compliance with the 1-hour ozone and PM_{10} NAAQS (PM_{10} is particulate matter that is 10 microns or smaller). This evidence is an additional reason why the controls finalized today are justified and appropriate under the Act. While EPA sees this as additional support for this action, EPA also believes that the evidence of air pollution problems summarized above and described in greater detail elsewhere is an adequate justification for this rule independent of concern over prolonged exposure to ozone and fine PM levels.

Section 211(c) of the CAA allows us to regulate fuels where emission products of the fuel either: (1) Cause or contribute to air pollution that reasonably may be anticipated to endanger public health or welfare, or (2) will impair to a significant degree the performance of any emission control device or system which is in general use, or which the Administrator finds has been developed to a point where in a reasonable time it will be in general use were such a regulation to be promulgated. This rule meets each of these criteria. The discussion of the first test is substantially the same as the above discussion for the heavy-duty engine standards, because SO_x and sulfate PM emissions from heavy-duty diesel vehicles are due to sulfur in diesel fuel. The substantial adverse effect of high diesel sulfur levels on diesel control devices or systems expected to be used to meet the heavy-duty standards is discussed in depth in Section III.F and in the RIA. In addition, our authority under section 211(c) is discussed in more detail in Appendix A to the RIA.

C. Putting This Rule In Perspective

There are several helpful perspectives to establish in understanding the context for this rule: the growing popularity of diesel engines, past progress and new developments in diesel emissions control, Tier 2 light-duty emission standards and other related EPA initiatives (besides the above-discussed rulemaking for highway heavy-duty engine emission standards in 2004), and recent actions and plans to control diesel emissions by the States and in other countries.

1. Diesel Popularity

The diesel engine is increasingly becoming a vital workhorse in the United States, moving much of the nation's freight, and carrying out much of its farm, construction, and other labor. Diesel engine sales have grown significantly over the last decade, so that now about a million new diesel engines are put to work in the U.S. every year. Unfortunately, these diesel engines emit large quantities of harmful pollutants annually.

Furthermore, although diesel emissions in this country come mostly from heavy-duty trucks and nonroad equipment, an additional source may grow out of auto manufacturers' plans to greatly increase the sales of diesel-powered light-duty vehicles (LDVs) and especially of light-duty trucks (LDTs), a category that includes the fast-selling sport-utility vehicles, minivans, and pickup trucks. These plans reflect the continuation of an ongoing dieselization trend, a trend recently most evident in the growing popularity of diesel-powered light heavy-duty trucks (8500 to 19,500 pounds). Diesel market penetration is working its way from larger to smaller highway applications and to a broader array of nonroad equipment applications. Finally, especially in Europe where diesels have already gained a broad consumer acceptance, the diesel engine is increasingly viewed as an attractive technology option for reducing emissions of gases that contribute to

EXHIBIT J

global warming, because it has greater operating efficiency than a gasoline engine.

2. Past Progress and New Developments

Since the 1970's, highway diesel engine designers have employed numerous strategies to meet our emissions standards, beginning with smoke controls, and focusing in the 1990's on increasingly stringent NO_X, hydrocarbon, and PM standards. These strategies have generally focused on reducing engine-out emissions and not on exhaust emission controls, although relatively low-efficiency oxidation catalysts have been applied in some designs to reduce PM, with the recognition that their effectiveness is limited by sulfur in the fuel. On the fuel side, we set quality standards that provided emissions benefits by limiting the amount of sulfur and aromatics in highway diesel fuel beginning in 1993 (55 FR 34120, August 21, 1990). Our most recent round of standard setting for heavy-duty highway diesels occurred in 1997 (62 FR 54693, October 21, 1997), effective with the 2004 model year. These standards were recently reviewed in a final rulemaking (65 FR 59896, October 6, 2000). These actions will result in engines that emit only a fraction of the NO_X, hydrocarbons, and PM produced by engines manufactured just a decade ago. We consider this an important first phase of our current initiative to reconcile the diesel engine with the environment.

Nevertheless, certain characteristics inherent in the way diesel fuel combustion occurs have prevented achievement of emission levels comparable to those of today's gasoline-fueled vehicles. Although diesel engines provide advantages in terms of fuel economy, durability, and evaporative emissions, and have inherently low exhaust emissions of hydrocarbons and carbon monoxide, controlling NO_X emissions is a greater challenge for diesel engines than for gasoline engines, primarily because of the ineffectiveness of three-way catalysis in the oxygen-rich and relatively cool diesel exhaust environment. Similarly, PM emissions, which are inherently low for properly operating gasoline engines, are more difficult to control in diesel engines, because the diesel combustion process tends to form soot particles. The challenge is somewhat complicated by the fact that historical diesel NO_X control approaches tend to increase PM, and vice versa, but both are harmful pollutants that need to be controlled.

Considering the air quality impacts of diesel engines and the potential for growth of diesels in the lighter-duty portion of the market, it is imperative that progress in diesel emissions control continue. Significant progress has already been made in the design of exhaust emission control devices for diesel applications, driven in part by the challenge presented by the stringent Tier 2 standards for light-duty vehicles. As discussed in detail in Section III, new exhaust emission control technologies for NO_X, PM, and hydrocarbon reduction will allow a major advancement in diesel emissions control of a magnitude comparable to that ushered in by the automotive catalytic converter in the 1970's. However, changes in diesel fuel quality will be needed to enable these high-efficiency exhaust emission control devices.

3. Tier 2 Emissions Standards

Auto manufacturers' design plans for new light-duty diesel vehicle models will be greatly affected by our recent adoption of stringent new emission standards for light-duty highway vehicles (referred to as ''Tier 2'' standards) that will phase in between 2004 and 2009. These Tier 2 standards will require significant improvements in electronic engine controls and catalysts on gasoline vehicles. We anticipate that these advances will be transferred over to heavy-duty gasoline vehicles in meeting the standards finalized in this rule. The Tier 2 NO_X and PM standards, that apply equally to gasoline and diesel vehicles, will also require the use of high-efficiency emission control technologies on light-duty diesel vehicles. The low sulfur highway diesel fuel brought about by this rule will make it possible for designers to employ these high-efficiency exhaust emission control technologies in these light-duty applications. The timing of the fuel change provides for the use of these devices in time to satisfy Tier 2 phase-in requirements.

The Tier 2 program phases in interim and final standards over a number of years, providing manufacturers the option of delaying some of their production of final Tier 2 designs until later in the phase-in. For vehicles up to 6000 lbs GVWR (LDVs) and light light-duty trucks (LLDTs)), the interim standards begin in 2004 and phase out by 2007, as they are replaced by the final Tier 2 standards. For vehicles between 6000 and 8500 lbs (heavy light-duty trucks (HLDTs)), the interim standards begin in 2004 and phase out by 2009 as they are replaced by the final Tier 2 standards. A new category of vehicles between 8,500 and 10,000 lbs, medium-duty passenger vehicles (MDPVs), will follow the same phase-in schedule as HLDTs.

Our assessment in the Tier 2 final rule is that the interim standards are feasible for diesel vehicles without a need for fuel quality changes. Manufacturers can take advantage of the flexibilities provided in the Tier 2 program to delay the need for light-duty diesels to meet the final Tier 2 levels until late in the phase-in period (as late as 2007 for LDVs and LLDTs, and 2009 for HLDTs and MDPVs). However, low sulfur fuel is expected to be needed for diesel vehicles designed to meet the final NO_X and PM standards, because these vehicles are likely to employ light-duty versions of the sulfur-sensitive exhaust emission control technologies discussed in Section III. The gasoline quality changes and light-duty gasoline engine developments that will result from the Tier 2 rule will also help make it feasible for heavy-duty gasoline engines to meet the standards in this rule.

4. Mobile Source Air Toxics Rulemaking

Passenger cars, on-highway trucks, and nonroad equipment emit hundreds of different compounds and elements. Several of these are considered to be known, likely, or possible human carcinogens. These include diesel exhaust, plus several VOCs such as acetaldehyde, benzene, 1,3-butadiene, formaldehyde, and acrolein. Trace metals may also be present in heavy-duty diesel engine emissions, resulting from metals in fuels and lubricating oil, and from engine wear. Several of these metals have carcinogenic and mutagenic effects.

Important reductions in these and other mobile source air toxics have occurred under existing programs established under Clean Air Act Sections 202(a) (on-highway engine requirements), 211 (the fuel requirements), and 213 (nonroad engine requirements). Although these programs are primarily designed for control of criteria pollutants, especially ozone and PM_{10}, they also achieve important reductions in diesel PM and gaseous air toxics through VOC and hydrocarbon controls.

In addition to these programs, Section 202(l)(2) of the Act directs us to consider additional controls to reduce emissions of hazardous air pollutants from motor vehicles, their fuels, or both. Those standards are to reflect the greatest degree of emission reduction achievable through the application of technology which will be available, taking into account existing standards, costs, noise, energy, and safety factors. We published a proposed rule on mobile source air toxics on August 4,

EXHIBIT J

2000 (65 FR 48058). This MSAT final rule was signed on December 20, 2000. Interested parties should refer to the final rule if interested in the ultimate form of the regulation.

The mobile source air toxics (MSATs) rule consists of four parts. First, we identify a list of 21 MSATs that are known to be emitted from motor vehicles or their fuels and are considered by the Agency to pose potential adverse human health risks. Diesel exhaust is included on this MSAT list because, as discussed in Section II, human epidemiological studies have suggested that diesel exhaust is associated with increased risk of adverse respiratory effects and lung cancer. Second, the MSAT rule considers the contribution of mobile sources to the nation's air toxics inventory and evaluates the toxics benefits of existing mobile source emission control programs. The benefits of the program as proposed are included in this analysis. Third, the MSAT final rule considers whether additional controls are appropriate at this time, given technological feasibility, cost, and the other criteria specified in the Act. The final rule includes a toxics performance standard applicable to reformulated gasoline and anti-dumping standards that apply to conventional gasoline. With regard to additional vehicle-based controls, we proposed that it is not appropriate at this time to set more stringent standards than the technology forcing standards found in this rule and our recently adopted Tier 2 rulemaking. Finally, because of our concern about the potential future health impacts of exposure to the public of air toxics from the remaining emissions from mobile sources in the future, we continue our toxics-related research activities and to conduct a future rulemaking to evaluate whether, based on the additional data, additional mobile source air toxics controls should be adopted. This rulemaking would be completed no later than 2004.

EPA also intends to rely on today's rule to satisfy in part its obligations under section 202(l) of the Clean Air Act. In the mobile source air toxics NPRM, the Agency proposed a list of mobile source air toxics, including diesel exhaust, as well as a number of specific constituents of heavy-duty vehicle exhaust (gasoline and diesel).[5] The emissions standards established in today's action result in the greatest achievable reductions of diesel PM and heavy-duty vehicle NMHC. The Agency is scheduled to finalize the mobile source air toxics rulemaking on or before December 20, 2000.

5. Nonroad Engine Standards and Fuel

Although this rule covers only highway diesel engines and fuel, it is clear that potential requirements for nonroad diesel engines and fuel are related. It is expected that nonroad diesel fuel quality, currently unregulated, may need to be controlled in the future in order to reduce the large contribution of nonroad engines to NO_X and PM inventories. Refiners, fuel distributors, states, environmental organizations, and others have asked that we provide as much information as possible about the future specifications for both types of fuel as early as possible.

We do plan to give further consideration to additional control of nonroad engine emissions. As discussed below in Section VIII, an effective control program for these engines requires the resolution of several major issues relating to engine emission control technologies and how they are affected by fuel sulfur content. The many issues connected with any rulemaking for nonroad engines and fuel warrant serious attention, and we believe it is premature for us to take any action on this initiative in this rule. We plan to initiate action in the future to formulate proposals that would address both nonroad diesel fuel and engines.

6. State Initiatives

The California Air Resources Board (ARB) and local air quality management districts within California are also pursuing measures to better control diesel emissions. Key among these efforts is work resulting from the Board's designation of particulate emissions from diesel-fueled engines as a toxic air contaminant (TAC) on August 27, 1998. TACs are air pollutants that may cause or contribute to an increase in death or serious illness or may pose a present or future hazard to human health. The TAC designation was based on research studies showing that emissions from diesel-fueled engines may cause cancer in animals and humans, and that workers exposed to higher levels of emissions from diesel-fueled engines are more likely to develop lung cancer.

In September 2000 the ARB approved a Diesel Risk Reduction Plan developed by its staff following an extensive public process.[6] This plan includes several California measures related to highway diesel vehicles, including the major elements of the program we are establishing on a nationwide basis in this final rule. Because truck travel from other states has a large effect on California's air quality, the plan and the Board's resolution further encourages the EPA adopt this nationwide program, as well as other diesel-related emissions reduction programs.

The ARB has also adopted stringent new emission requirements for urban transit buses and is considering similar requirements for school buses.[7] This program is aimed at encouraging the use of clean alternative fuels and high-efficiency diesel emission control technologies. Their program includes requirements for zero-emissions buses, fleet average NO_X levels, and retrofits for PM control, as well as model year 2007 NO_X and PM standards levels of 0.2 and 0.01 g/bhp-hr, respectively (equal to the levels finalized in this rule). It also requires that all diesel fuel used by transit agencies after July 1, 2002 must meet a cap of 15 ppm sulfur. This is a much earlier schedule than that finalized in this rule, to support the ARB's proposed transit bus fleet program.

Other states, most notably Texas, have taken steps toward adopting programs for cleaner diesel fuel and cleaner diesel engines. On December 6, 2000, the Texas Natural Resource Conservation Commission adopted a program that, among other things, would require the capping of diesel fuel sulfur levels in many counties to 15 ppm by June 2006.[8] This proposal exemplifies the importance that states with air quality problems have attached to clean diesel fuel, and specifically to the 15 ppm maximum sulfur requirement in 2006 being set in this rule

7. Retrofit Programs

Many States facing air quality improvement challenges have expressed strong interest in programs that will reduce emissions from existing highway and nonroad diesel engines through the retrofitting of these engines with improved emission control devices. The urban transit bus program adopted by the California ARB includes such a retrofit requirement as one of its major components (see Section I.C.6). In March 2000 we announced our own Diesel Retrofit Initiative to support and

[5] 65 FR 48058, August 4, 2000.

[6] State of California Air Resources Board Resolution 00–30, September 28, 2000.

[7] "Notice of Public Hearing To Consider the Adoption of a Public Transit Bus Fleet Rule and Emission Standards For New Urban Buses", California ARB, November 30, 1999, and ARB Resolution 00–2, dated February 24, 2000.

[8] Title 30, Texas Administrative Code, Chapter 114, Subchapter H, Division 2. Also see Texas Natural Resource Conservation Commission website www.tnrcc.state.tx.us.

EXHIBIT J

encourage fleet operators, air quality planners, and retrofit manufacturers in creating effective retrofit programs. These programs are appealing because the slow turnover of the diesel fleet to the new low-emitting engines makes it difficult to achieve near-term air quality goals through new engine programs alone. Some of the exhaust emission control technologies discussed in this rule are especially appealing for use in retrofits because they can be fitted to an existing vehicle as add-on devices without major engine modifications, although some of the more sophisticated systems that require careful control of engine parameters may be more challenging.

Because of the uncertainty at this time in how and when such programs may be implemented, our analysis for today's rule does not calculate any benefits from them. Nevertheless, we believe that this program can enable the viability of these retrofit technologies. We expect that large emission benefits from the existing fleet could be realized as a result of the fuel changes we are finalizing here, combined with retrofit versions of the technologies that will be developed in response to the finalized engine standards. These benefits will be especially important in the early years of the program when new vehicles standards are just beginning to have an impact, and when States and local areas need to gain large reductions to attain air quality goals.

8. Actions In Other Countries

There is substantial activity taking place in many countries related to the regulation of diesel fuel and engines. The large light-duty vehicle market share enjoyed by diesels in many European countries has helped to stir innovation in dealing with diesel emissions problems. Advanced emissions control technologies are being evaluated there in the in-use fleet and experience gained from these trials is helping to inform the diesel emissions control discussion in the U.S. In addition, several European countries have low sulfur diesel fuel, with maximum sulfur levels varying from 10 to 50 ppm, and so experience gained from the use of these fuels, though not completely transferable to the U.S. situation, also provides valuable experience. European Union countries will limit sulfur in diesel fuel to 50 ppm by 2005, and even more aggressive plans are being discussed or implemented. The United Kingdom made a rapid conversion to 50 ppm maximum sulfur diesel fuel in 1999 by offering tax incentives. This change occurred with much smaller refinery investments than had been predicted, and some refinery production there is actually at levels well below the 50 ppm cap. Germany is moving forward with plans to introduce a 10 ppm sulfur cap for diesel fuel by 2003, also via tax incentives, and is attempting to get the 50 ppm specification that was adopted by the European Commission revised downward to the 10 ppm cap level. The Commission is reviewing the implications of moving to this level.

One European country has had extensive experience with the transition to low sulfur diesel fuel. In the early 1990's, Sweden decided to take advantage of the environmental benefits of 10 ppm sulfur/low aromatics fuel by introducing it with a reduction in the diesel fuel tax. The program has been quite successful, and in excess of 90 percent of the highway diesel fuel used there is of this 10 ppm maximum sulfur class.[9]

The government of Canada has expressed its intent to harmonize its fuel regulations with the U.S. fuels standards being adopted today.[10] This would simplify the operation of new-technology vehicles that cross the U.S-Canada border. However, the success of the U.S. program does not depend on harmonized diesel fuel standards, and Section VI.H discusses how differences between the future fuel specifications in the U.S. and those in Canada and Mexico may be accommodated.

II. The Air Quality Need and Projected Benefits

A. Overview

Heavy-duty vehicle emissions contribute to air pollution with a wide range of adverse health and welfare impacts. Emissions of VOC, CO, NO_X, SO_x, and PM from HD vehicles contribute a substantial percentage of the precursors or direct components of ambient concentrations of ozone, PM, sulfur and nitrogen compounds, aldehydes, and substances known or considered likely to be carcinogens. Emissions of VOCs include some specific substances known or suspected to cause cancer. Of particular concern is human epidemiological evidence linking diesel exhaust to an increased risk of lung cancer, and the Agency is also concerned about the noncancer health effects of diesel exhaust We have finalized on December 20, 2000 a rule which lists diesel particulate matter and diesel exhaust organic gases as a mobile source air toxic under section 202(l) of the Clean Air Act, and the particulate matter standard finalized today reflects the greatest degree of emissions reductions achievable under section 202(l) for on-highway heavy-duty vehicle PM emissions. Heavy-duty vehicle emissions also cause adverse environmental effects including visibility reductions, acid rain, nitrification and eutrophication of water bodies.

Emissions from heavy-duty vehicles, which are predominantly diesel-powered, account for substantial portions of the country's ambient PM and ground-level ozone levels. By 2007, we estimate that heavy-duty vehicles will account for 28 percent of mobile source NO_X emissions (including highway and non-road), and 20 percent of mobile source PM emissions. These proportions are even higher in some urban areas, such as Atlanta and Los Angeles. Urban areas, which include many poorer neighborhoods, can be disproportionately impacted by HDV emissions because of heavy traffic in and out of densely populated urban areas.

The Agency developed new emissions inventories and conducted new air quality modeling for this rule to determine the risk of exposure to unhealthy ambient concentrations of ozone and particulate matter in 2007, 2020 and 2030. This analysis, supplemented with local air quality modeling and other information on emissions and air quality trends, indicates that an appreciable number of the 45 areas with a total population of 128 million people face a significant risk of violating the 1-hour ozone standard between 2007 and 2030. Ten PM_{10} nonattainment areas with 28 million people face a significant risk of experiencing particulate matter levels that violate the PM_{10} standard during the same period.

Under the mandates and authorities in the Clean Air Act, federal, state, and local governments are working to bring ozone and particulate levels into compliance with the 1-hour ozone and PM_{10} NAAQS through SIP attainment plans. Areas that reach attainment without reductions from this rule are likely to need additional reductions to ensure that future air quality continues to achieve ozone and PM standards, and areas that seek redesignation to attainment may use the reductions from this rule in future maintenance plans.

The heavy-duty vehicle and engine emission standards, along with the diesel fuel sulfur standard finalized today, will have a dramatic impact in

[9] Memo from Thomas M. Baines to Docket A–99–06, October 29, 1999, Docket #A–99–06, Item II–G–12.

[10] "Process Begins to Develop Long term Agenda to Reduce Air Pollution from Vehicles and Fuels", Environment Canada press release, May 26, 2000.

EXHIBIT J

reducing the large contribution of HDVs to air pollution. These standards will result in substantial benefits to public health and welfare through significant annual reductions in emissions of NO_X, PM, NMHC, carbon monoxide, sulfur dioxide, and air toxics. For example, we project a 1.8 million ton reduction in NO_X emissions from HD vehicles in 2020, which will increase to 2.6 million tons in 2030 when the current HD vehicle fleet is completely replaced with newer HD vehicles that comply with these emission standards. When coupled with the emission reductions projected to result from the Phase 1 (model year 2004) HDV standards, the emission reductions from heavy-duty vehicles are projected to be as large as the substantial reductions the Agency expects from light-duty vehicles as a result of its recently promulgated Tier 2 rulemaking.

In sum, the Agency's air quality modeling and other evidence demonstrates that ambient concentrations of ozone, particulate matter, sulfur and nitrogen compounds, VOCs, air toxics, CO and diesel exhaust are anticipated to endanger public health, welfare and the environment in the time period between 2007 and 2030. Emission reductions expected from today's action are predicted to lessen future ambient concentrations of ozone and particulate matter and associated adverse public health and welfare effects.

B. Public Health and Welfare Concerns

1. Health and Welfare Concerns Raised During Public Hearings

The Agency received a significant number of comments on this section during the public hearings and in written comments from interested parties. Comments are addressed in this section as well as in the Response to Comment document that accompanies this action.

Throughout the five public hearings held around the country on the proposed heavy-duty engine and diesel fuel rule, the Agency received strong public support at each venue for increasing the stringency of heavy-duty truck and bus emission standards, and for further controls on sulfur in diesel fuel, in order to enable the necessary exhaust emission control. In addition to the 55,000 comments received from citizens in support of the Agency proposal to clean diesel fuel by mid-2006 and reduce emissions from diesel engines in 2007, we received 8,500 comments from citizens urging the Agency to act prior to 2007.

Public officials and representatives of environmental, public health, or community-based organizations testified regularly about the link between public health ailments, such as asthma and lung cancer, and air pollution caused by diesel exhaust and particulate matter. In different ways, many noted that the impact of diesel soot is compounded by the fact that it is discharged at street level where people live and breathe. A regular complaint was the close proximity of bus depots, transfer terminals, and heavily-trafficked roadways to homes and apartment buildings, and in particular, to hospitals, playgrounds and schools. A common theme revolved around the notion that since asthma is an incurable disease, it was of utmost importance to help reduce the severity and frequency of attacks by reducing environmental triggers such as ozone, particulate matter and diesel exhaust.

Major industries represented during these public hearings were the heavy-duty vehicle engine manufacturers, the oil industry, and the commercial truckers. While each had a different perspective, most supported the underlying intent of the proposal to improve public health and welfare, and some also supported the specific requirements as proposed. For those who objected to the proposal, the main thrust of their concerns related to the stringency and public health necessity of the new standards and the diesel fuel sulfur requirement. Largely in their written comments, these industries raised questions about the need for additional reductions in order to meet existing ozone and PM national ambient air quality standards and took exception with the Agency's characterization of diesel exhaust as a human carcinogen at environmental levels of exposure. Some industry commenters also challenged the Agency's reliance on public welfare and environmental effects such as visibility impairment and eutrophication of water bodies because the Agency had insufficiently quantified the benefits that would result from new standards on heavy-duty vehicles and diesel fuel.

The following subsections present the available information on the air pollution situation that is likely to exist without this rule for each ambient pollutant. We also present information on the improvement that is expected to result from this rule.

2. Ozone and Its Precursors

a. Health and Welfare Effects From Short-Term Exposures to Ozone

NO_X and VOC are precursors in the photochemical reaction which forms tropospheric ozone. A large body of evidence shows that ozone can cause harmful respiratory effects including chest pain, coughing, and shortness of breath, which affect people with compromised respiratory systems most severely. When inhaled, ozone can cause acute respiratory problems; aggravate asthma; cause significant temporary decreases in lung function of 15 to over 20 percent in some healthy adults; cause inflammation of lung tissue; produce changes in lung tissue and structure; may increase hospital admissions and emergency room visits; and impair the body's immune system defenses, making people more susceptible to respiratory illnesses. Children and outdoor workers are likely to be exposed to elevated ambient levels of ozone during exercise and, therefore, are at greater risk of experiencing adverse health effects. Beyond its human health effects, ozone has been shown to injure plants, which has the effect of reducing crop yields and reducing productivity in forest ecosystems.

There is strong and convincing evidence that exposure to ozone is associated with exacerbation of asthma-related symptoms. Increases in ozone concentrations in the air have been associated with increases in hospitalization for respiratory causes for individuals with asthma, worsening of symptoms, decrements in lung function and increased medication use. Studies have also indicated that exposure to particulate matter can be associated with altered lung function and increased respiratory symptoms, and asthmatic children are considered to be particularly sensitive to these effects. In addition, exposures to particulate matter or ozone have been shown to have a priming effect for responsiveness to allergens, with the pollutant exposure leading to heightened responses to allergens among allergic asthmatics. It is not believed, based on the current evidence, that exposure to outdoor pollutants such as ozone or particulate matter is a cause of asthma.

Asthma is one of the most common and costly diseases in the United States. According to the President's Task Force on Environmental Health Risks and Safety Risks to Children, America is in the midst of an asthma epidemic.[11]

[11] *Asthma and the Environment: A Strategy to Protect Children, President's Task Force on*

EXHIBIT J

Since 1980, the number of asthma sufferers in the United States has more than doubled from 6.7 million to 17.3 million in 1998.[12] Today, more than 5 percent of the US population has asthma. On average, 15 people died every day from asthma in 1995, and the death rate has nearly tripled since 1975. In 1998, the cost of asthma to the U.S. economy was estimated to be $11.3 billion, with hospitalizations accounting for the single largest portion of the cost.[13] A recent report by the Pew Environmental Health Commission at Johns Hopkins School of Public Health estimates that by 2010, 22 million Americans will suffer from asthma, or one in 14 Americans and one in every five families.[14] At present, asthma cannot be cured, only controlled.

To address this growing public health problem, the President's Task Force on Environmental Health Risks and Safety Risks to Children ranked asthma as its highest priority. The President's Task Force created and charged the Asthma Priority Area Workgroup, co-chaired by EPA and the Department of Health and Human Services, with reviewing current Federal efforts to address the issue, and to make recommendations. In May, 2000, the Task Force issued a strategy that focused on developing a greater understanding of the role environmental factors associated with the onset of asthma; and triggers of asthma. The report found that ''children with asthma have long been recognized as particularly sensitive to outdoor air pollution,'' The report noted that ''25 percent of children in America live in areas that regularly exceed EPA limits for ozone.'' The first guiding principle was to focus efforts to ''eliminate the disproportionate impact of asthma in minority populations and those living in poverty.'' Testimony received during the Agency's five public hearings on this rule contained numerous references and detailed personal accounts as to the severe and sometimes fatal impact of asthma on the lives of American citizens.

b. Current and Future Nonattainment Status With the 1-Hour Ozone NAAQS

Today, ground level ozone remains a pervasive pollution problem in the United States. As of July, 2000, 102 million people (1999 census) lived in 31 metropolitan areas designated nonattainment under the 1-hour ozone NAAQS.[15] This is a sharp decline from the 101 nonattainment areas originally identified under the Clean Air Act Amendments of 1990, but elevated ozone concentrations remain a serious public health concern throughout the nation.

Over the last decade, declines in ozone levels were found mostly in urban areas, where emissions are heavily influenced by controls on mobile sources and their fuels.[16] Twenty-three metropolitan areas have realized a decline in ozone levels since 1989, but at the same time, ozone levels in 11 metropolitan areas with 7 million people have increased.[17] Regionally, California and the Northeast have recorded significant reductions in peak ozone levels, while four other regions (the Mid-Atlantic, the Southeast, the Central and Pacific Northwest) have seen ozone levels increase.

The highest ambient concentrations are currently found in suburban areas, consistent with downwind transport of emissions from urban centers. Concentrations in rural areas have risen to the levels previously found only in cities. Over the last decade, ozone levels at 17 of our National Parks have increased, and in 1998, ozone levels in two parks were 30 to 40 percent higher than the ozone NAAQS.

i. Results of Photochemical Ozone Modeling and Analysis of Emissions Inventories

In conjunction with this rulemaking, the Agency performed ozone air quality modeling for nearly the entire Eastern U.S covering metropolitan areas from Texas to the Northeast.[18] This ozone air quality modeling was based upon the same modeling system as was used in the Tier 2 air quality analysis, with the addition of updated inventory estimates for 2007 and 2030.[19] This modeling supports the conclusion that there is a broad set of areas with predicted ozone concentrations in 2007 and 2030 at or above 0.125 ppm, in the baseline scenarios without additional emission reductions. EPA established the 1-hour standard at 0.12 parts per million (ppm) daily maximum 1-hour average concentration not to be exceeded more than once per year on average. Compliance with the 1-hour standard is judged on the basis of the most recent three years of ambient air quality monitoring data.

We have compared and supplemented our own ozone modeling with other modeling studies, submitted to us as state implementation plan (SIP) revisions, or brought to our attention through our consultations with states on SIP revisions that are in development. The ozone modeling in the SIP revisions has the advantage of using emission inventories that are more specific to the area being modeled, and of using meteorological conditions selected specifically for each area. Also, the SIP revisions included other evidence and analysis, such as analysis of air quality and emissions trends, observation-based models that make use of data on concentrations of ozone precursors, alternative rollback analyses, and information on the responsiveness of the air quality model. For some areas, we decided that the predictions of 1-hour ozone exceedances from our modeling were less reliable than conclusions that could be drawn from this additional evidence and analysis. For example, in some areas our episodes did not capture the meteorological conditions that have caused high ozone, while local modeling did so. Thus, these local analyses are considered to be more extensive than our own modeling for estimating whether there would be NAAQS nonattainment without further emission reductions, when interpreted by a weight of evidence method which meets our guidance for such modeling.

Photochemical ozone modeling conducted for this rulemaking was based in part on updated national emissions inventories for all sources. National emission trends for NO_X

Environmental Health Risks and Safety Risks to Children, January 28, 1999, Revised May, 2000.

[12] *Asthma Prevention Program of the National Center for Environmental Health,* Centers for Disease Control and Prevention, ''At-A-Glance, 1999; Centers for Disease Control and Prevention, CDC, *Surveillance for Asthma—United States, 1960–1995,*'' MMWR 47 (No. SS-1) (April 1998).

[13] Asthma Statistics, National Institutes of Health, National, Heart, Lung, and Blood Institute, January, 1999.

[14] *Attack Asthma: Why America Needs A Public Health Defense System to Battle Environmental Threats,* Pew Environmental Health Commissions at the Johns Hopkins School of Public Health, June, 2000.

[15] Memorandum to Air Docket, September 18, 2000. Information on ozone nonattainment areas and populations as of July 31, 2000 from US EPA website www.epa.gov/airs/nonattn.html, USA Air Quality Nonattainment Areas, Office of Air Quality Planning and Standards.

[16] National Emissions Trends database.

[17] National Air Quality and Emissions Trends Report, 1998, March, 2000, at 28.

[18] EPA also performed ozone air quality modeling for the western United States but, as described further in the air quality technical support document, model predictions were well below corresponding ambient concentrations. Because of poor model performance for this region of the country, the results of western ozone modeling were not relied on for this rule.

[19] Consistent with a commitment expressed in the proposal, the Agency released the emissions inventory inputs for, and a description of, ozone modeling into the public record (docket number A–99–06), and also onto a website developed expressly for this purpose, on a continuous basis as they were developed. Further discussion of this modeling, including evaluations of model performance relative to predicted future air quality, is provided in the air quality modeling Technical Support Document (TSD).

EXHIBIT J

predict a significant decline from 1996 to 2007, a leveling off of the downward trend between 2007 to 2020, and an increase in NO_X inventories from 2020 to 2030. By 2030, national NO_X levels are estimated to reach levels that are within ten percent of 2007 levels. Predictions of national VOC emissions indicate a reduction from 1996 to 2007, followed by an increase between 2007 and 2030 resulting in 2030 levels that are estimated to be 10 percent greater than VOC emissions levels in 2007. In metropolitan ozone nonattainment areas, such as Charleston, Chicago and Houston, NO_X or VOC emissions in 2030 are predicted to reach or exceed 2007 levels. These estimated national and metropolitan area emissions inventories of ozone precursors are consistent with the conclusions reached by analysis of ozone modeling conducted for this rule that additional reductions are needed in order to enable areas to reach and maintain attainment of the ozone standard between 2007 and 2030.

The Agency conducted ozone modeling based on inventories developed with and without reductions from this rulemaking for three future years: 2007, 2020 and 2030. The year 2007 was chosen because it is also the first year of implementation for the new standards adopted in today's action. It is also the year that nine major urban areas with a history of persistent and elevated ozone concentrations must demonstrate attainment, and is also relevant to the South Coast Air Basin of California (South Coast) with an attainment date of 2010. In addition, modeling was performed for 2030 when the full benefits of the rule are expected to be realized and for 2020 which represents an intermediate year between the start of the program and full turnover of the affected vehicle fleet. The year 2020 is also representative of the period when areas that have come into attainment may need additional reductions in order to maintain the standard.

Today's rule will provide a substantial reduction in emissions of ozone precursors, particularly NO_X. These emissions reductions will greatly lower ozone concentrations which will help federal and State efforts to bring about attainment of the current 1-hour ozone standard. As described in the Air Quality Modeling Technical Support Document for this rule, EPA performed regional scale ozone modeling for the Eastern U.S. to assess the impacts of the controls in this rule on predicted 1-hour ozone exceedances. The results of this modeling were examined for those 37 areas in the East for which EPA's modeling predicted exceedances in 2007, 2020 and/or 2030 and current 1-hour design values are above the standard or within 10 percent of the standard. The results for these areas combined indicate that there will be substantial reductions in the number of exceedances and the magnitude of high ozone concentrations in both 2020 and 2030 due to this rule. The modeling also indicates that without the rule, exceedances would otherwise increase by 37 percent between 2020 and 2030 as growth in emissions offsets the reductions from Tier 2 and other current control programs.

For all areas combined, the rule is forecast to provide a 33 percent reduction in exceedances in 2020 and a 38 percent reduction in 2030. The total amount of ozone above the standard is expected to decline by nearly 37 percent in 2020 and 44 percent in 2030. Also, daily maximum ozone exceedances are lowered by 5 ppb on average in 2020 and nearly 7 ppb in 2030. The modeling forecasts an overall net reduction of 39 percent in exceedances from 2007, which is close to the start of this program, to 2030 when controls will be fully in place. In addition, the results for each individual area indicates that all areas are expected to have fewer exceedances in 2030 with the HDV controls than without this rule.

During the public comment period on the proposed rule, EPA received several comments that expressed concern about potential increases in ozone that might result from this rule. As indicated above, the air quality modeling results indicate an overall reduction in ozone levels in 2007 and 2030 during the various episodes modeled. Examining individual areas, nearly the entire country is projected to benefit substantially from the reductions in this rule.[20] There is a metropolitan area that EPA modeled as having exceedances with the one-hour ozone standard under baseline conditions in 2007 through 2030, which the Agency's modeling for the HDV rule estimated could have less than a 3 percent increase in its peak ozone levels in 2020 and 2030 and small net increase (i.e., less than 1 ppb) in levels above the 1-hour standard in 2030. However, EPA's air quality modeling did not predict an increase in the number of exceedances in this CMSA/MSA in 2020 and a decrease in exceedances occurred in 2030. In another CMSA/MSA in another State, in 2030 there was less than a one percent increase in the summer peak level. Yet, this area had fewer exceedances and lower ozone above the 1-hour standard in both 2020 and 2030 under the rule. EPA expects that the States will have State Implementation Plans that will consider federal controls and complement them with State actions to provide attainment and will work with the States to ensure this occurs.

Considering all of EPA's air quality modeling results, it is clear that the significant ozone reductions from this rule outweigh the limited ozone increases that may occur in the future assuming no additional reductions from federal or local controls. Additional details on this are provided in the Response to Comments document and in EPA's Heavy Duty Rule Air Quality Modeling Technical Support Document. Furthermore, EPA's Regulatory Impact Analysis for this rule shows significant health and welfare benefits occurring from the ozone reductions that the rule provides (see details on the benefits in Section V.F.5 of the preamble and Chapter VII of the RIA).

ii. Areas At Risk of Exceeding the 1-Hour Ozone Standard in the Future

This section presents the Agency's conclusions about the risk of future nonattainment for 45 areas listed in Table II.B–1 based on photochemical ozone modeling conducted for this rule and other evidence such as local air quality modeling.[21] The areas listed in Table II.B–1 are separated into two broad groups: (1) Those areas with attainment dates in 2007 or 2010 that will benefit from reductions from this rule to attain and maintain the standard; and (2) those areas with attainment dates prior to 2007 that will benefit from reductions from this rule to maintain the standard after their attainment dates. Because ozone concentrations causing violations of the 1-hour ozone standard are well established to endanger public health and welfare, this indicates that it is appropriate for the Agency to set new standards for heavy-duty vehicles. The following discussion follows these groupings from top to bottom. A more detailed discussion is found in the Regulatory Impact Analysis (RIA).

Ten metropolitan areas contained within designated ozone nonattainment areas have statutorily-defined attainment dates of 2007 or 2010, or

[20] The air quality modeling was performed for the Eastern region of the United States, but EPA also expects the rule to benefit nonattainment areas throughout the entire nation, including California.

[21] In the proposal, we relied on photochemical ozone modeling performed for recently promulgated standards on light duty vehicles, or Tier 2. The results presented in this final rulemaking for heavy-duty vehicles and diesel fuel are largely consistent with the findings presented in the proposal, with small differences due to updated emissions inventories. As stated in the proposal, the ozone modeling methodologies used in the proposal and presented here in the final rule are identical.

EXHIBIT J

have requested attainment date extensions to 2007. These 10 areas are listed at the top of Table II.B–1, and are New York City, Houston, Hartford, New London, Chicago, Milwaukee, Dallas, Beaumont-Port Arthur, Los Angeles, and Southeast Desert.

Each of these areas needs additional emission reductions in order to reach attainment by 2007, and to maintain the standards in the future. Some of these areas have emission reduction shortfalls that are identified in their attainment demonstrations (*i.e.,* South Coast Air Basin, New York and Houston), and reductions from this rule will assist State efforts to reach attainment.[22] Three other areas—Southeast Desert, Hartford, New London—are subject to ozone transport from upwind areas with identified shortfalls (South Coast and New York), and depend upon attainment from these upwind areas to reach attainment themselves. We have received attainment plans for two areas in Texas (Dallas and Beaumont-Port Arthur), and the Agency is likely to consider the reductions from this rule in its proposed approval of these attainment plans in **Federal Register** notices. Finally, there are two areas in the Midwest—Chicago and Milwaukee—that have incorporated reductions from this rule into their regional ozone modeling, and plan to rely on reductions from this rule to support their 2007 attainment demonstration.[23]

For all ten areas, even if all shortfalls were filled by the States, there is some risk that at least some of the areas will not attain the standards by their attainment dates of 2007, or 2010 for Los Angeles. In that event, the reductions associated with this program, which increase substantially after 2007, will help assure that any residual failures to attain are remedied. Finally, there is also some risk that the areas will be unable to maintain attainment after 2007. Considered collectively, there is a significant risk that some areas will not be in attainment throughout the period when the new standards will reduce heavy-duty vehicle emissions.

The rest of the areas have required attainment dates prior to 2007, or have no attainment date but are subject to a general obligation to have a SIP that provides for attainment and maintenance. These 34 areas, according to our modeling, are at risk of exceeding the ozone NAAQS between 2007 and 2030. These areas will be able to rely on reductions from this rule to continue to maintain the standard after attainment is reached, and will be able to take credit for this program in their maintenance plans when they seek redesignation to attainment of the ozone standard. If any of these areas reach attainment, and then fall back into nonattainment, or fail to reach attainment by 2007, reductions from this rule will assist these areas in achieving the ozone standard. If an area does not choose to seek redesignation, the continuing reductions from this rulemaking will help ensure maintenance (*i.e.,* prevent future exceedances) with the 1-hour standard after initial attainment is reached.

Areas with attainment dates prior to 2007 are presented in two groupings in the table at the end of this section: a group of 20 areas in the middle of Table II.B–1, and a group of 15 areas at the bottom of Table II.B–1. For the middle group of 20 areas, EPA and the States are pursuing the established statutory processes for attaining and maintaining the ozone standard, or have already redesignated these areas to attainment with a maintenance plan (*e.g.,* Cincinnati). EPA has re-instated the 1-hour ozone standard to some of these areas, restoring the applicability of these processes to them. The Agency believes that there is a significant risk that future air quality in a number of these areas will exceed the ozone standard at some time in the 2007 and later period. This belief is based on three factors: (1) Recent exceedances in 1997–1999, (2) predicted exceedances in 2007, 2020 or 2030 after accounting for existing mobile source requirements and other local or regional controls currently in place or required, and (3) our assessment of the magnitude of recent violations, the year-to-year variability of meteorological conditions conducive to ozone formation, transport from areas with later attainment dates, and other variables inherent in predicting future attainment such as the potential for some areas to experience unexpectedly high economic growth rates, growth in vehicle miles traveled, varying population growth from area to area, and differences in vehicle choice.

Only a subset of these 20 areas have yet adopted specific control measures that have allowed the Agency to fully approve an attainment plan. For some of these areas, we have proposed a finding, based on all the available evidence, that the area will attain by its applicable attainment date. We have approved a 10-year maintenance plan for Cincinnati, OH from 1999 to 2009. However, in many cases, these proposals depend on the State adopting additional emission reduction measures. The RIA provides more information on our recent proposals on attainment demonstrations and maintenance plans.[24] Until the SIPs for these areas are actually submitted, reviewed and approved by EPA, there is some risk that these areas will not adopt fully approvable SIPs.

Finally, there are 15 additional metropolitan areas for which the available ozone modeling and other evidence is less clear regarding the need for additional reductions (see Table II.B–1). Our ozone modeling predicted these areas to need further reductions to avoid exceedances in 2007, 2020 or 2030. The recent air quality monitoring data for these areas shows ozone levels with less than a 10 percent margin below the NAAQS. We believe there is a risk that future ozone levels will be above the NAAQS because of the year-to-year variability of meteorological conditions conducive to ozone formation, or because local emissions inventories may increase faster than national inventories.

iii. Conclusion

In sum, without these reductions, there is a significant risk that an appreciable number of the 45 areas, with a population of 128 million people in 1999, will violate the 1-hour ozone standard during the time period when these standards will apply to heavy-duty vehicles. The evidence summarized in this section, and presented in more detail in the air quality modeling TSD and the RIA, supports the Agency's belief that emissions of NO_X and VOC from heavy-duty vehicles in 2007 and later will contribute to a national ozone air pollution problem that warrants regulatory action under section 202(a)(3) of the Act.

[22] The South Coast's ''additional measures'' which rely on new technologies, are located in its 1994 SIP.

[23] Technical Support Document, Midwest Subregional Modeling: 1-Hour Attainment Demonstration for Lake Michigan Area and Emissions Inventory, Illinois Environmental Protection Agency, Indiana Department of Environmental Management, Michigan Department of Environmental Quality, Wisconsin Department of Natural Resources, September 27, 2000, at 14 and at 8.

[24] We have recently proposed favorable action, in some cases with a condition that more emission reductions be obtained, on attainment demonstrations in these areas with attainment dates prior to 2007: Philadelphia, Washington-Baltimore, Atlanta, and St. Louis.

EXHIBIT J

TABLE II.B–1 [a]

[Areas and 1999 Populations at Risk of Exceeding the Ozone Standard between 2007 and 2030]

MSA/CMSA/State	1999 Population (in millions)
Areas with 2007/2010 Attainment Dates (Established or Requested)	
Beaumont-Port Arthur, TX	0.4
Chicago-Gary-Kenosha, IL–IN–WI	8.9
Dallas-Fort Worth, TX	4.9
Hartford, CT	1.1
Houston-Galveston-Brazoria, TX	4.5
Los Angeles-Riverside-Orange County, CA	16.0
Milwaukee-Racine, WI	1.6
New London-Norwich, CT–RI	0.3
New York-Northern New Jersey-Long Island, NY–NJ–CT–PA	20.2
Southeast Desert, CA	0.5
10 areas	58.4
Areas with Pre-2007 Attainment Dates or No Specific Attainment Date, with a Recent History of Nonattainment.	
Atlanta, GA	3.9
Baton Rouge, LA	0.6
Birmingham, AL	0.9
Boston-Worcester-Lawrence, MA–HN–ME–CT	5.7
Charlotte-Gastonia-Rock Hill, NC–SC	1.4
Detroit-Ann Arbor-Flint, MI MSA	5.5
Huntington-Ashland, WV–KY–OH	0.3
Louisville, KY–IN	1.0
Macon, GA MSA	0.3
Memphis, TN–AR–MS	1.1
Nashville, TN	1.2
Philadelphia-Wilmington-Atlantic City, PA–NJ–DE–MD	6
Richmond-Petersburg, VA	1
Sacramento-Yolo, CA	1.7
San Diego, CA	2.8
San Francisco-Oakland-San Jose, CA	6.9
San Joaquin Valley, CA	3.2
St. Louis, MO–IL	2.6
Ventura County, CA	0.7
Washington, DC—Baltimore, DC, MD, VA MSA	7.4
20 Areas	54.2
Areas with Pre-2007 Attainment Dates and Recent Concentrations within 10 percent of an Exceedance.	
Barnstable-Yarmouth, MA	0.2
Benton Harbor, MI	0.2
Biloxi-Gulfport-Pascagoula, MS MSA	0.4
Charleston, WV MSA	0.3
Cincinnati-Hamilton, OH–KY–IN	2.0
Cleveland-Akron, OH CMSA	2.9
Grand Rapids-Muskegon-Holland, MI MSA	1.1
Houma, LA	0.2
Lake Charles, LA	0.2
New Orleans, LA MSA	1.3
Norfolk-Virginia Beach-Newport News, VA–NC MSA	1.6
Orlando, FL MSA	1.5
Pensacola, FL MSA	0.4
Providence-Fall River-Warwick, RI–MA	1.1
Tampa-St. Petersburg-Clearwater, FL MSA	2.3
15 areas	15.7
Total Areas: 45	Population: 128

[a] In order to determine the reliability of model predictions the Agency ran the ozone model for current ozone concentrations and compared those predictions with actual ozone levels recorded by ozone monitors. The results of the model's performance are presented in the RIA for this rule.

EXHIBIT J

c. Public Health and Welfare Concerns from Prolonged and Repeated Exposures to Ozone

A large body of scientific literature regarding health and welfare effects of ozone has associated health effects with certain patterns of ozone exposures that do not necessarily include any hourly ozone concentration above the 0.12 parts per million (ppm) level of the 1-hour NAAQS. The science indicates that there are health effects attributable to prolonged and repeated exposures to lower ozone concentrations. Studies of 6 to 8 hour exposures showed health effects from prolonged and repeated exposures at moderate levels of exertion to ozone concentrations as low as 0.08 ppm. Prolonged and repeated ozone concentrations at these levels are common in areas throughout the country, and are found in areas that are exceeding, and areas that are not exceeding, the 1-hour ozone standard. For example, 153 million people, or 87 percent of the total population in counties evaluated (176 million), lived in areas with 2 or more days with concentrations of 0.09 ppm or higher in 1998, including areas currently violating the 1-hour NAAQS. In the 2007, before the application of emission reductions resulting from this rule, we estimated that 116 million, or 93 percent of the total population considered in the analysis, are predicted to live in areas with at least 2 days with model-adjusted 8-hour average concentrations of 0.08 ppm or higher. By 2030, the number of people (139 million) and the relative percentage (91 percent) of the total population considered in the analysis is projected to grow significantly without reductions from this rule. Since prolonged exposures at moderate levels of ozone are more widespread than exceedances of the 1-hour ozone standard, and given the continuing nature of the 1-hour ozone problem described above, adverse health effects from this type of ozone exposure can reasonably be anticipated to occur in the future in the absence of this rule. Adverse welfare effects can also be anticipated, primarily from damage to vegetation. See the RIA for further details.

Studies of acute health effects have shown transient pulmonary function responses, transient respiratory symptoms, effects on exercise performance, increased airway responsiveness, increased susceptibility to respiratory infection, increased hospital and emergency room visits, and transient pulmonary respiratory inflammation. Such acute health effects have been observed following prolonged exposures at moderate levels of exertion at concentrations of ozone well below the current standard of 0.12 ppm. The effects are more pronounced at concentrations above 0.09 ppm, affecting more subjects or having a greater effect on a given subject in terms of functional changes or symptoms. A more detailed discussion may be found in the RIA.

With regard to chronic health effects, the collective data have many ambiguities, but provide suggestive evidence of chronic effects in humans. There is a biologically plausible basis for considering the possibility that repeated inflammation associated with exposure to ozone over a lifetime, as can occur with prolonged exposure to moderate ozone levels below peak levels, may result in sufficient damage to respiratory tissue that individuals later in life may experience a reduced quality of life, although such relationships remain highly uncertain.

Ozone has many welfare effects, with damage to plants being of most concern. Plant damage affects crop yields, forestry production, and ornamentals. The adverse effect of ozone on forests and other natural vegetation can in turn cause damage to associated ecosystems, with additional resulting economic losses, as well as aesthetic impacts which may not be fully quantifiable in economic terms. Ozone concentrations of 0.10 ppm can be phytotoxic to a large number of plant species, and can produce acute injury and reduced crop yield and biomass production. Ozone concentrations at or below 0.10 ppm have the potential over a longer duration of creating chronic stress on vegetation that can result in reduced plant growth and yield, shifts in competitive advantages in mixed populations, decreased vigor, and injury from other environmental stresses.

Section 202(a) provides EPA with authority to promulgate standards applicable to motor vehicle emissions that ''in the Administrator's judgment, cause or contribute to air pollution reasonably anticipated to endanger public health and welfare.'' The evidence in the RIA regarding the occurrence of adverse health effects due to prolonged and repeated exposure to ozone concentrations in the range discussed above, and regarding the populations that are expected to receive exposures at these levels, along with the welfare effects described above, supports a conclusion that emissions of NO_X and VOC from heavy-duty vehicles in 2007 and later will be contributing to a national air pollution problem that warrants regulatory action under section 202(a) of the Act.

3. Particulate Matter

a. Health and Welfare Effects

Particulate matter (PM) represents a broad class of chemically and physically diverse substances. It can be principally characterized as discrete particles that exist in the condensed (liquid or solid) phase spanning several orders of magnitude in size. All particles equal to and less than 10 microns are called PM_{10}. Fine particles can be generally defined as those particles with an aerodynamic diameter of 2.5 microns or less (also known as $PM_{2.5}$), and coarse fraction particles are those particles with an aerodynamic diameter greater than 2.5 microns, but equal to or less than a nominal 10 microns. The health and environmental effects of PM are strongly related to the size of the particles.

The emission sources, formation processes, chemical composition, atmospheric residence times, transport distances and other parameters of fine and coarse particles are distinct. Fine particles are directly emitted from combustion sources and are formed secondarily from gaseous precursors such as sulfur dioxide, nitrogen oxides, or organic compounds. Fine particles are generally composed of sulfate, nitrate, chloride and ammonium compounds; organic and elemental carbon; and metals. Combustion of coal, oil, diesel, gasoline, and wood, as well as high temperature process sources such as smelters and steel mills, produce emissions that contribute to fine particle formation. In contrast, coarse particles are typically mechanically generated by crushing or grinding and are often dominated by resuspended dusts and crustal material from paved or unpaved roads or from construction, farming, and mining activities. Fine particles can remain in the atmosphere for days to weeks and travel through the atmosphere hundreds to thousands of kilometers, while coarse particles deposit to the earth within minutes to hours and within tens of kilometers from the emission source.

Diesel particles are a component of both coarse and fine PM, but fall mostly in the fine and ultrafine size range.[25] Diesel PM contains small quantities of numerous mutagenic and carcinogenic compounds. While representing a very small portion (less than one percent) of the national emissions of metals, and a small portion of diesel particulate matter (one to five percent), we note that several toxic trace metals of potential

[25] Fine particulate matter includes particles with a diameter less than 2.5 micrometers. Ultrafine particulate matter include particles with a diameter less than 100 nanometers.

EXHIBIT J

toxicological significance are also emitted by diesel engines including chromium, manganese, mercury and nickel. In addition, small amounts of dioxins have been measured in diesel exhaust, some of which may partition into the particle phase, though the impact of these emissions on human health is not clear.

Particulate matter, like ozone, has been linked to a range of serious respiratory health problems. Scientific studies suggest a likely causal role of ambient particulate matter (which is attributable to a number of sources including diesel) in contributing to a series of health effects. The key health effects categories associated with ambient particulate matter include premature mortality, aggravation of respiratory and cardiovascular disease (as indicated by increased hospital admissions and emergency room visits, school absences, work loss days, and restricted activity days), aggravated asthma, acute respiratory symptoms, including aggravated coughing and difficult or painful breathing, chronic bronchitis, and decreased lung function that can be experienced as shortness of breath. Observable human noncancer health effects associated with exposure to diesel PM include some of the same health effects reported for ambient PM such as respiratory symptoms (cough, labored breathing, chest tightness, wheezing), and chronic respiratory disease (cough, phlegm, chronic bronchitis and suggestive evidence for decreases in pulmonary function). Symptoms of immunological effects such as wheezing and increased allergenicity are also seen. Studies in rodents, especially rats, show the potential for human inflammatory effects in the lung and consequential lung tissue damage from chronic diesel exhaust inhalation exposure. Both fine and coarse particles can accumulate in the respiratory system. Exposure to fine particles is most closely associated with such health effects as premature mortality or hospital admissions for cardiopulmonary disease. For additional information on health effects, see the RIA. PM also causes damage to materials and soiling of commonly used building materials and culturally important items such as statutes and works of art. It is a major cause of substantial visibility impairment in many parts of the U.S.

Heavy-duty vehicles contribute to particle formation through a number of pollutants. The contribution to PM fine varies by region of the country. Sulfate plays a major role in the composition of fine particulate across the country, but typically makes up over half the fine particles found in the Eastern United States. Organic carbon accounts for a large portion of fine particle mass, with a slightly higher fraction in the west. Diesel engines are the principal source of elemental carbon, which makes up about 5–6 percent of particle mass. Nationally, nitrate plays a relatively small role in the make up of fine particles, but ammonium nitrate plays a far larger role in southern California. Ammonium nitrate–formed secondarily from NO_X and ammonia emissions—is one of the most significant components of particulate matter pollution in California. During some of the worst episodes of elevated particle levels in the South Coast, ammonium nitrate can account for about 65–75 percent of the $PM_{2.5}$ mass. Reducing ammonium nitrate through controls on NO_X sources is a critical part of California's particulate matter strategy. Nationally, the standards finalized in this rule will significantly reduce HDV emissions of SO_X, NO_X, VOCs and elemental carbon, and thus contribute to reductions in ambient concentrations of PM_{10} and $PM_{2.5}$.

b. Attainment and Maintenance of the PM_{10} NAAQS

Under the CAA, we are to regulate HDV emissions if they contribute to air pollution that can reasonably be anticipated to endanger public health and welfare. We have already addressed the question of what concentration patterns of PM endanger public health, in setting the NAAQS for PM_{10} in 1987. The PM NAAQS were revised in 1997, largely by adding new standards for fine particles ($PM_{2.5}$) and modifying the form of the daily PM_{10} standard. On judicial review, the revised standards were remanded for further proceedings, and the revised PM_{10} standards were vacated. The Supreme Court is currently reviewing that decision. Oral arguments were held on November 7, 2000 and a decision by the Court is expected in 2001. Pending final resolution of the litigation, the 1987 PM_{10} standard is the applicable NAAQS for PM_{10}.

Commenters questioned the need for additional PM_{10} reductions in order to achieve attainment with the PM_{10} NAAQS, and questioned the Agency's statement that, unlike ozone, PM_{10} emissions are projected to increase in the future. Commenters are correct that significant progress has occurred over the last decade,[26] but the Agency's statement was based on projected PM_{10} inventory increases in the future between 1996 and 2030. During this period, inventory trends for current PM_{10} nonattainment areas, or those with concentrations within 10 percent of the standard, are predicted to increase significantly. For example, from 1996 to 2030, increases are predicted in Clark County (Las Vegas) of 41 percent, Harris County (Houston) of 37 percent, and Phoenix of 24 percent. A more detailed discussion is provided in the RIA.

i. Current PM_{10} Nonattainment

The most recent PM_{10} monitoring data indicates that 14 designated PM_{10} nonattainment areas with a projected population of 23 million violated the PM_{10} NAAQS in the period 1997–1999. Table II.B–3 lists the 14 areas, and also indicates the PM_{10} nonattainment classification and 1999 projected population for each PM_{10} nonattainment area. The projected population in 1999 was based on 1990 population figures which were then increased by the amount of population growth in the relevant county from 1990 to 1999.

TABLE II.B–3.—PM_{10} NONATTAINMENT AREAS VIOLATING THE PM_{10} NAAQS IN 1997–99

Area	Classification	1999 Population (projected, in millions)
Hayden/Miami, AZ	Moderate	0.004
Phoenix, AZ	Serious	2.977
Nogales, AZ	Moderate	0.025
San Joaquin Valley, CA	Serious	3.214
Imperial Valley, CA	Moderate	0.122

[26] Ambient concentrations of PM_{10} and PM_{10} emissions have declined over the last ten years by 25 percent and 19 percent, respectively. National Air Quality and Emissions Trends Report, 1998, US EPA, March, 2000.

EXHIBIT J

TABLE II.B–3.—PM_{10} NONATTAINMENT AREAS VIOLATING THE PM_{10} NAAQS IN 1997–99—Continued

Area	Classification	1999 Population (projected, in millions)
Owens Valley, CA	Serious	0.018
Searles Valley, CA	Moderate	0.029
Coachella Valley, CA	Serious	0.239
South Coast Air Basin	Serious	14.352
Las Vegas, NV	Serious	1.200
Reno, NV	Moderate	0.320
Anthony, NM [b]	Moderate	0.003
El Paso, TX [a]	Moderate	0.611
Wallula, WA [b]	Moderate	0.052
Total Areas: 14		23.167

[a] EPA has determined that continuing PM_{10} nonattainment in El Paso, TX is attributable to international transport under section 179(B).
[b] The violation in this area has been determined to be attributable to natural events under section 188(f) of the Act.

In addition to the 14 PM_{10} nonattainment areas that are currently violating the PM_{10} NAAQS, there are 25 unclassifiable areas that have recently recorded ambient concentrations of PM_{10} above the PM_{10} NAAQS. EPA adopted a policy in 1996 that allows areas with PM_{10} exceedances that are attributable to natural events to retain their designation as unclassifiable if the State is taking all reasonable measures to safeguard public health regardless of the sources of PM_{10} emissions. Areas that remain unclassifiable areas are not required under the Clean Air Act to submit attainment plans, but we work with each of these areas to understand the nature of the PM_{10} problem and to determine what best can be done to reduce it. With respect to the monitored violations reported in 1997–99 in the 25 areas designated as unclassifiable, we have not yet excluded the possibility that factors such as a one-time monitoring upset or natural events, which ordinarily would not result in an area being designated as nonattainment for PM_{10}, may be responsible for the problem. Emission reductions from today's action will assist these currently unclassifiable areas to achieve ambient PM_{10} concentrations below the current PM_{10} NAAQS.

ii. Risk of Future Exceedances of the PM_{10} Standard

The new standards for heavy-duty vehicles will benefit public health and welfare through reductions in direct diesel particles and NO_X, VOCs, and SO_X which contribute to secondary formation of particulate matter. Because ambient particle concentrations causing violations of the PM_{10} standard are well established to endanger public health and welfare, this information supports the new standards for heavy-duty vehicles. The reductions from today's rule will assist States as they work with the Agency through implementation of local controls including development and adoption of additional controls as needed to move their areas into attainment by the applicable deadline, and maintain the standards thereafter.

The Agency's PM inventory analysis performed for this rulemaking predicts that without additional reductions 10 areas face a significant risk of failing to meet or to maintain the PM_{10} NAAQS even with federal, State and local controls currently in place.[27] Table II.B–4 presents information about these 10 areas and subdivides them into two groups. The first group of 6 areas are designated PM_{10} nonattainment areas which had recent monitored violations of the PM_{10} NAAQS in 1997–1999 and increasing inventories of PM_{10} from 2007 to 2030 (see Table II.B–3 for predicted increases in emissions). These areas have a population of 19 million. Included in the group are the nonattainment areas that are part of the Los Angeles, Phoenix and Las Vegas (Clark County) metropolitan areas, where traffic from heavy-duty vehicles is substantial. These six areas will benefit from the reductions in emissions that will occur from the new standards for heavy-duty vehicles, as will other areas impacted by heavy-duty vehicle emissions.

The second group of four counties listed in Table II.B–4 with a total of nine million people in 1999 also had predicted exceedances of the PM_{10} standard. While these four areas registered, in either 1997 or 1998, single-year annual average monitored PM_{10} levels of at least 90 percent of the PM_{10} NAAQS, these areas did not exceed the formal definition of the PM_{10} NAAQS over the three-year period ending in 1999. For each of these four areas (i.e., Cuyahoga, Harris, New York, and San Diego), inventories of total PM_{10} are predicted to increase between 1996, when these areas recorded values within 10 percent of the PM_{10} standard, and 2030 when this rule will take full effect. Additionally, EPA is in the process of taking final action on a request by the State of Ohio to redesignate Cuyahoga County as attainment. This action is based on locally developed information and is consistent with the requirements of the CAA which include, among other requirements a 10-year plan for maintenance of the PM_{10} standard.

For some of these areas, total PM_{10} inventories are predicted to decline or stay relatively constant from 1996 to 2007, and then increase after 2007. Based on inventory projections, the small margin of attainment which the four areas currently enjoy will likely erode between 1996 and 2030, and for some areas before 2007, if additional actions to reduce the growth of future emissions are not taken. We therefore consider these four areas to each individually have a significant risk of exceeding the PM_{10} standard between 2007 and 2030 without further emission reductions. The emission reductions from the new standards for heavy-duty vehicles will help these areas attain and maintain the PM_{10} NAAQS in conjunction with other processes that

[27] EPA has evaluated projected emissions for this analysis rather than future air quality because REMSAD, the model EPA has used for analyses related to this rule, was designed principally to estimate long-term average concentrations of fine particulate matter and its ability to predict short-term PM_{10} concentrations has not been satisfactorily demonstrated. In contrast with ozone, which is the product of complex photochemical reactions and therefore difficult to directly relate to precursor emissions, ambient PM_{10} concentrations are more heavily influenced by direct emissions of particulate matter and can therefore be correlated more meaningfully with emissions inventories.

EXHIBIT J

are currently moving these areas towards attainment.

TABLE II.B–4—AREAS WITH SIGNIFICANT RISK OF EXCEEDING THE PM_{10} NAAQS WITHOUT FURTHER EMISSION REDUCTIONS BETWEEN 2007 AND 2030

Area	Percent increases in PM_{10} emissions (1996–2030)	1999 Population (projected) (millions)
Areas currently exceeding the PM_{10} standard:		
Clark Co., NV (Las Vegas)	41	1.217
El Paso, TX [a]	14	0.611
Hayden/Miami, AZ	4	0.004
Los Angeles South Coast Air Basin, CA	14	14.352
Nogales, AZ	3	0.025
Phoenix, AZ	24	3.012
Subtotal for 6 Areas		19.22
Areas within 10% of exceeding the PM_{10} standard:		
Cuyahoga Co., OH (Cleveland)	28	1.37
Harris, Co., TX (Houston)	37	3.26
New York Co., NY	14	1.55
San Diego Co., CA	13	2.83
Subtotal for 4 Areas		9.01
10 Areas		28.23

[a] EPA has determined that PM_{10} nonattainment in this area is attributable to international transport. While reductions in heavy-duty vehicle emissions cannot be expected to result in attainment, they will help reduce the degree of PM_{10} nonattainment.

EPA recognizes that the SIP process is ongoing and that nonattainment areas are in the process of implementing, or will be adopting and implementing, additional control measures to achieve the PM_{10} NAAQS in accordance with their attainment dates under the Clean Air Act. EPA believes, however, that as in the case of ozone, there are uncertainties inherent in any demonstration of attainment that is premised on forecasts of emission levels in future years. Even if these areas adopt and submit SIPs that EPA is able to approve as demonstrating attainment of the PM_{10} standard, and attain the standard by the appropriate attainment dates, the inventory analysis conducted for this rule and the history of PM_{10} levels in these areas indicates that there is still a significant risk that these areas will need the reductions from the heavy-duty vehicle standards adopted today to maintain the PM_{10} standards in the long term (ie, between 2007 and 2030). In addition, this list does not fully consider the possibility that there are other areas which are now meeting the PM_{10} NAAQS that have at least a significant probability of requiring further reductions to continue to maintain it.

c. Public Health and Welfare Concerns From Exposure to Fine PM

Many epidemiologic studies have shown statistically significant associations of ambient PM levels with a variety of human health endpoints in sensitive populations, including mortality, hospital admissions and emergency room visits, respiratory illness and symptoms measured in community surveys, and physiologic changes in mechanical pulmonary function. These effects have been observed in many areas with ambient PM levels at or below the current PM_{10} NAAQS. The epidemiologic science points to fine PM as being more strongly associated with some health effects, such as premature mortality, than coarse PM.

Associations of both short-term and long-term PM exposure with most of the above health endpoints have been consistently observed. The general internal consistency of the epidemiologic data base and available findings have led to increasing public health concern, due to the severity of several studied endpoints and the frequent demonstration of associations of health and physiologic effects with ambient PM levels at or below the current PM_{10} NAAQS. The weight of epidemiologic evidence suggests that ambient PM exposure has affected the public health of U.S. populations. Specifically, increased mortality associated with fine PM was observed in cities with longer-term average fine PM concentrations in the range of 16 to 21 $\mu g/m^3$.

Current 1999 $PM_{2.5}$ monitored values, which cover about a third of the nation's counties, indicate that at least 40 million people live in areas where long term ambient fine particulate matter levels are at or above 16 $\mu g/m^3$ (37 percent of the population in the areas with monitors), which is the low end of the range of long term average $PM_{2.5}$ concentrations in cities where statistically significant associations were found with serious health effects, including premature mortality (EPA, 1996).[28]

The Agency used the Regulatory Model System for Aerosols and Desposition (REMSAD) to model baseline and post-control ambient PM concentrations. For a description of the REMSAD model, the reader is referred to Chapter VII of the RIA.

Our REMSAD modeled predictions allow us to also estimate the affected population for the counties which do not currently have $PM_{2.5}$ monitors. According to our national modeled predictions, there were a total of 76

[28] EPA (1996) Review of the National Ambient Air Quality Standards for Particulate Matter: Policy Assessment of Scientific and Technical Information OAQPS Staff Paper. EPA–452/R–96–013.

EXHIBIT J

million people (1996 populations) living in areas with modeled annual average $PM_{2.5}$ concentrations at or above 16 μg/m^3 (29 percent of the population).[29]

The REMSAD model also allows us to estimate future $PM_{2.5}$ levels. However, the most appropriate method of making these projections relies on the model to predict changes between current and future states. Thus, we have estimated future conditions only for the areas with current $PM_{2.5}$ monitored data (which, as just noted, covers about a third of the nation's counties). For these counties, REMSAD predicts the current level of 37 percent of the population living in areas where fine PM levels are at or above 16 μg/m^3 to increase to 59 percent in 2030.

It is reasonable to anticipate that sensitive populations exposed to similar or higher levels, now and in the 2007 and later time frame, will also be at increased risk relative to the general population of premature mortality associated with exposures to fine PM. In addition, statistically significant relationships have also been observed in U.S. cities between PM levels and increased respiratory symptoms and decreased lung functions in children.

Since EPA's examination in the mid-1990s of the epidemiological and toxicological evidence of the health effects of PM, many new studies have been published that reevaluate or extend the initial research. The Agency is currently reviewing these new studies to stay abreast of the literature and adjust as necessary its assessment of PM's health effects. It is worth noting that within this new body of scientific literature, there are two new studies funded by the Health Effects Institute, a EPA-industry jointly funded group, that have generally confirmed the mid-1990s findings of the Agency about the association of fine particles and premature mortality and various other respiratory and cardiovascular effects. HEI's *National Morbidity, Mortality and Air Pollution Study* (NMMAPS), evaluated associations between air pollutants and mortality in 90 U.S. cities, and also evaluated associations between air pollutants and hospital admissions among the elderly in 14 U.S. cities.[30] In HEI's *Reanalysis of the Harvard Six Cities Study and the American Cancer Society Study of Particulate Air Pollution and Mortality,* data were obtained from the original investigators for two previous studies.[31] [32], The extensive analyses included replication and validation of the previous findings, as well as sensitivity analyses using alternative analytic techniques, including different methods of covariate adjustment, exposure characterization, and exposure-response modeling.[33]

Section 202(a) provides EPA with independent authority to promulgate standards applicable to motor vehicle emissions that "in the Administrator's judgment, cause or contribute to air pollution reasonably anticipated to endanger public health and welfare." The body of health evidence is supportive of our view that PM exposures are a serious public health concern. This concern exists for current exposures as well as exposures that can reasonably be anticipated to occur in the future. The risk is significant from an overall public health perspective because of the large number of individuals in sensitive populations that we expect to be exposed to ambient fine PM in the 2007 and later time frame, as well as the importance of the negative health effects. This information warrants a requirement to reduce emissions from heavy-duty vehicles, to address elevated levels of fine PM. This evidence supports EPA's conclusion that emissions from heavy-duty vehicles that lead to the formation of fine PM in 2007 and later will be contributing to a national air pollution problem that warrants action under section 202(a)(3).

d. Other Welfare Effects Associated with PM

The deposition of airborne particles reduces the aesthetic appeal of buildings, and promotes and accelerates the corrosion of metals, degrades paints, and deteriorates building materials such as concrete and limestone. This materials damage and soiling are related to the ambient levels of airborne particulates, which are emitted by heavy-duty vehicles. Although there was insufficient data to relate materials damage and soiling to specific concentrations, and thereby to allow the Agency to establish a secondary PM standard for these impacts, we believe that the welfare effects are real and that heavy-duty vehicle PM, NO_X, SO_X, and VOC contribute to materials damage and soiling.

e. Conclusions Regarding PM

There is a significant risk that, despite statutory requirements and EPA and State efforts towards attainment and maintenance, some areas of the U.S. will violate the PM_{10} NAAQS in 2007 and thereafter. Heavy-duty vehicles contribute substantially to PM_{10} levels, as shown in Section II.C below.

It is also reasonable to anticipate that concentrations of fine PM, as represented for example by $PM_{2.5}$ concentrations, will also endanger public health and welfare even if all areas attain and maintain the PM_{10} NAAQS. Heavy-duty vehicles contribute to this air pollution problem.

There are also important environmental impacts of PM_{10}, such as regional haze which impairs visibility. Furthermore, while the evidence on soiling and materials damage is limited and the magnitude of the impact of heavy-duty vehicles on these welfare effects is difficult to quantify, these welfare effects support our belief that this action is necessary and appropriate.

Finally, in addition to its contribution to PM inventories, diesel exhaust PM is of special concern because it has been implicated in an increased risk of lung cancer and respiratory disease in human studies, and an increased risk of noncancer health effects as well. The information provided in this section shows that there will be air pollution that warrants regulatory action under section 202(a)(3) of the Act.

4. Diesel Exhaust

Diesel emissions are of concern to the agency beyond their contribution to ambient PM. As discussed in detail in the draft RIA, there have been health studies specific to diesel exhaust emissions which indicate potential hazards to human health that appear to be specific to this emissions source. For chronic exposure, these hazards included respiratory system toxicity and carcinogenicity. Acute exposure also causes transient effects (a wide range of physiological symptoms stemming from irritation and inflammation mostly in the respiratory system) in humans though they are highly variable depending on individual human susceptibility. The chemical

[29] REMSAD modeling for $PM_{2.5}$ annual average concentrations. Total 1996 population in all REMSAD grid cells is 263 million.

[30] Samet JM, Zeger SL, Dominici F, Curriero F, Coursac I, Dockery DW, Schwartz J, Zanobetti A. 2000. The National Morbidity, Mortality and Air Pollution Study: Part II: Morbidity, Mortality and Air Pollution in the United States. Research Report No. 94, Part II. Health Effects Institute, Cambridge MA, June 2000.

[31] Dockery, D.W., Pope, C.A., III, Xu, X., Spengler, J.D., Ware, J.H., Fay, M.E., Ferris, B.G., Speizer, F.E. (1993) An association between air pollution and mortality in six U.S. cities. N. Engl. J. Med. 329:1753–1759.

[32] Pope, C. A., III, Thun, M. J., Namboodiri, M. M., Dockery, D. W., Evans, J. S., Speizer, F. E., Heath, C. W., Jr. (1995) Particulate air pollution as a predictor of mortality in a prospective study of U.S. adults. Am. J. Respir. Crit. Care Med. 151: 669–674.

[33] Krewski D, Burnett RT, Goldbert MS, Hoover K, Siemiatycki J, Jarrett M, Abrahamowicz M, White WH. (2000) Reanalysis of the Harvard Six Cities Study and the American Cancer Society Study of Particulate Air Pollution and Mortality. Special Report to the Health Effects Institute, Cambridge MA, July 2000.

EXHIBIT J

composition of diesel exhaust includes several hazardous air pollutants, or air toxics. In our Mobile Source Air Toxic Rulemaking under section 202(l) of the Act discussed above, EPA determined that diesel particulate matter and diesel exhaust organic gases be identified as a Mobile Source Air Toxic (MSAT). The purpose of the MSAT list is to provide a screening tool that identifies compounds emitted from motor vehicles or their fuels for which further evaluation of emissions controls is appropriate. As discussed in chapter 3 on engine technology, the particulate matter standard finalized today reflects the greatest degree of emissions reductions achievable under section 202(l) for on-highway heavy-duty vehicle PM emissions.

a. Potential Cancer Effects of Diesel Exhaust

The EPA has concluded that diesel exhaust is likely to be carcinogenic to humans by inhalation at occupational and environmental levels of exposure.[34] The draft Health Assessment Document for Diesel Exhaust (draft Assessment), was reviewed in public session by the Clean Air Scientific Advisory Committee (CASAC) on October 12–13, 2000.[35] The CASAC found that the Agency's conclusion that diesel exhaust is likely to be carcinogenic to humans is scientifically sound. CASAC concurred with the draft Assessment's findings with the proviso that EPA provide modifications and clarifications on certain topics. The Agency expects to produce the finalized Assessment in early 2001. Information presented here is consistent with that to be provided in the final Assessment.

In its review of the published literature, EPA found that about 30 individual epidemiologic studies show increased lung cancer risk associated with diesel emissions. In the draft Assessment EPA evaluated 22 studies that were most relevant for risk assessment, 16 of which reported significant increased lung cancer risks, ranging from 20 to 167 percent, associated with diesel exhaust exposure. Published analytical results of pooling many of the 30 studies showed that on average, the risks were increased by 33 to 47 percent. Questions remain about the influence of other factors (e.g., effect of smoking, other particulate sources), the quality of the individual epidemiologic studies, exposure levels, and consequently the precise magnitude of the increased risk of lung cancer. From a weight of evidence perspective, EPA concludes that the epidemiologic evidence, as well as supporting data from certain animal and mode of action studies, support the Agency's conclusion that exposure to diesel exhaust is likely to pose a human lung cancer hazard to occupationally exposed individuals as well as to the general public exposed to typically lower environmental levels of diesel exhaust.

Risk assessments in the peer-reviewed literature have attempted to assess the lifetime risk of lung cancer in workers occupationally exposed to diesel exhaust. These estimates suggest that lung cancer risk may range from 10^{-4} to 10^{-2}.[36 37 38] The Agency recognizes the significant uncertainties in these studies, and has not used these estimates to assess the possible cancer unit risk associated with ambient exposure to diesel exhaust.

While available evidence supports EPA's conclusion that diesel exhaust is likely to be a human lung carcinogen, and thus is likely to pose a cancer hazard to humans, EPA has concluded that the available data are not sufficient to develop a confident estimate of cancer unit risk. The absence of a cancer unit risk for diesel exhaust limits our ability to quantify, with confidence, the potential impact of the hazard (magnitude of risk) on exposed populations. In the draft Assessment, EPA acknowledged this limitation and provided a discussion of the possible environmental cancer risk consistent with the majority of the occupational epidemiological findings of increased lung cancer risk and the exposure differences between the occupational and environmental settings.[39] The Agency concluded in developing its perspective on risk that there is a reasonable potential that environmental lifetime cancer risks (''environmental risk range'') from diesel exhaust may exceed 10^{-5} and could be as high as 10^{-3}.[40]

The environmental risk estimates included in the Agency's risk perspective are meant only to gauge the possible magnitude of risk to provide a means to understand the potential significance of the lung cancer hazard. The estimates are not to be construed as cancer unit risk estimates and are not suitable for use in analyses which would estimate possible lung cancer cases in exposed populations.

EPA recognizes that, as in all such risk assessments, there are uncertainties in this assessment of the environmental risk range including limitations in exposure data, uncertainty with respect to the most accurate characterization of the risk increases observed in the epidemiological studies, chemical changes in diesel exhaust over time, and extrapolation of the risk from occupational to ambient environmental exposures. As with any such risk assessment for a carcinogen, despite EPA's thorough examination of the available epidemiologic evidence and exposure information, at this time EPA can not rule out the possibility that the lower end of the risk range includes zero.[41] However, it is the Agency's best scientific judgement that the assumptions and other elements of this analysis are reasonable and appropriate for identifying the risk potential based on the scientific information currently available.

The Agency believes that the risk estimation techniques that were used in the draft Assessment to gauge the potential for and possible magnitude of risk are reasonable and the CASAC

[34] U.S. EPA (2000) Health Assessment Document for Diesel Exhaust: SAB Review Draft. EPA/600/8–90/057E Office of Research and Development, Washington, D.C. The document is available electronically at www.epa.gov/ncea/dieslexh.htm.

[35] EPA (2000) Review of EPA's Health Assessment Document for Diesel Exhaust (EPA 600/8–90/057E). Review by the Clean Air Scientific Advisory Committee (CASAC) December 2000. EPA–SAB–CASAC–01–003.

[36] California Environmental Protection Agency, Office of Health Hazard Assessment (CAL–EPA, OEHHA) (1998) Proposed Identification of Diesel Exhaust as a Toxic Air Contaminant. Appendix III Part B Health Risk Assessment for Diesel Exhaust. April 22, 1998.

[37] Harris, J.E. (1983) Diesel emissions and Lung Cancer. Risk Anal. 3:83–100.

[38] Stayner, L.S., Dankovic, D., Smith, R., Steenland, K. (1998) Predicted Lung Cancer Risk Among Miners Exposed to Diesel Exhaust Particles. Am. J. of Indus. Medicine 34:207–219.

[39] See Chapter 8.4 and 9.5.2 of the U.S. EPA (2000) Health Assessment Document for Diesel Emissions: SAB Review Draft. EPA/600/8–90/057E Office of Research and Development, Washington, D.C. The document is available electronically at www.epa.gov/ncea/dieselexh.htm.

[40] As used in this rule, environmental risk is defined as the risk (i.e. a mathematical probability) that lung cancer would be observed in the population after a lifetime exposure to diesel exhaust. Exposure levels may be occupational lifetime or environmental lifetime exposures. An environmental risk in the magnitude of 10^{-5} translates as the probability of lung cancer being evidenced in one person in a population of one hundred thousand having a lifetime exposure.

[41] EPA's scientific judgment (which CASAC has supported) is that diesel exhaust is likely to be carcinogenic to humans. Notably, similar scientific judgements about the carcinogenicity of diesel exhaust have been recently made by the National Toxicology Program of the Department of Health and Human Services, NIOSH, WHO, and OEHA of the State of California. In the risk perspective discussed above, EPA recognizes the possibility that the lower end of the environmental risk range includes zero. The risks could be zero because (1) some individuals within the population may have a high tolerance level to exposure from diesel exhaust and therefore are not susceptible to the cancer risks from environmental exposure and (2) although EPA has not seen evidence of this, there could be a threshold of exposure below which there is no cancer risk.

EXHIBIT J

panel has concurred with the Assessment's discussion of the possible environmental risk range with an understanding that some clarifications and caveats would be added to the final version of the Assessment. Details of the technical approach used in estimating the possible range of environmental risks and uncertainties are provided in the RIA.

In the draft Assessment, the Agency also provided a discussion of the potential overlap and/or relatively small difference between some occupational settings where increased lung cancer risk is reported and ambient environmental exposures. The potential for small exposure differences underscores the concern that some degree of occupational risk may also be present in the environmental setting and that extrapolation of occupational risk to ambient environmental exposure levels should be more confidently judged to be appropriate. The relevant exposure information is presented in the RIA.

In the absence of having a unit cancer risk to assess environmental risk, EPA has considered the relevant epidemiological studies and principles for their assessment, the relative risk from occupational exposure as assessed by others, and relative exposure differences between occupational and ambient environmental levels of diesel exhaust exposure.

While uncertainty exists in estimating the possible magnitude of the environmental risk range, the likely hazard to humans together with the potential for significant environmental risks leads the Agency to believe that diesel exhaust emissions should be reduced in order to protect the public's health. We believe that this is a prudent measure in light of:

- The designation that diesel exhaust is likely to be carcinogenic to humans,
- The exposure of the entire population to various levels of diesel exhaust,
- The consistent observation of significantly increased lung cancer risk in workers exposed to diesel exhaust, and
- The potential overlap and/or relatively small difference between some occupational settings where increased lung cancer risk is reported and ambient exposures.

In the late 1980s, the International Agency for Research on Cancer (IARC) determined that diesel exhaust is ''probably carcinogenic to humans'' and the National Institute for Occupational Safety and Health classified diesel exhaust a ''potential occupational carcinogen.''[42] [43] Based on IARC findings, the State of California identified diesel exhaust in 1990 as a chemical known to the State to cause cancer. In 1996, the International Programme on Chemical Safety of the World Health Organization listed diesel exhaust as a ''probable'' human carcinogen.[44] In 1998, the California Office of Environmental Health Hazard Assessment (OEHHA, California EPA) identified diesel PM as a toxic air contaminant due to the noncancer and cancer hazard and because of the potential magnitude of the cancer risk.[45] Most recently, the U.S. Department of Health and Human Services National Toxicology Program designated diesel exhaust particles as ''reasonably anticipated to be a human carcinogen'' in its Ninth Report on Carcinogens.[46] The concern for a carcinogenicity hazard resulting from diesel exhaust exposures is longstanding and widespread.

b. Noncancer Effects of Diesel Exhaust

The acute and chronic exposure-related noncancer effects of diesel exhaust emissions are also of concern to the Agency. Acute exposure to diesel exhaust can result in physiologic symptoms consistent with irritation and inflammation, and evidence of immunological effects including increased reaction to allergens and some symptoms associated with asthma. The acute effects data, however, lack sufficient detail to permit the calculation of protective levels for human exposure.

For chronic diesel exhaust exposure, EPA is completing the development of an inhalation reference concentration (RfC). The RfC is an estimate of the continuous human inhalation exposure (including sensitive subgroups) that is likely to be without an appreciable risk of deleterious noncancer effects during a lifetime. While the limited amount of human data are suggestive of respiratory distress, animal test data are quite definitive in providing a basis to anticipate a hazard to the human lung based on the irritant and inflammatory reactions in test animals. Thus, EPA believes that chronic diesel exhaust exposure, at sufficient exposure levels, increases the hazard and risk of an adverse health effect. Based on CASAC advice regarding the use of the animal data to derive the RfC, the Agency will provide in the final Assessment in 2001 an RfC based on diesel exhaust effects in test animals of approximately 5 $\mu g/m^3$.

In addition, it is also instructive to recognize that diesel exhaust particulate matter is part of ambient fine PM. A qualitative comparison of adverse effects of exposure to ambient fine PM and diesel exhaust particulate matter shows that the respiratory system is adversely affected in both cases, though a wider spectrum of adverse effects has been identified for ambient fine PM. Relative to the diesel PM database, there is a wealth of human data for fine PM noncancer effects. Since diesel exhaust PM is a component of ambient fine PM, the fine PM health effects data base can be informative. The final Assessment will discuss the fine PM health effects data and its relation to evaluating health effects associated with diesel exhaust.

5. Other Criteria Pollutants

The standards being finalized today will help reduce levels of three other pollutants for which NAAQS have been established: carbon monoxide (CO), nitrogen dioxide (NO_2), and sulfur dioxide (SO_2). As of July, 2000, every area in the United States has been designated to be in attainment with the NO_2 NAAQS. There were 28 areas designated as nonattainment with the SO_2 standard, and 17 areas designated CO nonattainment areas.

A health threat of carbon monoxide at outdoor levels occurs for those who suffer from cardiovascular disease, such as angina petoris, where it can exacerbate the effects. Studies also show that outdoor levels can lower peak performance from individuals that are exercising and lower exercise tolerance of sensitive individuals. EPA believes that epidemiological evidence suggests that there is a risk of premature mortality and lowered birth weight from CO exposure.[47] The Carbon Monoxide Criteria Document was finalized in

[42] National Institute for Occupational Safety and Health (NIOSH) (1988) Carcinogenic effects of exposure to diesel exhaust. NIOSH Current Intelligence Bulletin 50. DHHS, Publication No. 88–116. Centers for Disease Control, Atlanta, GA.

[43] International Agency for Research on Cancer (1989) Diesel and gasoline engine exhausts and some nitroarenes, Vol. 46. Monographs on the evaluation of carcinogenic risks to humans. World Heath Organization, International Agency for Research on Cancer, Lyon, France.

[44] World Health Organization (1996) Diesel fuel and exhaust emissions: International program on chemical safety. World Health Organization, Geneva, Switzerland.

[45] Office of Environmental Health Hazard Assessment (1998) Health risk assessment for diesel exhaust, April 1998. California Environmental Protection Agency, Sacramento, CA.

[46] U.S. Department of Health and Human Services (2000) Ninth report on carcinogens. National Toxicology Program, Research Triangle Park, NC. ehis.niehs.nih.gov/roc/toc9.html.

[47] U.S. Environmental Protection Agency, Air Quality Criteria for Carbon Monoxide, June 2000.

EXHIBIT J

August 2000 and made available to the public at that time.

6. Other Air Toxics

In addition to NO_X and particulates, heavy-duty vehicle emissions contain several other substances that are known or suspected human or animal carcinogens, or have serious noncancer health effects. These include benzene,1,3-butadiene, formaldehyde, acetaldehyde, acrolein, and dioxin. For some of these pollutants, heavy-duty engine emissions are believed to account for a significant proportion of total nation-wide emissions. Although these emissions will decrease in the short term, they are expected to increase between 2010 and 2020 without the emission limits, as the number of miles traveled by heavy-duty trucks increases. In the RIA, we present current and projected exposures to benzene, 1,3-butadiene, formaldehyde, and acetaldehyde from all on-highway motor vehicles.

By reducing hydrocarbon and other organic emissions, both in gas phase and bound to particles, the emission control program in today's action will also reduce the direct emissions of air toxics from HDVs. Today's action will reduce exposure to hydrocarbon and other organic emissions and therefore help reduce the impact of HDV emissions on cancer and noncancer health effects.

a. Benzene

Highway mobile sources account for 42 percent of nationwide emissions of benzene and HDVs account for 7 percent of all highway vehicle benzene emissions.[48] The EPA has recently reconfirmed that benzene is a known human carcinogen by all routes of exposure (including leukemia at high, prolonged air exposures), and is associated with additional health effects including genetic changes in humans and animals and increased proliferation of bone marrow cells in mice.[49] [50] [51] EPA believes that the data indicate a causal relationship between benzene exposure and acute lymphocytic leukemia and suggest a relationship between benzene exposure and chronic non-lymphocytic leukemia and chronic lymphocytic leukemia. Respiration is the major source of human exposure and at least half of this exposure is attributable to gasoline vapors and automotive emissions. A number of adverse noncancer health effects including blood, disorders, such as preleukemia and aplastic anemia, have also been associated with low-dose, long-term exposure to benzene.

b. 1,3-Butadiene

Highway mobile sources account for 42 percent of the annual emissions of 1,3-butadiene and HDVs account for 15 percent of the highway vehicle portion. Today's program will play an important role in reducing in the mobile contribution of 1,3-butadiene. Reproductive and/or developmental effects have been observed in mice and rats following inhalation exposure to 1,3-butadiene.[52] No information is available on developmental/reproductive effects in humans following exposure to 1,3-butadiene. In the EPA1998 draft Health Risk Assessment of 1,3-Butadiene, that was reviewed by the SAB, EPA proposed that 1,3-butadiene is a known human carcinogen based on human epidemiologic, laboratory animal data, and supporting data such as the genotoxicity of 1,3-butadiene metabolites.[53] The Environmental Health Committee of EPA's Scientific Advisory Board (SAB), reviewed the draft document in August 1998 and recommended that 1,3-butadiene be classified as a probable human carcinogen, stating that designation of 1,3-butadiene as a known human carcinogen should be based on observational studies in humans, without regard to mechanistic or other information.[54] In applying the 1996 proposed Guidelines for Carcinogen Risk Assessment, the Agency relies on both observational studies in humans as well as experimental evidence demonstrating causality and therefore the designation of 1,3-butadiene as a known human carcinogen remains applicable.[55] The Agency has revised the draft Health Risk Assessment of 1,3-Butadiene based on the SAB and public comments. The draft Health Risk Assessment of 1,3-Butadiene will undergo the Agency consensus review, during which time additional changes may be made prior to its public release and placement on the Integrated Risk Information System (IRIS).

c. Formaldehyde

Highway mobile sources contribute 24 percent of the national emissions of formaldehyde, and HDVs account for 36 percent of the highway portion. EPA has classified formaldehyde as a probable human carcinogen based on evidence in humans and in rats, mice, hamsters, and monkeys.[56] Epidemiological studies in occupationally exposed workers suggest that long-term inhalation of formaldehyde may be associated with tumors of the nasopharyngeal cavity (generally the area at the back of the mouth near the nose), nasal cavity, and sinus. Formaldehyde exposure also causes a range of noncancer health effects, including irritation of the eyes (tearing of the eyes and increased blinking) and mucous membranes. Sensitive individuals may experience these adverse effects at lower concentrations than the general population and in persons with bronchial asthma, the upper respiratory irritation caused by formaldehyde can precipitate an acute asthmatic attack. The agency is currently conducting a reassessment of risk from inhalation exposure to formaldehyde.

d. Acetaldehyde

Highway mobile sources contribute 29 percent of the national acetaldehyde emissions and HDVs are responsible for approximately 33 percent of these highway mobile source emissions. Acetaldehyde is classified as a probable human carcinogen and is considered moderately toxic by the inhalation, oral, and intravenous routes. The primary acute effect of exposure to acetaldehyde vapors is irritation of the eyes, skin, and respiratory tract. At high concentrations, irritation and pulmonary effects can occur, which could facilitate the uptake of other contaminants. The agency is currently conducting a reassessment of

[48] U.S. EPA (2000) 1996 National Toxics Inventory. http://www.epa.gov/ttn/uatw/nata. Inventory values for 1,3 butadiene, formaldehyde, acetaldehyde, and acrolein discussed below also come from this source.

[49] International Agency for Research on Cancer, IARC monographs on the evaluation of carcinogenic risk of chemicals to humans, Volume 29, Some industrial chemicals and dyestuffs, International Agency for Research on Cancer, World Health Organization, Lyon, France, p. 345–389, 1982.

[50] Irons, R.D., W.S. Stillman, D.B. Colagiovanni, and V.A. Henry, Synergistic action of the benzene metabolite hydroquinone on myelopoietic stimulating activity of granulocyte/macrophage colony-stimulating factor in vitro, Proc. Natl. Acad. Sci. 89:3691–3695, 1992.

[51] Environmental Protection Agency, Carcinogenic Effects of Benzene: An Update, National Center for Environmental Assessment, Washington, DC. 1998.

[52] Environmental Protection Agency. Draft Health Risk Assessment of 1,3-Butadiene, National Center for Environmental Assessment, Office of Research and Development, U.S. EPA, EPA/600/P–98/001A, February 1998.

[53] An SAB Report: Review of the Health Risk Assessment of 1,3-Butadiene. EPA-SAB-EHC–98, August, 1998.

[54] Scientific Advisory Board. 1998. An SAB Report: Review of the Health Risk Assessment of 1,3-Butadiene. EPA-SAB-EHC–98, August, 1998.

[55] [55]: EPA 1996. Proposed guidelines for carcinogen risk assessment. **Federal Register** 61(79):17960–18011.

[56] Environmental Protection Agency, Assessment of Health Risks to Garment Workers and Certain Home Residents from Exposure to Formaldehyde, Office of Pesticides and Toxic Substances, April 1987.

EXHIBIT J

risk from inhalation exposure to acetaldehyde.

e. Acrolein

Highway mobile sources contribute 16 percent of the national acrolein emissions and HDVs are responsible for approximately 39 percent of these highway mobile source emissions. Acrolein is extremely toxic to humans when inhaled, with acute exposure resulting in upper respiratory tract irritation and congestion. The Agency has developed a reference concentration for inhalation (RfC) of acrolein of 0.02 micrograms/m^3.[57] Although no information is available on its carcinogenic effects in humans, based on laboratory animal data, EPA considers acrolein a possible human carcinogen.

f. Dioxins

Recent studies have confirmed that dioxins are formed by and emitted from heavy-duty diesel trucks and are estimated to account for 1.2 percent of total dioxin emissions in 1995. In the environment, the pathway of immediate concern is the food pathway (*e.g.*, human ingestion of certain foods, *e.g.* meat and dairy products contaminated by dioxin) which may be affected by deposition of dioxin from the atmosphere. EPA classified dioxins as probable human carcinogens in 1985. Recently EPA has proposed, and the Scientific Advisory Board has concurred, to classify one dioxin compound, 2,3,7,8-tetrachlorodibenzo-p-dioxin as a human carcinogen and the complex mixtures of dioxin-like compounds as likely to be carcinogenic to humans using the draft 1996 carcinogen risk assessment guidelines.[58] Using the 1986 cancer risk assessment guidelines, the hazard characterization for 2,3,7,8-tetrachlorodibenzo-p-dioxin is ''known'' human carcinogen and the hazard characterization for complex mixtures of dioxin-like compounds is ''probable'' human carcinogens. Acute and chronic noncancer effects have also been reported for dioxin.

7. Other Welfare and Environmental Effects

Some commenters challenged the Agency's use of adverse welfare and environmental effects associated with emissions from heavy-duty vehicles as a partial basis for this rulemaking. Other commenters went to great lengths to support the Agency's inclusion of these welfare and environmental effects. Additional information has been added since the proposal in order to update and clarify the available information on welfare and environmental impacts of heavy-duty vehicle emissions. The following section presents information on four categories of public welfare and environmental impacts related to heavy-duty vehicle emissions: acid deposition, eutrophication of water bodies, POM deposition, and impairment of visibility.

a. Acid Deposition

Acid deposition, or acid rain as it is commonly known, occurs when SO_2 and NO_X react in the atmosphere with water, oxygen, and oxidants to form various acidic compounds that later fall to earth in the form of precipitation or dry deposition of acidic particles.[59] It contributes to damage of trees at high elevations and in extreme cases may cause lakes and streams to become so acidic that they cannot support aquatic life. In addition, acid deposition accelerates the decay of building materials and paints, including irreplaceable buildings, statues, and sculptures that are part of our nation's cultural heritage. To reduce damage to automotive paint caused by acid rain and acidic dry deposition, some manufacturers use acid-resistant paints, at an average cost of $5 per vehicle—a total of $61 million per year if applied to all new cars and trucks sold in the U.S.

Acid deposition primarily affects bodies of water that rest atop soil with a limited ability to neutralize acidic compounds. The National Surface Water Survey (NSWS) investigated the effects of acidic deposition in over 1,000 lakes larger than 10 acres and in thousands of miles of streams. It found that acid deposition was the primary cause of acidity in 75 percent of the acidic lakes and about 50 percent of the acidic streams, and that the areas most sensitive to acid rain were the Adirondacks, the mid-Appalachian highlands, the upper Midwest and the high elevation West. The NSWS found that approximately 580 streams in the Mid-Atlantic Coastal Plain are acidic primarily due to acidic deposition. Hundreds of the lakes in the Adirondacks surveyed in the NSWS have acidity levels incompatible with the survival of sensitive fish species. Many of the over 1,350 acidic streams in the Mid-Atlantic Highlands (mid-Appalachia) region have already experienced trout losses due to increased stream acidity. Emissions from U.S. sources contribute to acidic deposition in eastern Canada, where the Canadian government has estimated that 14,000 lakes are acidic. Acid deposition also has been implicated in contributing to degradation of high-elevation spruce forests that populate the ridges of the Appalachian Mountains from Maine to Georgia. This area includes national parks such as the Shenandoah and Great Smoky Mountain National Parks.

A recent study of emissions trends and acidity of waterbodies in the Eastern United States by the General Accounting Office (GAO) found that sulfates declined in 92 percent of a representative sample of lakes from 1992 to 1999, and nitrate levels increased in 48 percent of the lakes sampled.[60] The decrease in sulfates is consistent with emissions trends, but the increase in nitrates is inconsistent with the stable levels of nitrogen emissions and deposition. The study suggests that the vegetation and land surrounding these lakes have lost some of their previous capacity to use nitrogen, thus allowing more of the nitrogen to flow into the lakes and increase their acidity. Recovery of acidified lakes is expected to take a number of years, even where soil and vegetation have not been ''nitrogen saturated,'' as EPA called the phenomenon in a 1995 study.[61] This situation places a premium on reductions of SO_X and especially NO_X from all sources, including HDVs, in order to reduce the extent and severity of nitrogen saturation and acidification of lakes in the Adirondacks and throughout the United States.

The SO_X and NO_X reductions from today's action will help reduce acid rain and acid deposition, thereby helping to reduce acidity levels in lakes and streams throughout the country and help accelerate the recovery of acidified lakes and streams and the revival of ecosystems adversely affected by acid deposition. Reduced acid deposition levels will also help reduce stress on forests, thereby accelerating reforestation efforts and improving timber production. Deterioration of our

[57] U.S. EPA (1993) Environmental Protection Agency, Integrated Risk Information System (IRIS), National Center for Environmental Assessment, Cincinnati, OH.

[58] U.S. EPA (2000) Exposure and Human Health Reassessment of 2,3,7,8-Tetrachlorodibenzo-p-Dioxin (TCDD) and Related Compounds. Part III: Integrated Summary and Risk Characterization for 2,3,7,8-Tetrachlorodibenzo-p-Dioxin (TCDD) and Related Compounds. External Review Draft. EPA/600/P–00/001Ag.

[59] Much of the information in this subsection was excerpted from the EPA document, Human Health Benefits from Sulfate Reduction, written under Title IV of the 1990 Clean Air Act Amendments, U.S. EPA, Office of Air and Radiation, Acid Rain Division, Washington, DC 20460, November 1995.

[60] Acid Rain: Emissions Trends and Effects in the Eastern United States, US General Accounting Office, March, 2000 (GOA/RCED–00–47).

[61] Acid Deposition Standard Feasibility Study: Report to Congress, EPA 430R–95–001a, October, 1995.

EXHIBIT J

historic buildings and monuments, and of buildings, vehicles, and other structures exposed to acid rain and dry acid deposition also will be reduced, and the costs borne to prevent acid-related damage may also decline. While the reduction in sulfur and nitrogen acid deposition will be roughly proportional to the reduction in SO_X and NO_X emissions, respectively, the precise impact of today's action will differ across different areas.

b. Eutrophication and Nitrification

Eutrophication is the accelerated production of organic matter, particularly algae, in a water body. This increased growth can cause numerous adverse ecological effects and economic impacts, including nuisance algal blooms, dieback of underwater plants due to reduced light penetration, and toxic plankton blooms. Algal and plankton blooms can also reduce the level of dissolved oxygen, which can also adversely affect fish and shellfish populations.

In 1999, NOAA published the results of a five year national assessment of the severity and extent of estuarine eutrophication. An estuary is defined as the inland arm of the sea that meets the mouth of a river. The 138 estuaries characterized in the study represent more than 90 percent of total estuarine water surface area and the total number of US estuaries. The study found that estuaries with moderate to high eutrophication conditions represented 65 percent of the estuarine surface area. Eutrophication is of particular concern in coastal areas with poor or stratified circulation patterns, such as the Chesapeake Bay, Long Island Sound, or the Gulf of Mexico. In such areas, the ''overproduced'' algae tends to sink to the bottom and decay, using all or most of the available oxygen and thereby reducing or eliminating populations of bottom-feeder fish and shellfish, distorting the normal population balance between different aquatic organisms, and in extreme cases causing dramatic fish kills.

Severe and persistent eutrophication often directly impacts human activities. For example, losses in the nation's fishery resources may be directly caused by fish kills associated with low dissolved oxygen and toxic blooms. Declines in tourism occur when low dissolved oxygen causes noxious smalls and floating mats of algal blooms create unfavorable aesthetic conditions. Risks to human health increase when the toxins from algal blooms accumulate in edible fish and shellfish, and when toxins become airborne, causing respiratory problems due to inhalation. According to the NOAA report, more than half of the nation's estuaries have moderate to high expressions of at least one of these symptoms—an indication that eutrophication is well developed in more than half of U.S. estuaries.

In recent decades, human activities have greatly accelerated nutrient inputs, such as nitrogen and phosphorous, causing excessive growth of algae and leading to degraded water quality and associated impairments of freshwater and estuarine resources for human uses.[62] Since 1970, eutrophic conditions worsened in 48 estuaries and improved in 14. In 26 systems, there was no trend in overall eutrophication conditions since 1970.[63] On the New England coast, for example, the number of red and brown tides and shellfish problems from nuisance and toxic plankton blooms have increased over the past two decades, a development thought to be linked to increased nitrogen loadings in coastal waters. Long-term monitoring in the United States, Europe, and other developed regions of the world shows a substantial rise of nitrogen levels in surface waters, which are highly correlated with human-generated inputs of nitrogen to their watersheds.

On a national basis, the most frequently recommended control strategies by experts surveyed by National Oceanic and Atmospheric Administration (NOAA) between 1992–1997 were agriculture, wastewater treatment, urban runoff, and atmospheric deposition.[64] In its Third Report to Congress on the Great Waters, EPA reported that atmospheric deposition contributes from 2 to 38 percent of the nitrogen load to certain coastal waters.[65] A review of peer reviewed literature in 1995 on the subject of air deposition suggests a typical contribution of 20 percent or higher.[66] Human-caused nitrogen loading to the Long Island Sound from the atmosphere was estimated at 14 percent by a collaboration of federal and state air and water agencies in 1997.[67] The National Exposure Research Laboratory, US EPA, estimated based on prior studies that 20 to 35 percent of the nitrogen loading to the Chesapeake Bay is attributable to atmospheric deposition.[68] The mobile source portion of atmospheric NO_X contribution to the Chesapeake Bay was modeled at about 30 percent of total air deposition.[69]

Deposition of nitrogen from heavy-duty vehicles contributes to elevated nitrogen levels in waterbodies. In the Chesapeake Bay region, modeling shows that mobile source deposition occurs in relatively close proximity to highways, such as the 1–95 corridor which covers part of the Bay surface. The new standards for heavy-duty vehicles will reduce total NO_X emissions by 2.6 million tons in 2030. The NO_X reductions will reduce the airborne nitrogen deposition that contributes to eutrophication of watersheds, particularly in aquatic systems where atmospheric deposition of nitrogen represents a significant portion of total nitrogen loadings.

c. Polycyclic Organic Matter Deposition

EPA's Great Waters Program has identified 15 pollutants whose deposition to water bodies has contributed to the overall contamination loadings to the these Great Waters.[70] One of these 15 pollutants, a group known as polycyclic organic matter (POM), are compounds that are mainly adhered to the particles emitted by mobile sources and later fall to earth in the form of precipitation or dry deposition of particles. The mobile source contribution of the 7 most toxic POM is at least 62 tons/year and represents only those POM that adhere to mobile source particulate emissions.[71] The majority of these emissions are produced by diesel engines.

[62] Deposition of Air Pollutants to the Great Waters, Third Report to Congress, June, 2000.

[63] Deposition of Air Pollutants to the Great Waters, Third Report to Congress, June, 2000. Great Waters are defined as the Great Lakes, the Chesapeake Bay, Lake Champlain, and coastal waters. The first report to Congress was delivered in May, 1994; the second report to Congress in June, 1997.

[64] Bricker, Suzanne B., et al., National Estuarine Eutrophication Assessment, Effects of Nutrient Enrichment in the Nation's Estuaries, National Ocean Service, National Oceanic and Atmospheric Administration, September, 1999.

[65] Deposition of Air Pollutants to the Great Waters, Third Report to Congress, June, 2000.

[66] Valigura, Richard, et al., Airsheds and Watersheds II: A Shared Resources Workshop, Air Subcommittee of the Chesapeake Bay Program, March, 1997.

[67] The Impact of Atmospheric Nitrogen Deposition on Long Island Sound, The Long Island Sound Study, September, 1997.

[68] Dennis, Robin L., Using the Regional Acid Deposition Model to Determine the Nitrogen Deposition Airshed of the Chesapeake Bay Watershed, SETAC Technical Publications Series, 1997.

[69] Dennis, Robin L., Using the Regional Acid Deposition Model to Determine the Nitrogen Deposition Airshed of the Chesapeake Bay Watershed, SETAC Technical Publications Series, 1997.

[70] Deposition of Air Pollutants to the Great Waters—Third Report to Congress, June, 2000, Office of Air Quality Planning and Standards Deposition of Air Pollutants to the Great Waters—Second Report to Congress, Office of Air Quality Planning and Standards, June 1997, EPA–453/R–97–011.

[71] The 1996 National Toxics Inventory, Office of Air Quality Planning and Standards, October 1999.

EXHIBIT J

POM is generally defined as a large class of chemicals consisting of organic compounds having multiple benzene rings and a boiling point greater than 100 degrees C. Polycyclic aromatic hydrocarbons are a chemical class that is a subset of POM. POM are naturally occurring substances that are byproducts of the incomplete combustion of fossil fuels and plant and animal biomass (e.g., forest fires). Also, they occur as byproducts from steel and coke productions and waste incineration. Evidence for potential human health effects associated with POM comes from studies in animals (fish, amphibians, rats) and in human cells culture assays. Reproductive, developmental, immunological, and endocrine (hormone) effects have been documented in these systems. Many of the compounds included in the class of compounds known as POM are classified by EPA as probable human carcinogens based on animal data.

Evidence for potential human health effects associated with POM comes from studies in animals (fish, amphibians, rats) and in human cells culture assays. Reproductive, developmental, immunological, and endocrine (hormone) effects have been documented in these systems. Many of the compounds included in the class of compounds known as POM are classified by EPA as probable human carcinogens based on animal data.

The particulate reductions from today's action will help reduce not only the particulate emissions from highway diesel engines but also the deposition of the POM adhering to the particles, thereby helping to reduce health effects of POM in lakes and streams, accelerate the recovery of affected lakes and streams, and revive the ecosystems adversely affected.

d. Visibility and Regional Haze

Visibility impairment, also called regional haze, is a complex problem caused by a variety of sources, both natural and anthropogenic (e.g., motor vehicles). Regional haze masks objects on the horizon and reduces the contrast of nearby objects. The formation, extent, and intensity of regional haze are functions of meteorological and chemical processes, which sometimes cause fine particle loadings to remain suspended in the atmosphere for several days and to be transported hundreds of kilometers from their sources (NRC, 1993).

Visibility has been defined as the degree to which the atmosphere is transparent to visible light (NRC, 1993). Visibility impairment is caused by the scattering and absorption of light by particles and gases in the atmosphere. Fine particles (0.1 to 2.5 microns in diameter) are more effective per unit mass concentration at impairing visibility than either larger or smaller particles (NAPAP, 1991). Most of the diesel particle mass emitted by diesel engines falls within this fine particle size range. Light absorption is often caused by elemental carbon, a product of incomplete combustion from activities such as burning diesel fuel or wood. These particles cause light to be scattered or absorbed, thereby reducing visibility.

Heavy-duty vehicles contribute a significant portion of the emissions of direct PM, NO_X, and SO_X that result in ambient PM that contributes to regional haze and impaired visibility. The Grand Canyon Visibility Transport Commission's report found that heavy-duty diesel vehicles contribute 41 percent of fine elemental carbon or soot, 20 percent of NO_X, 7 percent of fine organic carbon, and 6 percent of SO_X. The report also found that reducing total mobile source emissions is an essential part of any program to protect visibility in the Western U.S. The Commission identified mobile source pollutants of concern as VOC, NO_X, and elemental and organic carbon. The Western Governors Association, in later commenting on the Regional Haze Rule and on protecting the 16 Class I areas on the Colorado Plateau, stated that the federal government, and particularly EPA, must do its part in regulating emissions from mobile sources that contribute to regional haze in these areas. As described more fully later in this section, today's action will result in large reductions in these pollutants. These reductions are expected to provide an important step towards improving visibility across the nation. Emissions reductions being achieved to attain the 1-hour ozone and PM_{10} NAAQS will assist in visibility improvements. Moreover, the timing of the reductions from the standards fits very well with the goals of the regional haze program. We will work with the regional planning bodies to make sure they have the information to take account of the reductions from this final rule in their planning efforts.

The Clean Air Act contains provisions designed to protect national parks and wilderness areas from visibility impairment. In 1999, EPA promulgated a rule that will require States to develop plans to dramatically improve visibility in national parks. Although it is difficult to determine natural visibility levels, we believe that average visual range in many Class I areas in the United States is significantly less (about 50–66 percent of natural visual range in the West, about 20 percent of natural visual range in the East) than the visual range that will exist without anthropogenic air pollution. The final Regional Haze Rule establishes a 60-year time period for planning purposes, with several near term regulatory requirements, and is applicable to all 50 states. One of the obligations is for States to representative conduct visibility monitoring in mandatory Class I Federal areas and determine baseline conditions using data for year 2000 to 2004. Reductions of particles, NO_X, sulfur, and VOCs from this rulemaking will have a significant impact on moving all states towards achieving long-term visibility goals, as outlined in the 1999 Regional Haze Rule.

C. Contribution from Heavy-Duty Vehicles

Nationwide, heavy-duty vehicles are projected to contribute about 15 percent of the total NO_X inventory, and 28 percent of the mobile source inventory in 2007. Heavy-duty NO_X emissions also contribute to fine particulate concentrations in ambient air due to the transformation in the atmosphere to nitrates. The NO_X reductions resulting from today's standards will therefore have a considerable impact on the national NO_X inventory. All highway vehicles account for 34 percent and heavy-duty highway vehicles account for 20 percent of the mobile source portion of national PM_{10} emissions in 2007. The heavy-duty portion of the inventory is often greater in the cities, and the reductions in this rulemaking will have a relatively greater benefit in those areas.

1. NO_X Emissions

Heavy-duty vehicles are important contributors to the national inventories of NO_X emissions. Without NO_X reductions from this rule, HDVs are expected to contribute approximately 18 percent of annual NO_X emissions in 1996. The HDV contribution is predicted to fall to 15 percent in 2007 and 14 percent in 2020 due to reductions from the 2004 heavy-duty rulemaking, and then rise again to 16 percent of total NO_X inventory by 2030 (Table II.C–1). Annual NO_X reductions from this rule are expected to total 2.6 million tons in 2030.

EXHIBIT J

TABLE II.C–1—NO_X EMISSIONS FROM HDVS WITH AND WITHOUT REDUCTIONS FROM THIS RULE

Year	Without this rule (base case)		With this rule (control case)
	HDV annual NO_X tons	HDV annual NO_X tons as a percent of total NO_X	Reductions in annual HDV NO_X tons
1996	4,810,000	18	n/a
2007	3,040,000	15	58,000
2020	2,560,000	14	1,820,000
2030	2,960,000	16	2,570,000

The contribution of heavy-duty vehicles to NO_X inventories in many MSAs is significantly greater than that reflected in the national average. For example, HDV contributions to total annual NO_X is greater than the national average in the eight metropolitan statistical areas listed in Table II.C–2. Examples of major cities with a history of persistent ozone violations that are heavily impacted by NO_X emissions from HDVs include: Los Angeles, Washington, DC, San Diego, Hartford, Atlanta, Sacramento. As presented in the table below, HDV's contribute from 22 percent to 33 percent of the total NO_X inventories in these selected cities. NO_X emissions also contribute to the formation of fine particulate matter, especially in the West. In all areas, NO_X also contributes to environmental and welfare effects such as regional haze, and eutrophication and nitrification of water bodies.

TABLE II.C–2—HEAVY-DUTY VEHICLE PERCENT CONTRIBUTION TO NO_X INVENTORIES IN SELECTED URBAN AREAS IN 2007

MSA, CMSA / State	HDV NO_X as portion of total NO_X (%)	HDV NO_X as portion of mobile source NO_X (%)
National	*15*	*28*
Sacramento, CA	33	37
Hartford, CT	28	38
San Diego, CA	25	28
San Francisco, CA	24	29
Atlanta, GA	22	34
Los Angeles	22	26
Dallas	22	28
Washington-Baltimore, MSA	22	36

2. PM Emissions

Nationally, we estimate that primary emissions of PM_{10} to be about 33 million tons/year in 2007. Fugitive dust, other miscellaneous sources and crustal material (wind erosion) constitute approximately 90 percent of the 2007 PM_{10} inventory. However, there is evidence from ambient studies that emissions of these materials may be overestimated and/or that once emitted they have less of an influence on monitored PM concentration than this inventory share would suggest. Mobile sources account for 22 percent of the PM_{10} inventory (excluding the contribution of miscellaneous and natural sources) and highway heavy-duty engines, the subject of today's action, account for 20 percent of the mobile source portion of national PM_{10} emissions in 2007.

The contribution of heavy-duty vehicle emissions to total PM emissions in some metropolitan areas is substantially higher than the national average. This is not surprising, given the high density of these engines operating in these areas. For example, in Los Angeles, Atlanta, Hartford, San Diego, Santa Fe, Cincinnati, and Detroit, the estimated 2007 highway heavy-duty vehicle contribution to mobile source PM_{10} ranges from 25 to 38 percent, while the national percent contribution to mobile sources for 2007 is projected to be about 20 percent. As illustrated in Table II.C–3, heavy-duty vehicles operated in El Paso, Indianapolis, San Francisco, and Minneapolis also account for a higher portion of the mobile source PM inventory than the national average. These data are based on updated inventories developed for this rulemaking. Importantly, these estimates do not include the contribution from secondary PM, which is an important component of diesel PM.

TABLE II.C–3—2007 HEAVY-DUTY VEHICLE CONTRIBUTION TO URBAN MOBILE SOURCE PM INVENTORIES

MSA, State	HDV PM Contribution to mobile source PMG[a]
National (48 State)	*20*
Atlanta, GA MSA	25
Cincinnati-Hamilton, OH–KY–IN CMSA	26
Detroit-Ann Arbor-Flint, MI CMSA	25
El Paso, TX MSA	23
Hartford, CT MSA	30
Indianapolis, IN MSA	23
Los Angeles-Riverside-Orange County, CA CMSA	25
Minneapolis-St. Paul, MN–WI MSA	23
San Diego, CA MSA	27
San Francisco-Oakland-San Jose, CA CMSA	24
Santa Fe, NM MSA	38

[a] Direct exhaust emissions only; excludes secondary PM.

The city-specific emission inventory analysis and investigations of ambient $PM_{2.5}$ summarized in the RIA indicate that the contribution of diesel engines to PM inventories in several urban areas around the U.S. is much higher than indicated by the national PM emission inventories only. One possible explanation for this is the concentrated use of diesel engines in certain local or regional areas which is not well represented by the national, yearly average presented in national PM emission inventories. Another reason may be underestimation of the in-use diesel PM emission rates. Our current modeling incorporates deterioration only as would be experienced in properly maintained, untampered vehicles. We are currently in the process of reassessing the rate of in-use deterioration of diesel engines and vehicles which could significantly increase the contribution of HDVs to diesel PM.

EXHIBIT J

3. Environmental Justice

Environmental justice is a priority for EPA. The Federal government stated its concern, in part, over this issue through issuing Executive Order 12898, Federal Actions To Address Environmental Justice in Minority Populations and Low-Income Populations (February 11, 1994). This Order requires that federal agencies make achieving environmental justice part of their mission. Similarly, the EPA created an Office of Environmental Justice (originally the Office of Environmental Equity) in 1992, commissioned a task force to address environmental justice issues, oversees a Federal Advisory Committee addressing environmental justice issues (the National Environmental Justice Advisory Council), and has developed an implementation strategy as required under Executive Order 12898.

Application of environmental justice principles as outlined in the Executive Order advances the fair treatment of people of all races, income, and culture with respect to the development, implementation, and enforcement of environmental laws, regulations, and policies. Fair treatment implies that no person or group of people should shoulder a disproportionate share of any negative environmental impacts resulting from the execution of this country's domestic and foreign policy programs.

For the last several years, environmental organizations and community-based citizens groups have been working together to phase out diesel buses in urban areas. For example, the Natural Resources Defense Council initiated a ''Dump Dirty Diesel'' campaign in the 1990s to press for the phase out of diesel buses in New York City. Other environmental organizations operating in major cities such as Boston, Newark, and Los Angeles have joined this campaign. The Coalition for Clean Air worked with NRDC and other experts to perform exposure monitoring in communities located near distribution centers where diesel truck traffic is heavy. These two organizations concluded that facilities with heavy truck traffic are exposing local communities to diesel exhaust concentrations far above the average levels in outdoor air. The report states: ''These affected communities, and the workers at these distribution facilities with heavy diesel truck traffic, are bearing a disproportionate burden of the health risks.'' [72] Other diesel ''hot spots'' identified by the groups are bus terminals, truck and bus maintenance facilities, retail distribution centers, and busy streets and highways.

While there is currently a limited understanding of the relationship of environmental exposures to the onset of asthma, the environmental triggers of asthma attacks for children with asthma have become increasingly well characterized.[73] Asthma's burden falls hardest on the poor, inner city residents, and children. Among children up to 4 years of age, asthma prevalence increased 160 percent since 1980.[74] African-American children have an annual rate of hospitalization three times that for white children, and are four times as likely to seek care at an emergency room.[75] In 1995, the death rate from asthma in African-American children, 11.5 per million, was over four times the rate in white American children, 2.6 per million.[76]

Local community groups and private citizens testified at public hearings held for this rule that the residents of their communities suffer greatly, and disproportionally, from air pollution in general, and emissions from heavy-duty vehicles in particular. For example, a testifier in New York pointed out that ''since Northern Manhattan and the South Bronx experience asthma mortality and morbidity rates at three to five times greater than the citywide average, New York City's problem is Northern Manhattan's crisis.'' [77]

The new standards established in this rulemaking are expected to improve air quality across the country and will provide increased protection to the public against a wide range of health effects, including chronic bronchitis, respiratory illnesses, and aggravation of asthma symptoms. These air quality and public health benefits could be expected to mitigate some of the environmental justice concerns related to heavy-duty vehicles since the rule will provide relatively larger benefits to heavily impacted urban areas.

D. Anticipated Emissions Benefits

This subsection presents the emission benefits we anticipate from heavy-duty vehicles as a result of our new NO_X, PM, and NMHC emission standards for heavy-duty engines. The graphs and tables that follow illustrate the Agency's projection of future emissions from heavy-duty vehicles for each pollutant. The baseline case represents future emissions from heavy-duty vehicles at present standards (including the MY2004 standards). The controlled case quantifies the future emissions of heavy-duty vehicles once the new standards in this FRM are implemented.

We use the same baseline inventory as is used in the county-by-county, hour-by-hour air quality analyses associated with this rule. However, we made a slight modification to the controlled inventory to incorporate the changes between the proposed and final standards. Because the detailed air quality analyses took several months to perform, we had to use the proposed standards for the air quality analysis. Since beginning this analysis, we updated the control case emission inventories to reflect the final phase-in of the NO_X standard, slight changes to the timing of the HDGV standards, a temporary compliance option for introducing the low sulfur fuel requirements, and various hardship provisions for refiners in our emission inventory projections. The emission inventory calculations are presented in detail in the Regulatory Impact Analysis.

1. NO_X Reductions

The Agency expects substantial NO_X reductions on both a percentage and a tonnage basis from the new standards. The RIA provides additional projections between 2007 and 2030. As stated previously, HDVs contribute about 15 percent to the national NO_X inventory for all sources in 2007. Figure II.D–1 shows our national projections of total NO_X emissions with and without the engine controls finalized today. Table II.D–1 presents the total reductions.[78] This includes both exhaust and crankcase emissions.[79] The standards

[72] *Exhausted by Diesel: How America's Dependence on Diesel Engines Threatens Our Health,* Natural Resources Defense Council, Coalition for Clean Air, May 1998.

[73] *Asthma and the Environment: A Strategy to Protect Children, President's Task Force on Environmental Health Risks and Safety Risks to Children,* January 28, 1999, Revised May, 2000.

[74] Asthma Statistics, National Institutes of Health, National Heart, Lung and Blood Institute, January, 1999.

[75] *Asthma and the Environment: A Strategy to Protect Children, President's Task Force on Environmental Health Risks and Safety Risks to Children,* January 28, 1999, Revised May, 2000. The Task Force was formed in conjunction with Executive Order 13045 (April 21, 1997), is co-chaired by Department of Health and Human Services and EPA, and is charged with recommending strategies for protecting children's environmental health and safety. In April, 1998, the Task Force identified childhood asthma as one of its top four priorities for immediate attention.

[76] *Id.*

[77] Testimony by Peggy Shepard, Executive Director, West Harlem Environmental Action, June 19th, 2000.

[78] The baseline used for this calculation is the 2004 HDV standards (64 FR 58472). These reductions are in addition to the NO_X emissions reductions projected to result from the 2004 HDV standards.

[79] We include in the NO_X projections excess emissions, developed by the EPA's Office of Enforcement and Compliance, that were emitted by many model year 1998–98 diesel engines. This is described in more detail in Chapter 2 of the RIA.

EXHIBIT J

should result in close to a 90 percent reduction in NO_X from new engines.

BILLING CODE 6560–50–P

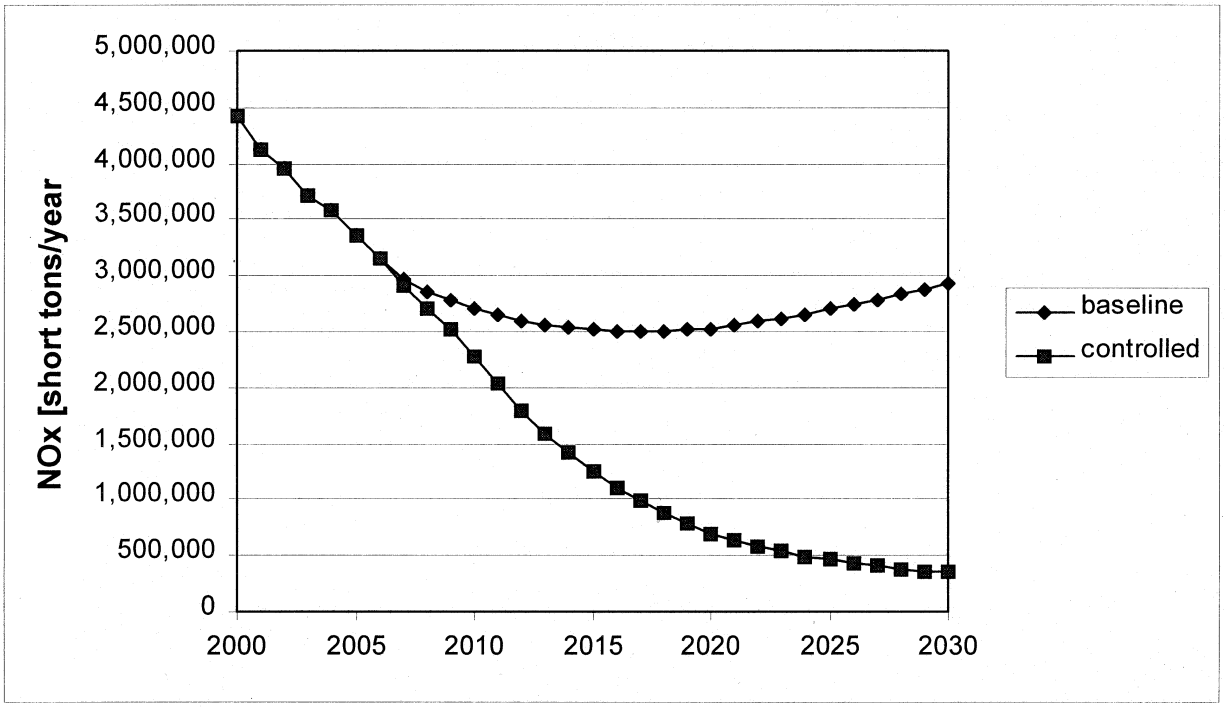

Figure II.D-1: Projected Nationwide Heavy-Duty Vehicle NOx Emissions

BILLING CODE 6560–50–C

EXHIBIT J

TABLE II.D–1.—ESTIMATED REDUCTIONS IN NO_X

Calendar year	NO_X reduction [thousand short tons]
2007	58
2010	419
2015	1,260
2020	1,820
2030	2,570

2. PM Reductions

As stated previously, HDVs will contribute about 20 percent to the 2007 national PM_{10} inventory for mobile sources. The majority of the projected PM reductions are directly a result of the exhaust PM standard. However, a modest amount of PM reductions will come from reducing sulfur in the fuel. For the existing fleet of heavy-duty vehicles, a small fraction of the sulfur in diesel fuel is emitted directly into the atmosphere as direct sulfate, and a portion of the remaining fuel sulfur is transformed in the atmosphere into sulfate particles, referred to as indirect sulfate. Reducing sulfur in the fuel decreases the amount of direct sulfate PM emitted from heavy-duty diesel engines and the amount of heavy-duty diesel engine SOx emissions that are transformed into indirect sulfate PM in the atmosphere.[80] For engines meeting the new standards, we consider low sulfur fuel to be necessary to enable the PM control technology. In other words, we do not claim an additional benefit beyond the new exhaust standard for reductions in direct sulfate PM for new engines. However, once the low sulfur fuel requirements go into effect, many pre-2007 model year engines would also be using low sulfur fuel. Because these pre-2007 model year engines are certified with higher sulfur fuel, they will achieve reductions in PM beyond their certification levels.

Figure II.D–2 shows our national projections of total HDV PM (TPM) emissions with and without the new engine controls. This figure includes brake and tire wear, crankcase emissions and the direct sulfate PM (DSPM) benefits due to the use of low sulfur fuel by the existing fleet. These direct sulfate PM benefits from the existing fleet are also graphed separately. The new standards will result in about a 90 percent reduction in exhaust PM from new heavy-duty diesel engines. The low sulfur fuel should result in more than a 95 percent reduction in direct sulfate PM from pre-2007 heavy-duty diesel engines. Due to complexities of the conversion and removal processes of sulfur dioxide, we do not attempt to quantify the indirect sulfate reductions that would be derived from this rulemaking in the inventory analysis. Nevertheless, we recognize that these indirect sulfate PM reductions contribute significant additional benefits to public health and welfare, and we include this effect in our more detailed air quality analysis.

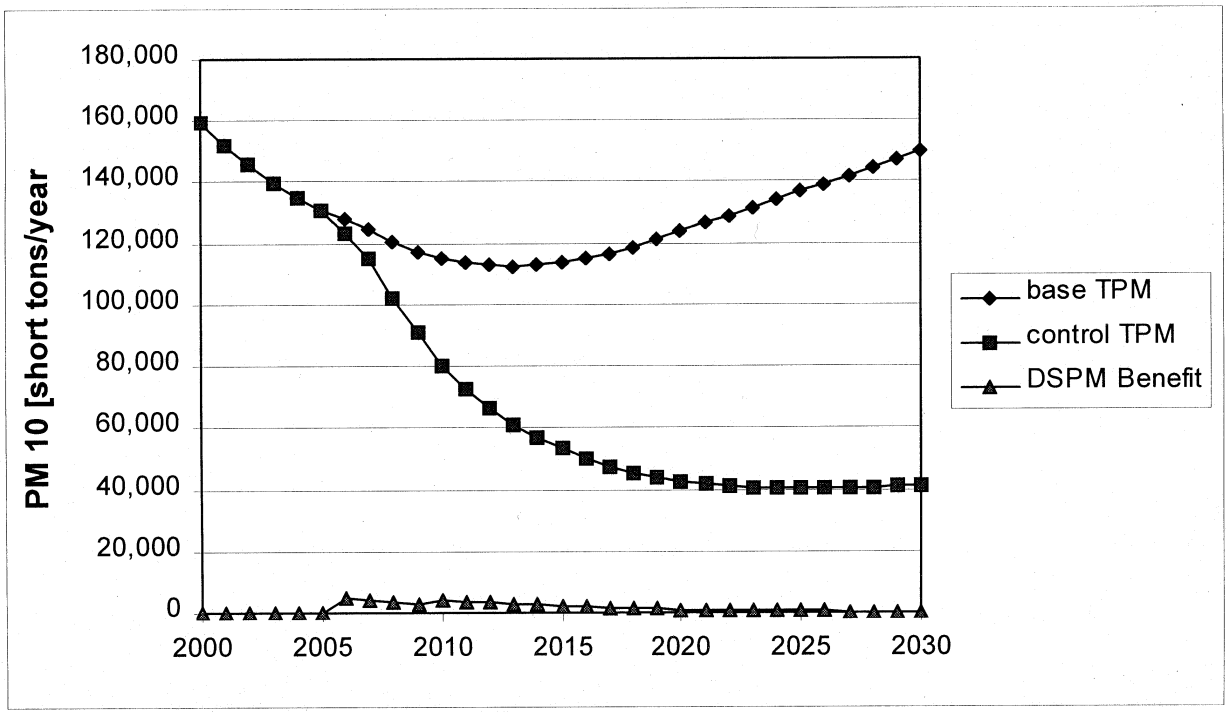

Figure II.D-2: Projected Nationwide Heavy-Duty Vehicle PM Emissions and Direct Sulfate Emission Reductions

[80] Sulfate forms a significant portion of total fine particulate matter in the Northeast Chemical speciation data in the Northeast collected in 1995 shows that the sulfate fraction of fine particulate matter ranges from 20 and 27 percent of the total fine particle mass. *Determination of Fine Particle and Concentrations and Chemical Composition in the Northeastern United States. 1995.* NESCAUM, prepared by Cass, et al., September 1999.

EXHIBIT J

TABLE II.D–2.—ESTIMATED REDUCTIONS IN PM

Calendar year	PM reduction [thousand short tons]
2007	11
2010	36
2015	61
2020	82
2030	109

3. NMHC Reductions

The standards described in Section III are designed to be feasible for both gasoline and diesel heavy-duty vehicles. Although the standards give manufacturers the same phase-in for NMHC as for NO_X, we model the NMHC reductions for diesel vehicles to be fully in place in 2007 due to the application of particulate control technology. We believe the use of aftertreatment for PM control will cause the NMHC levels to be below the standards as soon as the PM standard goes into effect in 2007.

HDVs account for about 3 percent of national VOC and 8 percent from mobile sources in 2007. Figure II.D–3 shows our national projections of total NMHC emissions with and without the new engine controls. This includes both exhaust emissions and evaporative emissions. Table II.D–3 presents the projected reductions of NMHC due to the new standards.

BILLING CODE 6560–50–P

EXHIBIT J

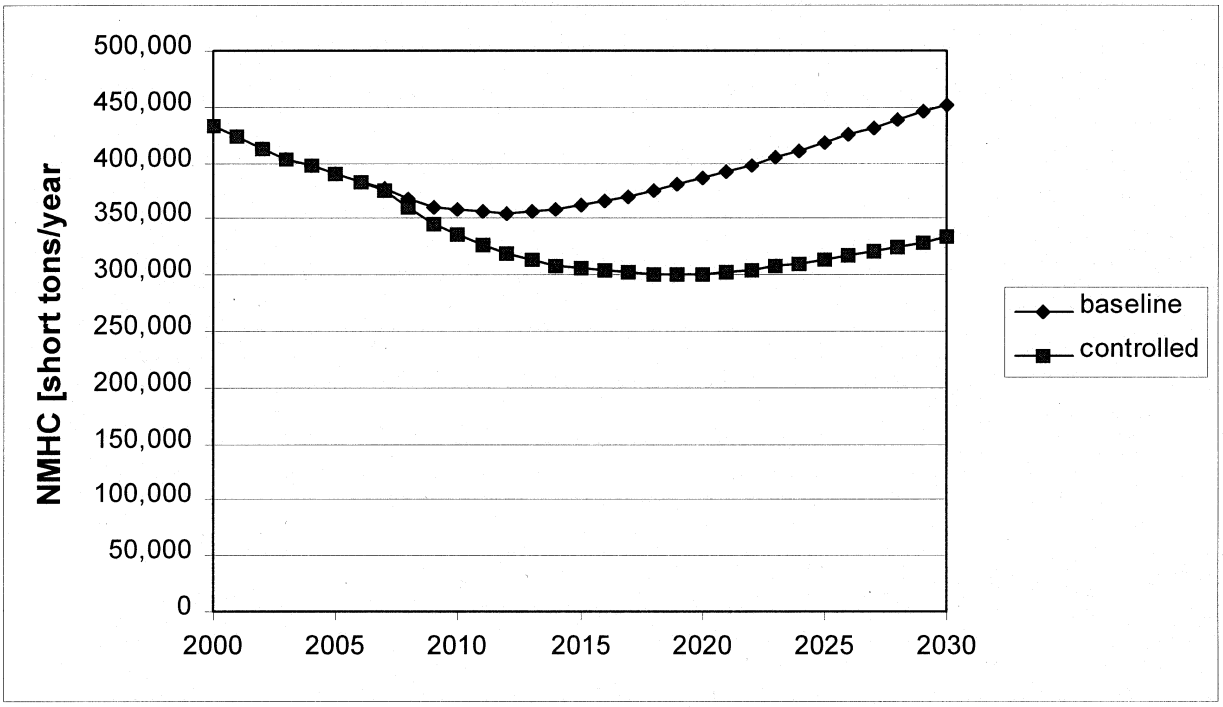

Figure II.D-3: Projected Nationwide Heavy-Duty Vehicle NMHC Emissions

BILLING CODE 6560–50–C

EXHIBIT J

TABLE II.D–3.—ESTIMATED REDUCTIONS IN NMHC

Calendar year	NMHC reduction [thousand short tons]
2007	2
2010	21
2015	54
2020	83
2030	115

4. Additional Emissions Benefits

This subsection looks at tons/year emission inventories of CO, SO_X, and air toxics from HDEs. Although we are not including stringent standards for these pollutants in this action, we believe the standards will result in reductions in CO, SO_X, and air toxics. Here, we present our anticipated benefits.

a. CO Reductions

In 2007, HDVs are projected to contribute to approximately 5 percent of national CO and 9 percent of CO from mobile sources. Although it does not include new CO emission standards, today's action would nevertheless be expected to result in a considerable reduction in CO emissions from heavy-duty vehicles. CO emissions from heavy-duty diesel vehicles, although already very low, would likely be reduced by an additional 90 percent due to the operation of emissions control systems that will be necessary to achieve today's new standards for hydrocarbons and particulate matter. CO emissions from heavy-duty gasoline vehicles would also likely decline as the NMHC emissions are decreased. Table II.D–4 presents the projected reductions in CO emissions from HDVs.

TABLE II.D–4.—ESTIMATED REDUCTIONS IN CO

Calendar year	CO reduction [thousand short tons]
2007	56
2010	317
2015	691
2020	982
2030	1,290

b. SO_X Reductions

HDVs are projected to emit approximately 0.5 percent of national SO_X and 8 percent of mobile source SO_X in 2007. We are requiring significant reductions in diesel fuel sulfur to enable certain emission control devices to function properly. We expect SO_X emissions to decline as a direct benefit of low sulfur diesel fuel. The majority of these benefits will be from heavy-duty highway diesel vehicles; however, some benefits will also come from highway fuel burned in other applications such as light-duty diesel vehicles and nonroad engines. As discussed in greater detail in the section on PM reductions, the amount of sulfate particles (direct and indirect) formed as a result of diesel exhaust emissions will decline for all HD diesel engines operated on low sulfur diesel fuel, including the current on-highway HD diesel fleet, and those non-road HD diesel engines that may operate on low sulfur diesel fuel in the future. Table II.D–5 presents our estimates of SO_X reductions resulting from the low sulfur fuel.

TABLE II.D–5.—ESTIMATED REDUCTIONS IN SO_X DUE TO LOW SULFUR FUEL

Calendar year	SO_X reduction [thousand short tons]
2007	79
2010	107
2015	117
2020	126
2030	142

c. Air Toxics Reductions

This FRM establishes new non-methane hydrocarbon standards for all heavy-duty vehicles and a formaldehyde standard for complete heavy-duty vehicles. Hydrocarbons are a broad class of chemical compounds containing carbon and hydrogen. Many forms of hydrocarbons, such as formaldehyde, are directly hazardous and contribute to what are collectively called ''air toxics.'' Air toxics are pollutants known to cause or suspected of causing cancer or other serious human health effects or ecosystem damage. The Agency has identified at least 20 compounds emitted from on-road gasoline vehicles that have toxicological potential, 19 of which are emitted by diesel vehicles, as well as an additional 20 compounds which have been listed as toxic air contaminants by California ARB.[81] [82] This action also will reduce emissions of diesel exhaust and diesel particulate matter (see Section II.B for a discussion of health effects).

Our assessment of heavy-duty vehicle (gasoline and diesel) air toxics focuses on the following compounds with cancer potency estimates that have significant emissions from heavy-duty vehicles: benzene, formaldehyde, acetaldehyde, and 1,3-butadiene. These compounds are an important, but limited, subset of the total number of air toxics that exist in exhaust and evaporative emissions from heavy-duty vehicles. The reductions in air toxics quantified in this section represent only a fraction of the total number and amount of air toxics reductions expected from the new hydrocarbon standards.

For this analysis, we estimate that air toxic emissions are a constant fraction of hydrocarbon exhaust emissions from future engines. Because air toxics are a

[81] National Air Quality and Emissions Trends Report, 1997, (EPA 1998), p. 74.

[82] California Environmental Protection Agency (1998) Report to the Air Resources Board on the Proposed Identification of Diesel Exhaust as a Toxic Air Contaminant. Appendix III, Part A: Exposure Assessment. April 1998.

EXHIBIT J

subset of hydrocarbons, and new emission controls are not expected to preferentially control one type of air toxic over another, the selected air toxics chosen for this analysis are expected to decline by the same percentage amount as hydrocarbon exhaust emissions. We have not performed a separate analysis for the new formaldehyde standard since compliance with the hydrocarbon standard should result in compliance with the formaldehyde standard for all petroleum-fueled engines. The RIA provides more detail on this analysis. Table II.D–6 shows the estimated air toxics reductions associated with the reductions in hydrocarbons.

TABLE II.D–6.—ESTIMATED REDUCTIONS IN AIR TOXICS (SHORT TONS)

Calendar year	Benzene	Formaldehyde	Acetaldehyde	1,3-Butadiene
2007	24	181	67	14
2010	356	1,670	608	135
2015	965	4,720	1,720	384
2020	1,340	7,080	2,600	567
2030	1,960	10,200	3,730	823

E. Clean Heavy-Duty Vehicles and Low-Sulfur Diesel Fuel are Critically Important for Improving Human Health and Welfare

Despite continuing progress in reducing emissions from heavy-duty engines, emissions from these engines continue to be a concern for human health and welfare. Ozone continues to be a significant public health problem, and affects not only people with impaired respiratory systems, such as asthmatics, but healthy children and adults as well. Ozone also causes damage to plants and has an adverse impact on agricultural yields. Particulate matter, like ozone, has been linked to a range of serious respiratory health problems, including premature mortality, aggravation of respiratory and cardiovascular disease, aggravated asthma, acute respiratory symptoms, and chronic bronchitis. Importantly, EPA has concluded that diesel exhaust is likely to be carcinogenic to humans by inhalation at occupational and environmental levels of exposure.

Today's action will reduce NO_X, VOC, CO, PM, and SO_X emissions from these heavy-duty vehicles substantially. These reductions will help reduce ozone levels nationwide and reduce the frequency and magnitude of predicted exceedances of the ozone standard. These reductions will also help reduce PM levels, both by reducing direct PM emissions and by reducing emissions that give rise to secondary PM. The NO_X and SO_X reductions will help reduce acidification problems, and the NO_X reductions will help reduce eutrophication problems. The PM and NO_X standard enacted today will help improve visibility. All of these reductions are expected to have a beneficial impact on human health and welfare by reducing exposure to ozone, PM, diesel exhaust and other air toxics and thus reducing the cancer and noncancer effects associated with exposure to these substances.

III. Heavy-Duty Engine and Vehicle Standards

In this section, we describe the vehicle and engine standards we are finalizing today to respond to the serious air quality needs discussed in Section II. Specifically, we discuss:

- The CAA and why we are finalizing new heavy-duty standards.
- The technology opportunity for heavy-duty vehicles and engines.
- Our new HDV and HDE standards, and our phase-in of those standards.
- Why we believe the stringent standards being finalized today are feasible in conjunction with the low sulfur gasoline required under the recent Tier 2 rule and the low sulfur diesel fuel being finalized today.
- The effects of diesel fuel sulfur on the ability to meet the new standards, and what happens if high sulfur diesel fuel is used.
- Plans for future review of the status of heavy-duty diesel NO_X emission control technology.

A. Why Are We Setting New Heavy-Duty Standards?

We are finalizing new heavy-duty vehicle and engine standards and related provisions under section 202(a)(3) of the CAA, which authorizes EPA to establish emission standards for new heavy-duty motor vehicles. (See 42 U.S.C. 7521(a)(3).) Section 202(a)(3)(A) requires that such standards ''reflect the greatest degree of emission reduction achievable through the application of technology which the Administrator determines will be available for the model year to which such standards apply, giving appropriate consideration to cost, energy, and safety factors associated with the application of such technology.'' Section 202(a)(3)(B) allows EPA to take into account air quality information in revising such standards. Because heavy-duty engines contribute greatly to a number of serious air pollution problems, especially the health and welfare effects of ozone, PM, and air toxics, and because millions of Americans live in areas that exceed the national air quality standards for ozone or PM, we believe the air quality need for tighter heavy-duty standards is well founded. This, and our belief that a significant degree of emission reduction from heavy-duty vehicles and engines is achievable, giving appropriate consideration to cost, energy, and safety factors, through the application of new diesel emission control technology, further refinement of well established gasoline emission controls, and reductions of diesel fuel sulfur levels, leads us to believe that new emission standards are warranted.

B. Emission Control Technologies for Heavy-Duty Vehicles and Engines

For the past 30 or more years, emission control development for gasoline vehicles and engines has concentrated most aggressively on exhaust emission control devices. These devices currently provide as much as or more than 95 percent of the emission control on a gasoline vehicle. In contrast, the emission control development work for diesels has concentrated on improvements to the engine itself to limit the emissions leaving the combustion chamber.

However, during the past 15 years, more development effort has been put into diesel exhaust emission control devices, particularly in the area of PM control. Those developments, and recent developments in diesel NO_X control devices, make the widespread commercial use of diesel exhaust emission controls feasible. Through use of these devices, we believe emissions control similar to that attained by gasoline applications will be possible with diesel applications. However, without low sulfur diesel fuel, these technologies cannot be implemented on heavy-duty diesel applications. Low sulfur diesel fuel will at the same time

EXHIBIT J

also allow these technologies to be implemented on light-duty diesel applications.

As discussed at length in the preamble to our proposal, several exhaust emission control devices have been or are being developed to control harmful diesel exhaust pollutants. Of these, we believe that the catalyzed diesel particulate trap and the NO_X adsorber are the most likely candidates to be used to meet the very low diesel exhaust emission standards adopted today on the variety of applications in the heavy-duty diesel market. While other technologies exist that have the potential to provide significant emission reductions, such as selective catalytic reduction systems for NO_X control, and development of these technologies is being pursued to varying degrees, we believe that the catalyzed diesel particulate trap and the NO_X adsorber will be the only likely broadly applicable technology choice by the makers of engines and vehicles for the national fleet in this timeframe. However, as discussed in detail in the Final RIA, we strongly believe that none of these technologies can be brought to market on diesel engines and vehicles unless the kind of low sulfur diesel fuel adopted in this rule is available.

As for gasoline engines and vehicles, improvement continues to be made to gasoline emissions control technology. This includes improvement to catalyst designs in the form of improved washcoats and improved precious metal dispersion. Much effort has also been put into improved cold start strategies that allow for more rapid catalyst light-off. This can be done by retarding the spark timing to increase the temperature of the exhaust gases, and by using air-gap manifolds, exhaust pipes, and catalytic converter shells to decrease heat loss from the system.

These improvements to gasoline emission controls will be made in response to the California LEV–II standards and the federal Tier 2 standards.[83] These improvements should transfer well to the heavy-duty gasoline segment of the fleet. With such migration of light-duty technology to heavy-duty vehicles and engines, we believe that considerable improvements to heavy-duty gasoline emissions can be realized, thus allowing vehicles to meet the much more stringent standards adopted today.

The following discussion provides more detail on the technologies we believe are most capable of meeting very stringent heavy-duty emission standards. The goal of this discussion is to describe the emission reduction capability of these emission control technologies and their critical need for diesel fuel sulfur levels as low as those being finalized today. But first, we present the details of the new emission standards being finalized today.

C. What Engine and Vehicle Standards Are We Finalizing?

1. Heavy-Duty Engine Exhaust Emissions Standards

a. FTP Standards [84]

The emission standards finalized today for heavy-duty engines are summarized in Table III.C–1. For reasons explained below, the phase-in schedule for these standards differs from the proposed schedule. We are also finalizing an incentive provision to encourage the early introduction of engines meeting these new standards. This incentive provision is explained in section III.D. In addition, we have altered our Averaging, Banking, and Trading (ABT) provisions from what was proposed. The final ABT provisions are discussed in detail in section VI.

TABLE III.C–1.—FULL USEFUL LIFE HEAVY-DUTY ENGINE EXHAUST EMISSIONS STANDARDS AND PHASE-INS FOR INCOMPLETE VEHICLES

		Standard (g/bhp-hr)	Phase-In by Model Year [a]			
			2007	2008	2009	2010
Diesel	NO_X	0.20	50%	50%	50%	100%
	NMHC	0.14	50%	50%	50%	100%
	PM	0.01	100%	100%	100%	100%
Gasoline	NO_X	0.20	0%	50%	100%	100%
	NMHC	0.14	0%	50%	100%	100%
	PM	0.01	0%	50%	100%	100%

[a] Percentages represent percent of sales.

With respect to PM, this new standard represents a 90 percent reduction for most heavy-duty diesel engines from the current PM standard. The current PM standard for most heavy-duty engines, 0.10 g/bhp-hr, was implemented in the 1994 model year; the PM standard for urban buses implemented in that same year was 0.05 g/bhp-hr; these standards are not changing when other standards change in the 2004 model year timeframe. The new PM standard of 0.01 g/bhp-hr being finalized today is projected to require the addition of highly efficient PM traps to diesel engines, including those diesel engines used in urban buses; it is not expected to require the addition of any new hardware for gasoline engines.

With respect to NMHC and NO_X, these new standards represent significant reductions from the 2004 diesel engine standard which is either 2.4 g/bhp-hr NO_X+NMHC, or 2.5 g/bhp-hr NO_X+NMHC with a cap on NMHC of 0.5 g/bhp-hr. We generally expect that 2004 diesel engines will meet those standards with emission levels around 2.2 g/bhp-hr NO_X and 0.2 g/bhp-hr NMHC. Like the PM standard, the new NO_X standard is projected to require the addition of a highly efficient NO_X emission control system to diesel engines which, with help from the PM trap, will need to be optimized to control NMHC emissions. For gasoline

[83] See Chapter IV.A of the final Tier 2 Regulatory Impact Analysis, contained in Air Docket A–97–10, and McDonald, Joseph, and Jones, Lee, ''Demonstration of Tier 2 Emission Levels for Heavy Light-Duty Trucks,'' SAE 2001–01–1957.

[84] The Phase 1 heavy-duty rule recently promulgated by EPA specified two supplemental sets of standards for heavy-duty diesel engines. (See 65 FR 59896, October 6, 2000.) Manufacturers of heavy-duty diesel engines must meet these supplemental standards, the Supplemental Emission Test (SET, formerly referred to as the Supplemental Steady-State (SSS) test) and the Not-to-Exceed (NTE) standards, beginning in model year 2007, in addition to meeting the preexisting standards, which must be met using the preexisting federal test procedure (FTP). For the purposes of this preamble, we refer to the standards met using the preexisting FTP as the FTP standards, though the SET and NTE test procedures have now been added to the regulations establishing the various federal test procedures for heavy-duty diesel engines.

EXHIBIT J

engines, the 2005 model year standard recently finalized in the Phase 1 heavy-duty rule is 1.0 g/bhp-hr NO_X+NMHC. (See 65 FR 59896, October 6, 2000.) There is a direct trade off between NO_X and NMHC emissions with a gasoline engine, but we would generally expect NO_X levels over 0.5 g/bhp-hr and NMHC levels below that. Regardless of the NO_X and NMHC split, today's standards represent significant reductions for 2008 and later engines that will require substantial improvement in the effectiveness of heavy-duty gasoline emission control technology.

We proposed a new formaldehyde standard of 0.016 g/bhp-hr for both heavy-duty diesel and gasoline engines. However, we have decided not to finalize those standards. We proposed the formaldehyde (HCHO) standard because it is a hazardous air pollutant that is emitted by heavy-duty engines and other mobile sources. In the proposal, we stated our belief that formaldehyde emissions from gasoline and diesel engines are and will remain inherently low, but having the standard would ensure that excess emissions would not occur. Several commenters took issue with our proposed standard claiming that the benefits were nonexistent, that we should address toxic emissions in our toxics rulemaking, and that we had shown neither its technological feasibility nor its measurability. After further consideration we do believe that the proposed formaldehyde standard is not necessary because the NMHC standard we are promulgating today will almost certainly result in formaldehyde emissions well below our proposed formaldehyde standard. As a result, other comments on this issue such as those concerning technological feasibility and measurability are no longer relevant to this rule. We will continue to evaluate this issue to ensure that formaldehyde emissions do not become a problem in the future and may take action to consider standards if warranted.

We believe a phase-in of the diesel NO_X standard is appropriate. With a phase-in, manufacturers are able to introduce the new technology on a portion of their engines, thereby gaining valuable experience with the technology prior to implementing it on their entire fleet. Also, we are requiring that the NO_X, and NMHC standards be phased-in together for diesel engines. That is, engines will be expected to meet both of these new standards, not just one or the other. We are requiring this because the standard finalized in the Phase 1 heavy-duty rule is a combined NMHC+NO_X standard. With separate NO_X and NMHC phase-ins, say 50/50/50/100 for NO_X and 100 percent in 2007 for NMHC, the 2.5 gram engines being phased-out would have a 2.5 gram NO_X+NMHC standard and a new 0.14 gram NMHC standard with which to comply. While this could be done, we believe that it introduces unnecessary compliance complexity to the program.

In our NPRM, we requested comment on a range of possible phase-in schedules for NO_X including anything from our primary proposal of 25/50/75/100 percent phase-in to a possible requirement for 100 percent compliance in the 2007 model year. We have determined that a 50/50/50/100 percent phase-in schedule is the most appropriate schedule for several reasons.

Some commenters argued that we should require 100 percent compliance in the 2007 model year because of the 0.20 gram standard was both technologically feasible and critical given the nation's air quality needs. Other commenters were concerned that 100 percent compliance to the 0.20 gram NO_X standard in the first year of the program was ill advised as it would provide little opportunity for industry to ''field test'' new NO_X control technologies. These commenters also expressed concern over workload burdens on industry members needing to redesign all of their new engines and vehicles in one year. Some commenters were concerned that a 25/50/75/100 percent phase-in schedule would introduce competitiveness issues whereby those vehicles equipped with new NO_X control technology may be less attractive to some buyers than vehicles without the technology, making them difficult for manufacturers to sell.

We set standards and implementation schedules based on many factors including technological feasibility, cost, energy, and safety. Considering these factors, we believe that industry should be provided the flexibility of having a phase-in of the new NO_X standard. As discussed in section III.E below, we believe the 0.20 gram NO_X standard is feasible in the 2007 time frame. However, we believe a phase-in is appropriate for a couple of reasons. First, the phase-in will provide industry with the flexibility to roll out the NO_X control technology on only a portion of their fleet. This will allow them to focus their resources on that half of their fleet being brought into compliance in 2007. This ability to focus their efforts will increase both the efficiency and the effectiveness of those efforts. Second, a phase-in allows industry the ability to introduce the new technology on those engines it believes are best suited for a successful implementation which, in turn, provides a valuable opportunity to refine that technology on only a portion of their product line prior to the next push toward full implementation.

Another concern with respect to our proposed phase-in schedule was raised by several commenters and pertains to its interaction with the final implementation schedule for the new supplemental requirements (the Supplemental Emission Test, SET, and the Not-to-Exceed, NTE). These requirements, finalized in the Phase 1 heavy-duty final rule, will be implemented in the 2007 model year on all heavy-duty diesel engines. (See 65 FR 59896, October 6, 2000.) Under a 25/50/75/100 percent phase-in schedule of new diesel engine emission requirements, 25 percent of engines in the 2007 model year would meet 0.20 and 0.01 g/bhp-hr NO_X and PM, while 75 percent would meet 2.5 and 0.01 g/bhp-hr NO_X and PM. Further, all of those engines would be required, beginning in the 2007 model year, to meet the supplemental requirements based on the FTP emission standards to which they were certified. A 25/50/75/100 percent phase-in schedule would change the supplemental requirements for those 25 percent of engines in the 2008 model year that would have to change to meet the new 50 percent compliance requirement. This change would be required even though the supplemental requirements on those 25 percent of engines were first implemented only one model year earlier, in model year 2007. Commenters have questioned whether this is consistent with section 202(a)(3)(c) of the Clean Air Act, which requires that standards for heavy-duty vehicles and engines apply for no less than three model years without revision. Under this argument, the supplemental requirements implemented in the 2007 model year must be allowed three model years of stability, meaning that no changes can be required to those standards until the 2010 model year.

The final phase-in schedule, 50/50/50/100 percent, addresses any concerns about violating the stability requirement of the Act and addresses the technology and lead time benefits of a phase-in as discussed above.[85] While this phase-in does not provide certain commenters with their goal of 100 percent implementation of very low NO_X engines in 2007, we believe it is

[85] EPA need not determine, at this time, whether the 25/50/75/100 percent phase-in schedule violates section 202(a)(3)(c), as the 50/50/50/100 percent phase-in schedule clearly does not and is available to all manufacturers.

EXHIBIT J

appropriate for the technology, cost, and other reasons described above. This 50/50/50/100 percent phase-in schedule does provide a more rapid implementation of low NO_X engines and, more importantly, provides more air quality benefits in 2007 than would our proposed phase-in schedule. We are also finalizing provisions that would encourage manufacturers to introduce clean technology, both diesel and gasoline, earlier than required in return for greater flexibility during the later years of our phase-in. These optional early incentive provisions are analogous to those included in our light-duty Tier 2 rule and are discussed in more detail in section III.D. We have also revised our Averaging, Banking, and Trading program to increase flexibility as discussed further in section VI.

For gasoline engines, we proposed 100 percent compliance in the 2007 model year. However, since the proposal was published, we have set new standards for heavy-duty gasoline engines that take effect in the 2005 model year. Therefore, the three year stability requirement of the CAA requires that today's new standards not apply until the 2008 model year at the earliest. Further, while we had not proposed a phase-in for gasoline standards, based on comments received we believe that a phase-in should be provided. The phase-in will allow manufacturers to implement improved gasoline control technologies on their heavy-duty gasoline engines in the same timeframe as they implement those technologies on their Tier 2 medium-duty passenger vehicles (MDPV). This consistency with Tier 2 is discussed in more detail below in section III.C.2 on vehicle standards. Note that the gasoline engine phase-in schedule is the same as but separate from the gasoline vehicle phase-in schedule discussed below. As we have done for diesel engines, we have also revised our Averaging, Banking, and Trading program for gasoline engines to increase flexibility as discussed further in section VI.

For a discussion of why we believe these standards are technologically feasible in the time frame required, refer to section III.E below and for a more detailed discussion refer to the RIA contained in the docket. The averaging, banking, and trading (ABT) provisions associated with today's standards are discussed in Section VI of this preamble. The reader should refer to that section for more details.

b. Supplemental Provisions for HD Diesel Engines (SET & NTE)

In addition to the new FTP standards for HD diesel engines contained in today's final action, we are also finalizing the supplemental emission standards we proposed to apply to the new HDDEs, with a number of changes as discussed in this section. The supplemental provisions will help ensure that HD diesel engines achieve the expected in-use emission reductions over a wide range of vehicle operation and a wide range of ambient conditions, not only the test cycle and conditions represented by the traditional FTP. The Agency has historically relied upon the FTP and the prohibition of defeat devices to ensure that HDDE emission control technologies which operate during the laboratory test cycle continue to operate in-use. The supplemental provisions are a valuable addition to the FTP and the defeat device prohibition to ensure effective in-use emission control. The supplemental provisions for HD diesel engines consist of two principal requirements, the supplemental emission test and associated standards (SET),[86] and the not-to-exceed test and associated standards (NTE). The supplemental emission standards finalized today for heavy-duty diesel engines are summarized in Table III.C–2.

TABLE III.C–2.—FULL USEFUL LIFE HEAVY-DUTY DIESEL ENGINE SUPPLEMENTAL EXHAUST EMISSIONS STANDARDS

Supplemental test	Requirements for NO_X, NMHC, PM
Supplemental emission test.	1.0 × FTP standard (or FEL).
Not-to-exceed test	1.5 × FTP standard (or FEL).

The SET and NTE test procedures were recently adopted for 2007 on-highway HD diesel engines. (See 65 FR 59896, October 6, 2000.) In the recent HD Phase 1 rulemaking which promulgated the SET and NTE, the supplemental provisions were finalized in the context of the emission control technology expected to be used to meet the 2004 FTP standards, *i.e.,* injection timing strategies and cooled EGR. In this final action, we are finalizing a number of changes to the supplemental provisions to address specific technical issues raised by commenters and which result from the expected application of high efficiency exhaust emission control devices on HD diesel engines and vehicles to meet today's new standards. These changes are minor in nature and will not impact the emission reductions we expect from the Phase 2 standards. These changes are discussed in the following sections. Additional discussion regarding the supplemental provisions for HDDEs is contained in the RIA and the Response to Comments (RTC) for this final rule, as well as in Section III.E of this preamble (''Feasibility of the New Engine and Vehicle Standards'').

i. Supplemental Emission Test

We are finalizing supplemental emission test provisions for HD diesel engines and vehicles certified to the new FTP standards contained in this final rule. The SET emission standard is equal to 1.0 times the FTP standard or FEL for HD diesel engines. Emission results from this test must meet the numerical standards for the FTP. The SET requirements are phased-in beginning with the 2007 model year, consistent with the phase-in of the new FTP standards. The supplemental emission test duty cycle consists of 13 modes of speed and torque, primarily covering the typical highway cruise operating range of heavy-duty diesel engines. The emission results from each of the modes are weighted by defined factors in the regulations, and the final weighted emission value for each pollutant must meet the SET standard. In addition, several of the 13 individual modes are in the NTE control zone, and must meet the applicable NTE requirements. The SET test is a laboratory test performed using an engine dynamometer under the same conditions which apply to the FTP, as specified in the regulations. (See 40 CFR 86.1360.)

The regulations for the SET in model year 2007 as they apply to the 2004 FTP emission standards contain additional steady-state test point emission limits. The Phase 1 supplemental requirements define a ''Maximum Allowable Emission Limit'' (MAEL) which the engines must comply with. The Phase 1 regulations allowed EPA to randomly select up to three steady-state test points prior to certification which the manufacturer would test to show compliance with the MAEL. These test points are referred to as ''mystery points''. In this final rule we have eliminated the MAEL for engines certified to the Phase 2 standards. The MAEL assures that an engine is calibrated to maintain emission control similar to the SET test under steady state conditions across the engine map, not just at the pre-defined 13 test points

[86] In the Phase 1 rulemaking, the Supplemental Emission Test was referred to as the supplemental steady state test. As discussed in the Phase 1 rule, the supplemental steady state test is based on and is consistent with the European Commissions ''EURO III ESC'' test. (See 65 FR 59915.) In this final rule we have renamed the supplemental steady state test the Supplemental Emission Test (SET).

EXHIBIT J

which comprise the SET test. For Phase 1 engines the MAEL was necessary to ensure this potential for gaming did not occur because the difference between the FTP standard and the NTE standard could be large, for example, 0.625 g/bhp-hr for NMHC + NO_X. However, for Phase 2 engines the NTE requirements are a mere 0.10 g/bhp-hr NO_X greater than the FTP standard. Considering this small increment, we have eliminated the MAEL for Phase 2 engines because it is redundant with the NTE. For the same reasons, we have eliminated the certification ''mystery points'' for engines complying with today's diesel engine standards.

ii. Not-to-Exceed

We are also finalizing revisions to the not-to-exceed emission standards for HD diesel engines certified to the Phase 2 FTP standards contained in this final rule. These NTE procedures apply under engine operating conditions within the range specified in the NTE test procedure that could reasonably be expected to be seen in normal vehicle operation and use. (See 40 CFR 86.1370.) The NTE procedure defines limited and specific engine operating regions (*i.e.,* speed and torque conditions) and ambient operating conditions (*i.e.,* altitude, temperature, and humidity conditions) which are subject to the NTE emission standards. Emission results from this test procedure must be less than or equal to 1.5 times the FTP standards (or FEL) for NO_X, NMHC, and PM. The new NTE requirements are phased-in starting with the 2007 model year, consistent with the new FTP standards.

The Not-To-Exceed (NTE) provisions were recently finalized for HDDEs certified to the 2004 FTP emission standards with implementation beginning in model year 2007. (See 65 FR 59896, October 6, 2000.) The NTE approach establishes an area (the ''NTE control area'') under the torque curve of an engine where emissions must not exceed a specified value for any of the regulated pollutants.[87] The NTE requirements would apply under engine operating conditions that could reasonably be expected to be seen in normal vehicle operation and use which occur during the conditions specified in the NTE test procedure. (See 40 CFR 86.1370.) This test procedure covers a specific range of engine operation and ambient operating conditions (*i.e.,* temperature, altitude, and humidity). The NTE control area, emissions standards, ambient conditions and test procedures for HDDEs are described in the regulations.

The NTE multiplier promulgated in the previous final rulemaking for HD diesel engines certified to the 2004 FTP standards is 1.25 × FTP standard (*e.g.,* 1.25 × 2.5g/bhp-hr NMHC+NO_X and 1.25 × 0.1 g/bhp-hr PM). We believe the NTE cap finalized today (1.5 × the Phase 2 FTP standards or FEL) allows sufficient headroom above the FTP standard to accommodate the technical challenges necessary to meet the NTE standard which must be met over a broader range of ambient conditions, a shorter time period, and a wider variety of operating conditions, than the FTP or the SET. While the 1.5 NTE multiplier we are finalizing is greater than what we proposed, in absolute terms the NTE requirement for Phase 2 engines is much smaller than for Phase 1 engines (*i.e.,* the magnitude of the cap in g/bhp-hr emissions), and the Phase 2 NTE cap will help ensure the emission reductions we expect from the Phase 2 standards will occur in-use. The NTE requirements have been modified from what we proposed based on our assessment of the emission performance of the exhaust emission control devices that will be used to meet the new FTP standards (*e.g.,* catalyzed particulate traps and NO_X adsorbers). Under the program finalized today, an NTE limit of 1.5 × the NO_X FEL would apply to 2007 and later model year engines certified with FELs less than 1.5 g/bhp-hr NO_X. As discussed throughout this notice, the stringent 2007 PM standard, 0.01 g/bhp-hr, can be met with the use of catalyzed particulate traps. Because of the very low particulate matter emissions which will be emitted by engines meeting the PM standard, this final rule also establishes a minimum PM NTE requirement for engines certified with FELs below 0.01 g/bhp-hr at 1.5 × the FTP standard, not the FEL. Based on our assessment of the expected exhaust emission control devices and their performance, the NTE standard of 1.5 × FTP standard is both technologically feasible and appropriate. A detailed discussion of the feasibility of the NTE requirements is contained in the RIA for this final rule.

Today's action allows the NTE deficiency provisions we recently finalized for 2007 HDDEs meeting the 2004 FTP standards to be used by HDDEs meeting the standards contained in today's final rule (See 40 CFR 86.007–11(a)(4)(iv) in the regulations, and 65 FR 59914 of the Phase 1 rule for a detailed discussion of the NTE deficiencies.). These deficiency provisions are similar to the deficiency provisions which currently apply to LD and HD on-board diagnostic systems. This will allow the Administrator to accept a HDDE as compliant with the NTE even though some specific requirements are not fully met. This provision will be available for manufacturers through 2013, though it will be more limited after 2009 as described below. In the Phase 1 rule, the Agency finalized deficiency provisions which were allowed through model year 2009. In this rule, it is appropriate to extend the availability of the NTE deficiency provisions beyond 2009. Given the nature of the phase-in requirements in this rule, manufacturers may be introducing new engine families certified to the Phase 2 NO_X and NMHC standards as late as model year 2010, and these families may need limited access to a NTE deficiency for a few years after their introduction. Therefore, we have extended the availability of deficiencies through model year 2013, but with one constraint. Given the considerable lead time available, we have limited the number of deficiencies to three per engine family for 2010 through 2013.

In addition, we have made a number of changes to the NTE requirements to address specific technical issues which arise from the application of high efficiency exhaust emission control devices to HDDEs. These provisions will only be summarized here. A detailed discussion is contained in the RIA and the RTC for this final rule. These changes include: engine start-up provisions; exhaust emission control device warm-up provisions; modifications of the NTE control zone; and adjustments to the NTE minimum emissions sample time.

Under this final rule, the NTE requirements will not apply during engine start-up conditions. EPA intended to include the provision excluding start-up provisions from the NTE requirements under the Phase 1 rulemaking, and it was discussed in the preamble for both the Phase 1 proposal and final rule. However, this provision was inadvertently left out of the regulations. We have corrected this in today's rule for both Phase 1 and Phase 2 engines. In addition, with the application of advanced exhaust emission control devices, an exhaust emission control device warm-up provision is a necessary criterion for the NTE. Specifically, until the exhaust gas temperature on the outlet side of the exhaust emission control device(s)

[87] Torque is a measure of rotational force. The torque curve for an engine is determined by an engine ''mapping'' procedure specified in the Code of Federal Regulations. The intent of the mapping procedure is to determine the maximum available torque at all engine speeds. The torque curve is merely a graphical representation of the maximum torque across all engine speeds.

EXHIBIT J

achieves 250 degrees Celsius, the engine is not subject to the NTE. Additional discussion of this provision is contained in the RIA.

We have made three changes to the NTE engine control zone. First, we have expanded the NTE engine control zone for engines certified to the new 0.01 g/bhp-hr PM standard. The NTE requirements as specified in the regulations for engines certified to the 2004 FTP standards provide specific ''PM carve-outs'' to the NTE control zone. These carve-outs define an area of the engine operating regime (speed and torque area) to which the NTE does not apply for PM emissions. (See 65 FR 59961.) The PM only carve-outs were specified because, under certain engine operating regions, the NTE requirements for PM could not be met with the technology projected to be used to meet the 2004 FTP standards. However, as discussed in the RIA, the advanced PM trap technology that will be used to meet the PM standard contained in today's final rule is very efficient at controlling PM emissions across the entire NTE control zone. Due to the high PM reduction capabilities of catalyzed PM traps, there is no need for the PM specific carve-outs. Therefore, we have eliminated the NTE PM carve-outs for Phase 2 engines. Second, we have added a provision which would allow a manufacturer to exclude defined regions of the NTE engine control zone from NTE compliance if the manufacturer could demonstrate that the engine, when installed in a specified vehicle(s), is not capable of operating in such regions. Finally, we have added a provision which would allow a manufacturer to petition the Agency to limit testing in a defined region of the NTE engine control zone during NTE testing. This optional provision would require the manufacturer to provide the Agency with in-use operation data which the manufacturer could use to define a single, continuous region of the NTE control zone. This single area of the control zone must be specified such that operation within the defined region accounts for 5 percent or less of the total in-use operation of the engine, based on the supplied data. Further, to protect against gaming by manufacturers, the defined region must generally be elliptical or rectangular in shape, and share a boundary with the NTE control zone. If approved by EPA, the regulations then disallow testing with sampling periods in which operation within the defined region constitutes more than 5.0 percent of the time-weighted operation within the sampling period.

We have also changed the minimum emissions sample time approach for NTE testing to address technical issues specific to the advanced exhaust emission control devices anticipated to be used to meet the NTE requirements. We proposed that the minimum emission sample time for the NTE was 30 seconds, which is what we recently finalized for engines certified to the Phase 1 standards. This short sample time was sufficient to ensure that momentary spikes in emissions (*e.g.,* such as could occur in a two or three second time frame) could not be isolated for determining compliance with the NTE (*e.g.,* an NTE test must be no shorter than a 30 second average). However, the use of highly efficient exhaust emission control devices complicates the minimum sample time requirements because of the potential for short-duration emission increases during regeneration events. We have adjusted the minimum sample time requirements to address this issue as follows (a detailed discussion of the need for this change is contained in the RIA). The regulations specify that the NTE sample time can be as short as 30 seconds provided no regeneration events occur within the sample period. However, if a regeneration event is included in the sample time, the sample time must include the period of time from the start of one regeneration event to the start of the next regeneration event, for each regeneration included in the sample. A regeneration event is determined by the engine manufacturer. This second provision regarding the minimum NTE sample time also cannot be shorter than 30 seconds. This sample time provision applies to any HDDE engine equipped with an exhaust emission control device which requires discreet regeneration events, regardless of the nature of the regeneration (*e.g.,* NO_X regeneration, desulfation).

c. Crankcase Emissions Control

Crankcase emissions are the pollutants that are emitted in the gases that are vented from an engine's crankcase. These gases are also referred to as ''blowby gases'' because they result from engine exhaust from the combustion chamber ''blowing by'' the piston rings into the crankcase. These gases are vented to prevent high pressures from occurring in the crankcase. Our emission standards have historically prohibited crankcase emissions from all highway engines except turbocharged heavy-duty diesel engines. The most common way to eliminate crankcase emissions has been to vent the blowby gases into the engine air intake system, so that the gases can be recombusted. We made the exception for turbocharged heavy-duty diesel engines in the past because of concerns about fouling that could occur by routing the diesel particulates (including engine oil) into the turbocharger and aftercooler. Our concerns are now alleviated by newly developed closed crankcase filtration systems, specifically designed for turbocharged heavy-duty diesel engines. These new systems (discussed more fully in Section III.E below and in Chapter III of the Final RIA) are already required for new on-highway diesel engines under the EURO III emission standards.

In today's action, we are eliminating the exception for turbocharged heavy-duty diesel engines starting in the 2007 model year. Manufacturers will be required to control crankcase emissions from these engines, preferably by routing them back to the engine intake or to the exhaust stream upstream of the exhaust emission control devices. However, in response to the manufacturers' comments, we are finalizing the crankcase control requirement to allow manufacturers to treat crankcase emissions from these engines the same as other exhaust emissions (*i.e.,* we provide a performance requirement and leave the design to the manufacturer). Under this allowance, manufacturers could potentially discharge some or all of the crankcase emissions to the atmosphere, but only if they were able to keep the combined total of the crankcase emissions and the other exhaust emissions below the applicable exhaust emission standards. They could do this by routing the crankcase gases into the exhaust stream downstream of the exhaust emission control devices, or by continuing the current practice of venting the gases to the engine compartment. But, they could take either of these approaches only if they make sure that the combined total of the crankcase emissions and the other exhaust emissions are below the applicable exhaust emission standards. Also, the manufacturer would have to ensure that the crankcase emissions were readily measurable during laboratory and in-use field testing.[88] Despite this allowance made at the request of commenters, given the low levels of today's final standards we believe that manufacturers will have to close the crankcases of all of their

[88] During laboratory testing, the crankcase emissions would need to be vented in a controlled manner so that they could be routed into the dilution tunnel to ensure their proper measurement and inclusion in the tested emission level.

EXHIBIT J

engines by either routing the crankcase emissions into the engine intake or by routing them into the exhaust upstream of the exhaust emission control devices.

d. On-Board Diagnostics (OBD)

The Phase 1 heavy-duty final rule put into place OBD requirements for heavy-duty diesel and gasoline engines weighing 14,000 pounds or less. (See 65 FR 59896, October 6, 2000.) In that rule, the OBD thresholds for malfunction identification are based on multiples of the applicable FTP emission standards to which the engine is certified. Given the structure of the 2004 FTP emission standards (2005 FTP emission standards for gasoline engines), which are combined NMHC+NO_X standards, the OBD thresholds are based on a multiple of the combined FTP standards. However, the structure of the 2007 FTP standards (2008 for gasoline engines) finalized today is not a combined NMHC+NO_X standard, but is instead a separate NO_X and a separate NMHC standard.

Therefore, today's final rule is revising the existing section of the regulations to link OBD thresholds to whatever the appropriate standards are whether they are the combined FTP standards or the new separate FTP standards finalized today. This is consistent with the intent of our OBD requirements since inception—that the OBD thresholds be based on the FTP standards to which the vehicle or engine has been certified.

We are also revising the phase-in for the OBD requirements finalized in the Phase 1 rule. (See 65 FR 59896.) In that rule, OBD systems were required to phase-in on a schedule of 60/80/100 percent beginning in the 2005 model year. At least one commenter claimed that the OBD phase-in may require multiple changes to OBD systems in consecutive years, because OBD systems are tied to the FTP standards to which they are certified.[89] We have decided, for diesel engine OBD systems, to revise the 60/80/100 percent phase-in to 50/50/100 percent beginning in the 2005 model year. This revised phase-in not only alleviates the commenter's concerns, but also makes the OBD phase-in consistent with the implementation of new emission standards.

In addition, we have decided, for gasoline engine OBD systems, to revise the 60/80/100 percent phase-in to 60/80/80/100 percent beginning in the 2005 model year.[90] As with the new diesel OBD phase-in, this gasoline engine OBD phase-in alleviates the commenter's concerns, and it also makes the gasoline OBD phase-in more consistent with the implementation of new emission standards while maximizing the percentage of gasoline engines designed to meet the OBD requirements.

We also received comments suggesting that we commit to making any necessary changes to the OBD requirements based on the outcome of future rulemaking efforts by the California Air Resources Board (ARB). While we cannot make any such commitment, nor do we believe the commenter truly would want us to commit to making changes solely because ARB made changes, we do intend to continue our normal practice of working closely with ARB and harmonizing our OBD requirements where appropriate. Of course, any changes to our OBD requirements could only be done via rulemaking.[91]

2. Heavy-Duty Vehicle Exhaust Emissions Standards [92]

a. FTP Standards

The emission standards being finalized today for heavy-duty gasoline vehicles are summarized in Table III.C–3. We have already required that all complete heavy-duty gasoline vehicles, whether for transporting passengers or for work, be chassis certified. (See 65 FR 59896, October 6, 2000.) Current federal regulations do not require that complete diesel vehicles over 8,500 pounds be chassis certified; instead, our regulations have traditionally required certification of their engines. Today's final rule allows, as an option, chassis certification of complete heavy-duty diesel vehicles under 14,000 pounds. This option is discussed in more detail later in this section.

The Tier 2 final rule created a new vehicle category called ''medium-duty passenger vehicles.'' [93] These vehicles, both gasoline and diesel, are required to meet requirements of the Tier 2 program, which carries with it a chassis certification requirement. As a result, diesel medium-duty passenger vehicles must certify using the chassis certification test procedure.[94] Today's heavy-duty vehicle based standards, or chassis standards, for 2008 and later model year heavy-duty gasoline vehicles would apply to the remaining complete gasoline vehicles under 14,000 pounds and those complete diesel vehicles under 14,000 pounds choosing the chassis certification option; these complete vehicles are typically used for commercial, non-passenger applications. The standards shown in Table III.C–3 are, we believe, comparable in stringency to the diesel and gasoline engine standards shown in Table III.C–1.

[89] EPA does not believe there would be any legal stability concern even if we had kept the OBD phase-in as finalized in the Phase 1 rule. However, EPA agrees with the commenter that the phase-in as finalized in the Phase 1 rule would have complicated compliance unnecessarily.

[90] For those manufacturers choosing compliance Options 1 or 2 as part of the Phase 1 program, the gasoline engine OBD phase-in will become 40/60/80/80/100 percent beginning in model year 2004. (See 65 FR 59896, October 6, 2000.)

[91] This comment also pertained to gasoline vehicle-based OBD systems. Our statements made here pertain to those requirements as well but are not repeated below in section III.2.c.

[92] As noted above, vehicle and engine standards apply to all vehicles and engines, even if they are alternative fueled vehicles and engines.

[93] Medium-duty passenger vehicles are defined as any complete vehicle between 8,500 and 10,000 pounds GVWR designed primarily for the transportation of persons. The definition specifically excludes any vehicle that (1) has a capacity of more than 12 persons total or, (2) is designed to accommodate more than 9 persons in seating rearward of the driver's seat or, (3) has a cargo box (*e.g.,* pick-up box or bed) of six feet or more in interior length. (See the Tier 2 final rulemaking, 65 FR 6698, February 10, 2000.)

[94] The Tier 2 final rule did make a limited allowance for engine certification of diesel MDPVS through the 2007 model year. The reader should refer to the Tier 2 final rule for details on that allowance. (See 65 FR 6750, February 10, 2000.)

EXHIBIT J

TABLE III.C–3.—FULL USEFUL LIFE HEAVY-DUTY VEHICLE EXHAUST EMISSIONS STANDARDS AND PHASE-INS FOR COMPLETE VEHICLES [a]

[Grams/mile]

Weight range (GVWR)		Standard (g/mi)	Phase-in by model year [b]	
			2008	2009
8,500 to 10,000 lbs	NO_X	0.2		
	NMHC	0.195		
	HCHO	0.032		
	PM	0.02		
10,001 to 14,000 lbs	NO_X	0.4	50%	100%
	NMHC	0.230		
	HCHO	0.040		
	PM	0.02		

[a] Does not include medium-duty passenger vehicles.
[b] Percentages represent percent of sales.

These NO_X standards represent a 78 percent reduction and a 60 percent reduction from the standards for 8,500–10,000 pound and 10,000–14,000 pound vehicles, respectively, finalized for the 2005 model year. The 2005 model year standards are equivalent to the California LEV–I NO_X standards of 0.9 g/mi and 1.0 g/mi, respectively. The NO_X standards shown in Table III.C–3 are consistent with the CARB LEV–II NO_X standards for low emission vehicles (LEVs) in each respective weight range. The NO_X standard is slightly higher for the 10,000 to 14,000 pound vehicles for several reasons: these vehicles are tested at a heavier payload; they generally have a larger frontal area which creates more drag on the engine and requires it to work harder; and their in-use duty cycle tends to be more severe. The increased weight results in using more fuel per mile than vehicles tested at lighter payloads; therefore, they tend to emit slightly more grams of pollutant per mile than lighter vehicles.[95]

The NMHC standards finalized today represent a 30 percent reduction from the 2005 standards for 8500–10,000 and 10,000–14,000 pound vehicles. The 2005 model year standards require such vehicles to meet NMHC standard levels of 0.28 g/mi and 0.33 g/mi, respectively (equal to the California LEV–I nonmethane organic gases (NMOG) standard levels). These new NMHC standards are consistent with the CARB LEV–II NMOG standards for LEVs in each respective weight class. The NMHC standard for 10,000–14,000 pound vehicles is higher than for 8,500–10,000 pound vehicles for the same reason as stated above for the higher NO_X standard for such vehicles.

The formaldehyde (HCHO) standards shown in Table III.C–3 are not the standards we proposed. The standards we are finalizing are equivalent to the California LEV–II LEV category standards. This approach is being taken to maintain consistency with the approach taken on NO_X and NMHC standards. Although we are not finalizing formaldehyde standards for engine certified systems, because all the exhaust emission standards for complete vehicles are consistent with the CARB LEV II standards, we believe it is appropriate to maintain the formaldehyde standard for gasoline vehicles. Formaldehyde is a hazardous air pollutant that is emitted by heavy-duty vehicles and other mobile sources, and we are finalizing these formaldehyde standards to prevent excessive formaldehyde emissions. These standards are especially important for any methanol-fueled vehicles because formaldehyde is chemically similar to methanol and is one of the primary byproducts of incomplete combustion of methanol. Formaldehyde is also emitted by vehicles using petroleum fuels (i.e., gasoline or diesel fuel), but to a lesser degree than is typically emitted by methanol-fueled vehicles. We expect that petroleum-fueled vehicles able to meet the NMHC standards should comply with the formaldehyde standards with large compliance margins. Based upon our analysis of the similar Tier 2 standards for passenger vehicles, we believe that formaldehyde emissions from petroleum-fueled vehicles when complying with the new PM, NMHC and NO_X standards should be as much as 90 percent below the standards.[96] Thus, to reduce testing costs, we are finalizing a provision that permits manufacturers of petroleum-fueled vehicles to demonstrate compliance with the formaldehyde standards based on engineering analysis. This provision requires manufacturers to make a demonstration in their certification application that vehicles having similar size and emission control technology have been shown to exhibit compliance with the applicable formaldehyde standard for their full useful life. This demonstration is expected to be similar to that required to demonstrate compliance with the Tier 2 formaldehyde standards.

The PM standard is 80 percent lower than the CARB LEV–II LEV category PM standard of 0.12 g/mi, which actually applies only to diesel vehicles. Note that the PM standard shown in Table III.C–3 represents not only a stringent PM level, but a new standard for federal HDVs where none existed before. Both the California LEV II program for heavy-duty diesel vehicles and the federal Tier 2 standards for over 8,500 pound gasoline and diesel vehicles designed for transporting passengers contain PM standards. The PM standard finalized today is consistent with the light-duty Tier 2 bins 7 and 8 level of 0.02 g/mi.

The timing for our final gasoline vehicle standards differs from what we had proposed. Our proposal had no phase-in, requiring 100 percent compliance in the 2007 model year. However, since the proposal was published, we have set new standards for heavy-duty gasoline complete vehicles that take effect in the 2005 model year. Therefore, the three year stability requirement of the CAA requires that today's new standards not apply until the 2008 model year at the earliest. Further, based on comments

[95] Engine standards, in contrast, are stated in terms of grams per unit of work rather than grams per mile. Therefore, engine emission standards need not increase with weight because heavier engines do not necessarily emit more per unit of work produced. In contrast, heavier vehicles, due to their greater mass, tend to emit more per mile due to the increased load placed on the engine which requires the engine to do more work to travel each mile.

[96] See the Tier 2 Response to Comments document contained in Air Docket A–97–10.

EXHIBIT J

received, we believe that a phase-in should be provided. The phase-in will allow manufacturers to implement improved gasoline control technologies on their heavy-duty gasoline vehicles in the same timeframe as they implement those technologies on their Tier 2 medium-duty passenger vehicles (MDPV). The MDPVs generally use the same engines and emission control systems as do the heavy-duty versions of those vehicles. MDPVs must comply with our light-duty Tier 2 program at 50 percent beginning in the 2008 model year and then 100 percent in the 2009 model year. As a result of this MDPV phase-in, and the stability requirements of the CAA, and because we believe it provides the greatest emission control considering costs, we are finalizing a gasoline phase-in of 50/100 percent beginning in the 2008 model year. Commenters suggested a 40/80/100 percent phase-in beginning in the 2008 model year, but we believe that a 50/100 percent phase-in allows appropriate leadtime and synergy with the MDPV requirements of our Tier 2 program. It is worth clarifying that this phase-in excludes California complete heavy-duty vehicles, which are already required to be certified to the California emission standards. It also excludes vehicles sold in any state that has adopted California emission standards for complete heavy-duty vehicles. It would be inappropriate to allow manufacturers to ''double-count'' the vehicles by allowing them to count those vehicles both as part of their compliance with this phase-in and for compliance with California requirements. We would handle heavy-duty engines similarly if California were to adopt different emission standards than those being established by this rule.

We are also finalizing provisions that would encourage manufacturers to introduce clean technology earlier than required in return for greater flexibility during the later years of our phase-in. These optional early incentive provisions are analogous to those included in our light-duty Tier 2 rule and are discussed in more detail in section III.D.

As we have done for diesel and gasoline engines, we have revised our Averaging, Banking, and Trading program for gasoline vehicles and engines to increase flexibility as discussed further in section VI. The reader should refer to that section for more details. Note that the gasoline vehicle phase-in schedule is the same as but separate from the gasoline engine phase-in schedule discussed above. For a discussion of why we believe these standards are technologically feasible in the time frame required, refer to section III.E below, and for a more detailed discussion refer to the RIA contained in the docket.

We are also allowing complete heavy-duty diesel vehicles under 14,000 pounds to certify to the heavy-duty vehicle standards. The issue of chassis certification of diesels was raised as part of the Phase 1 rule. At that time, manufacturers expressed little interest in such a provision. Because the heavy-duty diesel industry is largely not a vertically-integrated industry, in that one company makes the engine and another makes the vehicle, chassis certification is not an immediately attractive or practical option for diesel engine manufacturers. Nonetheless, some manufacturers have begun to express interest in diesel chassis certification.[97] Also, the California Air Resources Board allows complete diesel vehicles to chassis certify. We like the idea of diesel chassis certification because it allows us to more easily evaluate such vehicles in-use. A chassis certified diesel could be acquired easily by EPA and tested in its vehicle configuration without the need to remove the engine for an engine test.

Therefore, while we fully expect that manufacturers will continue to certify the engines intended for complete diesel vehicles to the engine standards, we will allow the option to chassis certify such vehicles. Any chassis-certified complete diesel vehicles must meet the applicable Phase 2 emission standards for complete vehicles (i.e., this option is not available to diesels certified to the Phase 1 standards). In addition, while complete diesel vehicles would count against the phase-in requirements for diesel engines, they would not be allowed in the Averaging, Banking, and Trading program. Therefore, a chassis-certified diesel vehicle can neither use nor earn ABT credits, but counts as part of the 50 percent phase-in. Further, complete diesels choosing the chassis certification option would be required to comply with our federal OBD vehicle-based requirements for monitoring of exhaust emission control devices, even if choosing the option to demonstrate OBD compliance using the California OBD II requirements. Lastly, diesel vehicles choosing this option would be certified under subpart S which applies to chassis certified complete vehicles, but the evaporative emissions provisions of that subpart would not apply for diesel vehicles.

[97] See memorandum from Todd Sherwood to Air Docket A–99–06, dated December 6, 2000, Item #IV–E–47.

b. Supplemental Federal Test Procedure

We did not propose new supplemental FTP (SFTP) standards for heavy-duty vehicles. The SFTP standards control off-cycle emissions in a manner somewhat analogous to the NTE requirements for engines. We believe that the SFTP standards are an important part of our light-duty program just as we believe the NTE requirements will be an important part of our heavy-duty diesel engine program. Although we did not propose SFTP standards for heavy-duty vehicles, we stated an intention to do so via a separate rulemaking. We requested comment on such an approach, and on appropriate SFTP levels for heavy-duty vehicles along with supporting data.

We received unanimous support from industry commenters to address SFTP standards for heavy-duty vehicles in a separate rulemaking. In our Tier 2 final rule, we stated that we are currently contemplating a new SFTP rulemaking that would consider ''Tier 2'' SFTP standards for all Tier 2 vehicles, including MDPVs. California is also interested in developing more stringent SFTP standards within the context of their LEV II program and we are coordinating with California on these new SFTP standards. Given our concern over ''off cycle'' emissions, we believe it is appropriate that SFTP standards apply to all chassis certified vehicles, heavy-duty and light-duty. As part of the SFTP rule being contemplated, we expect to examine not only those issues stated in the Tier 2 rule (e.g., the SFTP test cycles and different SFTP standards for different vehicles sizes) but also the issue of heavy-duty SFTP standards.

c. On-Board Diagnostics (OBD)

The Phase 1 heavy-duty rule finalized OBD requirements for heavy-duty diesel engines, heavy-duty gasoline engines, and heavy-duty complete vehicles weighing 14,000 pounds or less. (See 65 FR 59896, October 6, 2000.) In that rulemaking, the final regulatory language stated the OBD catalyst thresholds for complete vehicles as multiples of a combined NMHC+NO_X emission standard. However, the emission standards for complete vehicles are not combined, as are the engine standards in that final rule. Therefore, the OBD catalyst thresholds for complete vehicles were not stated properly in the applicable sections of the regulations.

Today's final rule corrects that regulatory error by revising the appropriate regulatory language to link the OBD thresholds to a separate, rather than combined, set of FTP exhaust

EXHIBIT J

emission standards. This is consistent with the Phase 1 heavy-duty proposal which correctly linked the proposed OBD thresholds to the separate FTP exhaust emission standards. (See 64 FR 58472, October 29, 1999.) It is also consistent with the preamble to the Phase 1 final rule, which stated the catalyst monitor threshold correctly. This change makes the OBD thresholds for complete vehicle certifications consistent with the structure used since implementation of the federal OBD requirements. (See 58 FR 9468, February 19, 1993.)

Consistent with the changes already discussed in section III.C.1, we are also revising the phase-in for complete vehicle OBD requirements finalized in the Phase 1 rule. (See 65 FR 59896.) In that rule, OBD systems were required to phase-in on a schedule of 60/80/100 percent beginning in the 2005 model year. At least one commenter pointed out that the OBD phase-in may require multiple changes to OBD systems in consecutive years because OBD systems are tied to the FTP standards to which they are certified. We have decided, for gasoline vehicle OBD systems, to revise the 60/80/100 percent phase-in to 60/80/80/100 percent beginning in the 2005 model year.[98] This revised OBD phase-in alleviates the commenter's concerns, and it makes the gasoline OBD phase-in more consistent with the implementation of new emission standards while maximizing the percentage of gasoline vehicles designed to meet the OBD requirements.

3. Heavy-Duty Evaporative Emissions Standards

We are finalizing new evaporative emission standards for heavy-duty vehicles and engines. The new standards are shown in Table III.C–4. These standards will apply to heavy-duty gasoline-fueled vehicles and engines, and methanol-fueled heavy-duty vehicles and engines. Consistent with existing standards, the standard for the two day diurnal plus hot soak test sequence would not apply to liquid petroleum gas (LPG) fueled and natural gas fueled HDVs.

TABLE III.C–4.—NEW HEAVY-DUTY EVAPORATIVE EMISSIONS STANDARDS [a]

[Grams per test]

Category	3 day diurnal + hot soak	Supplemental 2 day diurnal + hot soak [b]
8,500–14,000 lbs	1.4	1.75
>14,000 lbs	1.9	2.3

[a] To be implemented on the same schedule as the gasoline engine and vehicle exhaust emission standards shown in Tables III.C–1 and III.C–3. These new standards do not apply to medium-duty passenger vehicles, and do not apply to diesel fueled vehicles and engines.

[b] Does not apply to LPG or natural gas fueled HDVs.

These new standards represent more than a 50 percent reduction in the numerical standards as they exist today. The Phase 1 heavy-duty rule made no changes to the numerical value of the standard, but it did put into place new evaporative emission test procedures for heavy-duty complete gasoline vehicles.[99] (See 65 FR 59896, October 6, 2000.) For establishing evaporative emission levels from complete heavy-duty vehicles, the standards shown in Table III.C–4 presume the test procedures required in the Phase 1 heavy-duty rule.

The new standards for 8,500 to 14,000 pound vehicles are consistent with the Tier 2 standards for medium-duty passenger vehicles (MDPV). MDPVs are of consistent size and have essentially identical evaporative emission control systems as the remaining work-oriented HDVs in the 8,500 to 10,000 pound weight range. Therefore, the evaporative emission standards should be equivalent. We are requiring those same standards for the 10,000 to 14,000 pound HDVs because, historically, the evaporative emission standards have been consistent throughout the 8,500 to 14,000 pound weight range. We believe that the HDVs in the 10,000 to 14,000 pound range are essentially equivalent in evaporative emission control system design as the lighter HDVs; therefore, continuing this historical approach is appropriate.

We are finalizing slightly higher evaporative emission standards for the over 14,000 pound HDVs because of their slightly larger fuel tanks and for non-fuel emissions related to larger vehicle sizes. This is consistent with past evaporative emission standards. The levels chosen for the over 14,000 pound HDVs maintains the same ratio relative to the 8,500 to 14,000 pound HDVs as exists with current evaporative standards. To clarify, the current standards for the 3 day diurnal test are 3 and 4 grams/test for the 8,500 to 14,000 and the over 14,000 pound categories, respectively. The ratio of 3:4 is maintained for the new 2008 standards, 1.4:1.9.

The new standard levels are slightly higher than the California LEV-II standard levels. The California standard levels are 1.0 and 1.25 for the 3-day and the 2-day tests, respectively. However, federal vehicles are certified using the higher-volatility federal test fuel.[100] Arguably, the federal and California evaporative emission standards are equivalent in stringency despite the difference in standard levels. We believe that our standards are appropriate for federal heavy-duty vehicles.

We are requiring that the new evaporative emission standards be implemented on the same schedule as the gasoline engine and vehicle exhaust standards shown in Tables III.C–1 and III.C–3. This will allow manufacturers to plan any needed changes to new vehicles at the same time, although it is not necessary that the exhaust and evaporative standards be phased-in on the same vehicles and engines. Also, we are finalizing the revised durability provisions finalized in the Tier 2 rulemaking, which require durability demonstration using fuel containing at least 10 percent alcohol. Alcohol can break down the materials used in evaporative emission control systems. Therefore, a worst case durability demonstration would include a worst case alcohol level in the fuel (10 percent) because in some areas of the country there is widespread use of alcohol fuels.

D. Incentives for Early Introduction of Clean Engines and Vehicles

In our proposal, we requested comment on alternative phase-in approaches that could provide attractive implementation options to

[98] For those manufacturers choosing compliance Options 1 or 2 as part of the Phase 1 program, the gasoline vehicle OBD phase-in will become 40/60/80/80/100 percent beginning in model year 2004. (See 65 FR 59896.)

[99] The test procedure changes codify a commonly approved waiver allowing heavy-duty gasoline vehicles to use the light-duty driving cycle for demonstrating evaporative emission compliance. The urban dynamometer driving schedule (UDDS) used for heavy-duty vehicles is somewhat shorter than that used for light-duty vehicles, both in terms of mileage covered and minutes driven. This results in considerably less time for canister purge under the heavy-duty procedure than under the light-duty procedure. We recognize this discrepancy and have routinely provided waivers under the enhanced evaporative program that allow the use of the light-duty procedures for heavy-duty certification testing. This is consistent with CARB's treatment of equivalent vehicles.

[100] The federal test fuel specification for fuel volatility, the Reid Vapor Pressure, is 8.7 to 9.2 psi. The California test fuel specification is 6.7 to 7.0 psi.

EXHIBIT J

manufacturers without compromising air quality. We requested comment on a ''declining standard'' approach and a ''cumulative phase-in'' approach. We received only limited comment on those approaches with no commenters expressing particularly strong support for them. We did receive numerous comments suggesting that we provide some form of incentive for manufacturers to introduce clean technology engines earlier than required by the base program. We are finalizing the approach discussed here as an incentive for manufacturers to introduce clean diesel engines earlier than the 2007 model year (or the 2008 model year for gasoline engines and vehicles).

In our Tier 2 rule, we stated our belief that providing inducements to manufacturers to certify vehicles early to very low levels is appropriate. We believe that such inducements may help pave the way for greater and/or more cost effective emission reductions from future vehicles. We believe the program discussed here provides a strong incentive for manufacturers to maximize their development and introduction of the best available vehicle and engine emission control technology. This, in turn, provides a stepping stone to the broader introduction of this technology soon thereafter. Early production of cleaner vehicles enhances the early benefits of our program. If a manufacturer can be induced to certify to the new standards by the promise of reasonable extra credits, the benefits of that decision to the program may last for many years.

The incentive program finalized today is analogous to the provisions set forth in the final Tier 2 rule. We are finalizing provisions that permit manufacturers to take credit for diesel engines certified to this rule's final standards prior to the 2007 model year (prior to the 2008 model year for gasoline engines or vehicles) in exchange for making fewer diesel engines certified to these standards in or after the 2007 model year (2008 for gasoline engines or vehicles). In other words, a clean engine sold earlier than required displaces the requirement to sell a similar engine later. Note that the emission standards must be met to earn the early introduction credit. That is, emission credits earned under averaging, banking, and trading cannot be used to demonstrate compliance. Therefore, the early introduction engine credit is an alternative to the ABT program in that any early engines or vehicles can earn either the engine credit or the ABT emission credit, but not both. The purpose of the incentive is to encourage introduction of clean technology engines earlier than required in exchange for added flexibility during the phase-in years.

Any early engine credits earned for a diesel-fueled engine would, of course, be predicated on the assurance by the manufacturer that the engine would indeed be fueled with low sulfur diesel fuel in the marketplace. We expect this would occur through selling such engines into fleet applications, such as city buses, school buses, or any such well-managed centrally-fueled fleet. For this reason, we believe that any engines sold within this early incentive program would be sold primarily in urban areas where more centrally-fueled fleets exist. Because of the difficulty associated with low sulfur diesel fuel availability prior to mid-2006, we believe it is necessary and appropriate to provide a greater incentive for early introduction of clean diesel technology. Therefore, we will count one early diesel engine as 1.5 diesel engines later. This extra early credit for diesel engines means that fewer clean diesel engines than otherwise would be required may enter the market during the years 2007 and later. But, more importantly, it means that emission reductions would be realized earlier than under our base program. We believe that providing incentives for early emission reductions is a worthwhile goal for this program. Therefore, we are finalizing these provisions for manufacturers willing to make the early investment in cleaner engines. For gasoline engines and vehicles, the early engine credit will be a one-for-one credit because the gasoline needed by the engine or vehicle will be readily available.

We are providing this early introduction credit to diesel engines that meet all of today's final standards (0.20 g/bhp-hr NO_X, 0.14 g/bhp-hr NMHC, and 0.01 g/bhp-hr PM). We are also providing this early introduction credit to diesel engines that pull-ahead compliance with only the 0.01 g/bhp-hr PM standard. However, a PM-only early engine can offset only PM compliant engines during the phase-in years, not NO_X, NMHC, and PM compliant engines.

An important aspect of the early incentive provision is that it must be done on an engine or vehicle count basis. That is, a diesel engine meeting new standards early counts as 1.5 such diesel engines later and a gasoline engine or vehicle early counts as one gasoline engine or vehicle later. This contrasts with a provision done on an engine percentage basis which would count one percent of diesel engines early as 1.5 percent of diesel engines later. Basing the incentive on an engine count will alleviate any possible influence of fluctuations in engine and vehicle sales in different model years.

Another important aspect of this program is that it is limited to engines sold prior to the 2007 model year (2008 for gasoline). In other words, diesel engines sold in the 2007 through 2009 model years that exceed the required 50 percent phase-in will not be considered ''early'' introduction engines and will, therefore, receive no early introduction credit. The same is true for gasoline engines and vehicles sold in the 2008 model year. However, such engines and vehicles will still be able to generate ABT credits. Note that early gasoline vehicles can count for later gasoline vehicles, and early gasoline engines can count for later gasoline engines, but early gasoline vehicles cannot be traded for later gasoline engines and vice versa.

Table III.D–1 shows an example for a diesel engine manufacturer and how it might use this incentive provision on an assumed fleet of 100 engine sales growing at one percent per year beginning in the 2004 model year.

TABLE III.D–1.—EXAMPLE ENGINE INTRODUCTION UNDER OUR EARLY INCENTIVE PROGRAM

	2004	2005	2006	2007	2008	2009	2010
Total Sales	100	101	102	103	104	105	106
Clean Engines under Base program	0	0	0	52	52	53	106
Clean Engines under Incentive Program	4	4	4	46	46	47	106

EXHIBIT J

The four engines sold early in each of model years 2004 through 2006 generate a total credit of 18 engines (4×3×1.5=18). This allows the manufacturer to reduce its compliant engine count in each of model years 2007 through 2009 by six engines (18/3=6). This helps the manufacturer by reducing total costs through requiring fewer total engines at the low-emitting, clean engine level. But, more importantly, it introduces clean technology engines early and, by 2010 in this example, generates from four to six years of emission reductions that otherwise would not have occurred.

As further incentive to introduce clean engines and vehicles early, we are also finalizing a provision that would give manufacturers an early introduction credit equal to two engines during the phase-in years. This ''Blue Sky'' incentive would apply for diesel engines meeting one-half of today's final NO_X standard while also meeting the NMHC and PM standards. For gasoline engines, the same early introduction double engine credit would be available to engines sold prior to 2008 and meeting one-half the NO_X standard while also meeting the NMHC, PM, and evaporative emission standards. For gasoline vehicles, the double engine credit would be available to those vehicles certified early to the California SULEV levels and today's PM and evaporative emission standards.[101] Due to the extremely low emission levels to which these Blue Sky series engines and vehicles would need to certify, we believe that the double engine count credit is appropriate. Table III.D–2 shows the emission levels that would be required prior to the 2007 model year for diesel engines and the 2008 model year for gasoline vehicles and engines to earn any early introduction engine credits.

TABLE III.D–2.—EMISSION LEVELS AND CREDITS AVAILABLE FOR EARLY INTRODUCTION ENGINES

Category	Must meet [a]	Early engine credit [b]
Early Diesel PM-only [c]	Phase 2 PM & Phase 1 NO_X + NMHC	1.5-to-1
Early Diesel Engine [c]	All Phase 2 Standards	1.5-to-1
Early Gasoline Engine or Vehicle—Exhaust	Phase 2 Exhaust Standards	1-to-1
Early Gasoline Engine or Vehicle—Evap	Phase 2 Evaporative Standards	1-to-1
Blue Sky Series Diesel [c] or Gasoline Engine	0.10 g/bhp-hr NO_X & All other Phase 2 Standards [d]	2-to-1
Blue Sky Series Gasoline Vehicle	0.02 g/mi PM & California SULEV Level Standards [d]	2-to-1

[a] Phase 1 refers to standards required by 65 FR 59896, October 6, 2000; Phase 2 refers to today's final standards.
[b] Engine count credits must be earned prior to the phase-in years of 2007 for diesel and 2008 for gasoline.
[c] Early diesel engines must also meet the Phase 2 crankcase emissions requirements.
[d] For gasoline engines and vehicles, these must also meet the Phase 2 evaporative emission standards.

Alternative fueled vehicles and engines can also play a significant role in this incentive program. Any alternative fueled diesel-cycle engine certified to today's final standards prior to the 2007 model year can generate a 1.5 diesel-cycle engine count credit during the diesel phase-in years. Likewise, any alternative fueled Otto-cycle engine certified to today's final standards prior to the 2008 model year can generate one Otto-cycle engine count credit. Many commenters suggested that EPA should do more than was put forward in our proposal to encourage the introduction of alternative fuel technologies. To the extent that alternative fueled vehicles and engines are cleaner than diesels and gasolines, they may have an advantage within today's program. We believe that this program and its structure provides significant incentives for manufacturers to introduce alternative fueled vehicles and engines.

One final aspect of the incentive program is its interaction with our Tier 2 program. The Tier 2 final rule allows some MDPVs to be equipped with engine-certified diesel engines through the 2007 model year. Any such engines are required to comply with the diesel engine standards that apply during the given model year. Given that they are certified as heavy-duty diesel engines, any such engines that meet today's final diesel standards prior to the 2007 model year would be allowed within today's incentive program provided they in no way generate any emission or engine count credits within the Tier 2 program. Further, any MDPVs, whether gasoline or diesel, certified on a chassis dynamometer and being counted in any way as part of the Tier 2 program, cannot be used as part of today's incentive program because they are not considered heavy-duty vehicles.

E. Feasibility of the New Engine and Vehicle Standards

For more detail on the information and analyses supporting our assessment of the technological feasibility of today's standards, please refer to the Final RIA in the docket for this rule. The following discussion summarizes the more detailed discussion found in the Final RIA and in the Summary and Analysis of Comments document.

1. Feasibility of Stringent Standards for Heavy-Duty Diesel

The designers and manufacturers of diesel engines have made substantial progress over the last 20 years reducing NO_X emissions by 60 percent and PM emissions by almost 90 percent through better engine design. We believe that, in response to our Phase 1 heavy-duty rule, industry will have implemented all promising engine-based emission reduction technologies in order to meet the 2.5 g/bhp-hr NO_X+NMHC standard and the 0.1 g/bhp-hr PM standard. To get the substantial PM and NO_X reductions from diesel engines needed to solve the air quality problems identified in section II, we believe a new technology solution will be required. That solution is the application of high efficiency exhaust emission control technologies (catalysts) to diesel engines, analogous to the application of catalyst technologies to passenger cars in the 1970s. These high efficiency catalyst technologies, enabled by the use of diesel fuel with sulfur content at or below 15 ppm, can reduce NO_X and PM emissions by more than 90 percent. This dramatic reduction in emissions will

[101] The California SULEV levels are, for 8,500 to 10,000 pound vehicles, 0.1 g/mi NO_X, 0.100 g/mi NMOG, 0.008 g/mi HCMO, and 0.06 g/mi PM; and for 10,000 to 14,000 pound vehicles, 0.2 g/mi NO_X, 0.117 g/mi NMOG, 0.010 g/mi HCHO, and 0.06 g/mi PM. With the exception of the PM standards, these emission levels are half or roughly half of this rule's final gasoline vehicle standards.

EXHIBIT J

enable diesel powered vehicles to reach emission levels well below today's gasoline emission levels. As detailed in the sections below, these technologies are rapidly being developed and will be available for application to diesel powered vehicles by, or even before, the 2007 model year provided the low sulfur diesel fuel required today is widely available.

a. Meeting the PM Standard

Diesel PM consists of three primary constituents: Unburned carbon particles (soot), which make up the largest portion of the total PM; the soluble organic fraction (SOF), which consists of unburned hydrocarbons that have condensed into liquid droplets or have condensed onto unburned carbon particles; and sulfates, which result from oxidation of fuel and oil derived sulfur in the engine's exhaust. Several exhaust emission control devices have been developed to control harmful diesel PM constituents—the diesel oxidation catalyst (DOC), and the many forms of diesel particulate filters, sometimes called PM traps. DOCs have been shown to be durable in use, but they effectively control only the SOF portion of the total PM which, on a modern diesel engine constitutes only 10 to 30 percent of the total PM. Therefore, the DOC on its own would only offer a modest reduction in PM emissions, and would not be able to meet the PM standard set here.

Diesel particulate filters were first investigated some twenty years ago as a means to capture solid particles in diesel exhaust. A variety of approaches to this technology have been developed most of which provide excellent mechanical filtration of the solid particles that make up the bulk of diesel PM (60 to 80 percent). The collected PM, mostly carbon particles, must then be ''burned off'' of the filter before the filter becomes plugged. This burning off of collected PM (oxidation of the stored PM, releasing CO_2) is referred to as ''regeneration,'' and can occur either:

- On a periodic basis by using base metal catalysts (including fuel-borne base metal catalysts) or an active regeneration system such as an electrical heater, a fuel burner, or a microwave heater; or,
- On a continuous basis by using precious metal catalysts.

Diesel particulate traps that regenerate on a periodic basis (referred to here as either uncatalyzed or base metal catalytic PM traps) demonstrated high PM trapping efficiencies many years ago, but the level of the applicable PM standard was such that it could be met through less costly ''in-cylinder'' control techniques. Un-catalyzed diesel particulate filters will not be able to meet the 0.01 g/bhp-hr PM standard finalized today as they are only moderately effective at controlling the SOF fraction of the particulate. In addition, they require active regeneration technology which must be engaged frequently making the systems expensive to operate (increasing fuel consumption) and less reliable.

We believe the kind of PM trap that would be able to meet the PM standard in a reliable, durable, cost effective manner, and the type of trap that will prove to the be the industry's technology of choice, is one capable of regenerating on an essentially continuous basis. In addition these PM traps will be able to achieve very low PM emissions because:

- They are highly efficient at controlling the solid carbon portion of PM;
- Unlike uncatalyzed filters, they are highly efficient at oxidizing the SOF of diesel PM;
- They employ precious metals to produce conditions that reduce the temperature at which regeneration occurs, thereby allowing for passive regeneration under normal operating conditions typical of a diesel engine; [102]
- Because they regenerate continuously, they have lower average backpressure thereby reducing potential fuel economy impacts; and,
- Because of their passive regeneration characteristics, they need no extra burners or heaters like what would be required by an active regeneration system, thereby reducing potential failures and fuel economy impacts.

These catalyzed PM traps are able to provide in excess of 90 percent control of diesel PM when operated on diesel fuel with sulfur levels at or below 15 ppm. However, as discussed in detail in the RIA, the catalyzed PM trap cannot regenerate properly with current fuel sulfur levels, as such sulfur levels poison the catalytic function of the PM trap inhibiting the necessary NO to NO_2 reaction to the point of stopping trap regeneration.[103] Also, because SO_2 is so readily oxidized to SO_3, the 0.01 g/bhp-hr PM standard cannot be achieved with fuel sulfur levels above 15 ppm because of the resultant increase in sulfate PM emissions (''sulfate make'').[104]

More than one exhaust emission control manufacturer is known to have or be developing these precious metal catalyzed, passively regenerating PM traps and to have them in broad field test programs in areas where low sulfur diesel fuel is currently available. In field trials since 1994, they have demonstrated highly efficient PM control and good durability with some units accumulating in excess of 360,000 miles of field use.[105] The experience gained in these field tests also helps to clarify the need for low sulfur diesel fuel. In Sweden, where below 10 ppm diesel fuel sulfur is readily available, more than 3,000 catalyzed diesel particulate filters have been introduced into retrofit applications without a single failure. These retrofit applications include intercity trains, airport buses, mail trucks, city buses and garbage trucks.[106] The field experience in areas where sulfur is capped at 50 ppm has been less definitive. In regions without extended periods of cold ambient conditions, such as the United Kingdom, field tests on 50 ppm sulfur cap fuel have been positive, matching the durability at 10 ppm, but would be unable to meet a 0.01 g/bhp-hr PM standard due to a substantial increase in sulfate PM. However, field tests on 50 ppm sulfur fuel in Finland where colder winter conditions are often encountered (similar to northern parts of the United States) have experienced a failure rate of 10 percent, due to trap plugging. This 10 percent failure rate has been attributed to insufficient trap regeneration due to fuel sulfur in combination with low ambient temperatures.[107] Other possible reasons for the high failure rate in Finland when contrasted with the Swedish experience appear to be unlikely. The Finnish and Swedish fleets were substantially similar, with both fleets consisting of transit buses powered by Volvo and Scania engines in the 10 to 11 liter range. Further, the buses were operated in city areas and none of the vehicles were operated in northern extremes such as north of the

[102] For PM trap regeneration without precious metals, exhaust metals, exhaust temperatures in excess of 650°C must be obtained. At such high temperatures, carbon will burn (oxidize to CO_2) provided sufficient oxygen is present. Although the largest heavy-duty diesels may achieve exhaust temperatures of 650°C under some operating conditions, smaller diesel engines, particularly light-duty and light heavy-duty diesel engines, will rarely achieve such high temperatures. For example, exhaust temperatures on the HDE Federal Test Procedure cycle typically range from 100°C to 450°C. Precious metal catalyzed traps use platinum to oxidize NO in the exhaust to No_2, which is capable of oxidizing carbon at temperatures as low as 250°C to 300°C.

[103] Cooper and Thoss, Johnson Matthey, SAE 890404.

[104] See the RIA for more detail on the relationship of fuel sulfur to sulfate make.

[105] Allansson, *et al.* SAE 2000–01–0480.

[106] Allansson, *et al.* SAE 2000–01–0480.

[107] Letter from Dr. Barry Cooper to Don Kopinski, US EPA, Air Docket A–99–06.

EXHIBIT J

Arctic Circle.[108] Given that the fleets in Sweden and Finland were substantially similar, and given that ambient conditions in Sweden are expected to be similar to those in Finland, we believe that the increased failure rates noted here are due to the higher fuel sulfur level in a 50 ppm cap fuel versus a 10 ppm cap fuel.[109] Testing on an even higher fuel sulfur level of 200 ppm was conducted in Denmark on a fleet of 9 vehicles. In less than six months all of the vehicles in the Danish fleet had failed due to trap plugging.[110] We believe that this real world testing clearly indicates that increasing diesel fuel sulfur levels limit trap regeneration, leading to plugging of the PM trap even at fuel sulfur levels as low as 50 ppm.

From these results, we can further conclude that lighter applications (such as large pick-up trucks and other light heavy-duty applications), having lower exhaust temperatures than heavier applications, may experience similar failure rates even in more temperate climates and would, therefore, need lower sulfur fuel even in the United Kingdom. These results are understood to be due to the effect of sulfur on the trap's ability to create sufficient NO_2 to carry out proper trap regeneration. Without the NO_2, the trap continues to trap the PM at high efficiency, but it is unable to oxidize, or regenerate, the trapped PM. The possible result is a plugged trap. This vulnerability of the catalyzed diesel particulate filter due to sulfur in the fuel and the consequences of trap plugging are discussed fully in section III.F and the RIA.

Several commenters raised concerns with our use of the extensive fleet experience in Europe, to draw conclusions about the necessary sulfur reductions required in order to ensure PM trap durability. Their concerns focused generally around the fact that these fleets were made up of retrofit applications, and that the nature of the fleet operation did not represent a controlled experiment (ideally all things would have been equal except for the fuel sulfur level). While we acknowledge these limitations in the data, we believe they still provide reasonable evidence of the need for low sulfur diesel fuel. The diversity of applications, climates, fuel properties, NO_X emission levels, and sulfur levels help to show the relative robustness of the technology. Further, we believe the PM trap manufacturer's analysis of the failure mode (*i.e.,* that cold ambient conditions coupled with diminished NO to NO_2 conversion due to sulfur led to the failures that were experienced) is the most likely explanation of the observed phenomena. Sulfur in diesel fuel is known to inhibit the oxidation of NO to NO_2 (as described in section III.F) leading to reduced ability to regenerate the PM filter, especially under low ambient conditions. For our detailed response to comments surrounding catalyzed diesel particulate filter durability refer to the RTC document.

Several progressive refineries have begun to produce diesel fuel with sulfur content less than 15 ppm for limited markets in the United States. The availability of this low sulfur diesel fuel makes it possible to introduce diesel particulate filters into these limited markets today. International Truck and Engine Corporation (''International'') has announced its intent to commercialize its Green Diesel Engine Technology™ in 2001 coupled with less than 15 ppm sulfur fuel to achieve our proposed MY 2007 NMHC and PM emissions standards six years in advance of the requirement. International's ability to bring a catalyzed diesel particulate filter technology to commercialization in such a short period highlights the advanced state of this technology.[111]

Modern catalyzed PM traps have been shown to be very effective at reducing PM mass. In addition, recent data show that they are also very effective at reducing the overall number of emitted particles when operated on low sulfur fuel. Hawker, *et. al.,* found that a modern catalyzed PM trap reduced particle count by over 95 percent, including some of the smallest measurable particles (<50 nm), at most of the tested conditions. The lowest observed efficiency in reducing particle number was 86 percent. No generation of particles by the PM trap was observed under any tested conditions.[112] Kittelson, *et al.,* confirmed that ultrafine particles can be reduced by a factor of ten by oxidizing volatile organics, and by an additional factor of ten by reducing sulfur in the fuel. Catalyzed PM traps efficiently oxidize nearly all of the volatile organic PM precursors, and elimination of as much fuel sulfur as possible will substantially reduce the number of ultrafine PM emitted from diesel engines. The combination of catalyzed PM traps with low sulfur fuel is expected to result in very large reductions in both PM mass and the number of ultrafine particles.

The data currently available show that catalyzed particulate filters can provide significant reductions in PM. Catalyzed particulate filters, in conjunction with low sulfur fuel, have been shown to be more than 90 percent efficient over the FTP and at most SET modes.[113] Testing completed as part of the Diesel Emission Control Sulfur Effects (DECSE) program has demonstrated that a heavy duty diesel engine can achieve less than 0.01 g/bhp-hr PM emissions over the supplemental emission test when equipped with a catalyzed diesel particulate filter and operated on diesel fuel with sulfur content less than 15 ppm.[114] Further testing at NVFEL has demonstrated that FTP PM emissions can likewise be controlled below 0.01 g/bhp-hr provided less than 15 ppm sulfur diesel fuel is used with a catalyzed PM trap.[115] Based upon these test results, extensive field experience throughout the world and International Truck and Engine Corporation's commitment to produce vehicles with this technology in 2001, we conclude that the 0.01 g/bhp-hr FTP PM standard is feasible and that it represents the lowest emission level possible having given consideration to cost, energy and safety factors.

With regard to the NTE PM requirements, there is the potential for sulfate production during some operating modes covered by the NTE which would likely exceed the FTP PM standard. However, the NTE PM standard is equal to 1.5 × FTP standard. Even though the FTP standard of 0.01 g/bhp-hr PM is very low, the small additional head room provided by a

[108] Telephone conversation between Dr. Barry Cooper, Johnson Matthey, and Todd Sherwood, EPA, Air Docket A–99–06.

[109] The average temperatrue in Helsinki, Finland, for the month of January is 21°F. The average temperature in Stockholm, Sweden, for the month of January is 26°F. The average temperature at the University of Michigan in Ann Arbor, Michigan, for the month of January is 24°F. The temperature reported here are from *www.worldclimate.com* based upon the Global Historical Climatology Network (GHCN) produced jointly by the National Climatic Data Center and Carbon Dioxide Information Analysis Center at Oak Ridge National Laboratory (ORNL).

[110] Letter from Dr. Barry Cooper to Don Kopinski US EPA, Air Docket A–99–06.

[111] International Truck and Engine Corporation's comments on the proposed 2007 heavy duty vehicle standards, Air Docket A–99–06, page 2.

[112] Hawker, P., *et al.,* Effect of a Continuously Regenerating Diesel Particulate Filter on Non-Regulated Emissions and Particle Size Distribution, SAE 980189.

[113] Demonstration of Advanced Emission Control Technologies Enabling Diesel-Powered Heavy-Duty Engines to Achieve Low Emission Levels, Manufacturers of Emissions Controls Association, June 1999.

[114] Testing for the DECSE program was conducted on 3 ppm and 30 ppm diesel fuel. A straight-line fit to the results between 3 ppm and 30 ppm shows that a 15 ppm cap fuel would have emissions less than 0.01 g/bhp-hr. Diesel Emission Control Sulfur Effects (DECSE) Program, Phase I Interim Data Report No. 4: Diesel Particulate Filters—Final Report, January 2000.

[115] Memorandum from Charles Schenk, EPA, to Air Docket A–99–06, ''Summary of EPA PM Efficiency Data,'' May 8, 2000.

EXHIBIT J

NTE multiplier of 1.5 will be sufficient to enable PM trap equipped HDDEs to meet the NTE provisions, even when operated on 15 ppm sulfur fuel. This is supported by data generated as part of the DECSE test program, as well as data generated at our own laboratory, as discussed in greater detail in the RIA.[116] As discussed in the RIA, the expanded ambient condition requirements of the NTE test procedure will have little effect on the PM reduction capabilities of a PM trap. The SET PM requirements have also been demonstrated in our laboratory and are supported by the DECSE test program. A detailed discussion is contained in the RIA. Based on this information and assessment, we conclude that the PM supplemental requirements will be feasible in the 2007 time frame.

b. Meeting the NO_X Standard

NO_X emissions from gasoline-powered vehicles are controlled to extremely low levels through the use of the three-way catalyst technology first introduced in the 1970s. Today, an advancement upon this well-developed three-way catalyst technology, the NO_X adsorber, has shown that it too can make possible extremely low NO_X emissions from lean-burn engines such as diesel engines. The potential of the NO_X adsorber catalyst is limited only by its need for careful integration with the total vehicle system (as was done for three-way catalyst equipped passenger cars in the 1980s and 1990s) and by poisoning of the catalyst from sulfur in the fuel. Just as the Tier 2 rulemaking enables advanced three-way catalyst equipped vehicles to meet ultra low NO_X emission levels through the use of low sulfur gasoline, today's rulemaking will enable NO_X adsorbers through substantial reductions in diesel fuel sulfur levels. The NO_X adsorber has already been commercially introduced in a number of stationary and mobile source applications.

NO_X Adsorbers in Power Generation

NO_X adsorber catalysts were first introduced in the power generation market less than five years ago. Since then, NO_X adsorber systems in stationary source applications have enjoyed considerable success. In 1997, the South Coast Air Quality Management District of California determined that a NO_X adsorber system provided the ''Best Available Control Technology'' NO_X limit for gas turbine power systems.[117] Average NO_X control for these power generation facilities is in excess of 92 percent.[118] A NO_X adsorber catalyst applied to a natural gas fired powerplant has demonstrated better than 99 percent reliability for more than 21,000 hours of operation while controlling NO_X by more than 90 percent.[119]

NO_X Adsorbers in Lean-Burn Gasoline Vehicles

The NO_X adsorber's ability to control NO_X under oxygen rich (fuel lean) operating conditions has led the industry to begin applying NO_X adsorber technology to lean-burn engines in mobile source applications. NO_X adsorber catalysts have been developed and are now in production for lean-burn gasoline vehicles in Japan, including several vehicle models sold by Toyota Motor Corporation.[120] The 2000 model year saw the first U.S. application of this technology with the introduction of the Honda Insight, certified to the California LEV–I ULEV category standard. These lean burn gasoline applications are of particular interest because they are similar to diesel vehicle applications in terms of NO_X storage under lean exhaust conditions and the need for periodic NO_X regeneration under transient driving conditions. The substantial experience already gained and continuing to be gained from NO_X adsorber use in lean-burn gasoline vehicles provides a firm basis from which diesel NO_X adsorber development is proceeding.

NO_X Adsorbers in Light-Duty Diesel Vehicles

This rapid development pace of the NO_X adsorber technology is not limited to gasoline applications but includes markets where low sulfur diesel fuel is already available or has been mandated to coincide with future emission standards. In Japan, Toyota Motor Corporation has recently announced that it will begin introducing vehicles using its Diesel Particulate— NO_X Reduction (DPNR) system in 2003. This system uses a NO_X adsorber catalyst applied on the surface of a diesel particulate filter, providing greater than 80 percent reductions in both PM and NO_X. Toyota notes however, that DPNR requires fuel with low sulfur content in order to maintain high efficiency for a long duration.[121] In Europe, both Daimler Chrysler and Volkswagen, driven by a need to meet stringent Euro IV emission standards, have published results showing how they would apply the NO_X adsorber technology to their diesel-powered passenger cars. Volkswagen reports that it has already demonstrated NO_X emissions of 0.137 g/km (0.22 g/mi), a 71 percent reduction, on a diesel powered Passat passenger car equipped with a NO_X adsorber catalyst.[122]

US DOE Research Programs

The U.S. Department of Energy (DOE) has funded several test programs at national laboratories and in partnership with industry to investigate NO_X adsorber technology. At Oak Ridge National Laboratory, DOE researchers have shown that a NO_X adsorber and a laboratory regeneration system can reduce NO_X by more than 90 percent when used on a diesel powered Mercedes A-class passenger car. Following 600 miles of driving with 150 ppm sulfur fuel, the system performance degraded considerably.[123] While the system was not production ready, it does demonstrate that very high efficiencies are achievable with advanced emission control systems operating on low sulfur fuel.[124] With additional system development over the next several years we are confident that the remaining design challenges such as long-term durability will be solved.

EPA NVFEL Current Technology Evaluation Program

As part of an effort to evaluate the rapidly developing state of this technology, the Manufacturers of Emission Control Association (MECA) provided four different NO_X adsorber catalyst formulations to EPA for

[116] Diesel Emission Control Sulfur Effects (DECSE) Program—Phase II Interim Data Report No. 4, Diesel Particulate Filters—Final Report, January 2000, Table C1, www.ott.doe.gov/decse.

[117] Letter from Barry Wallerstein, Acting Executive Officer, SCAQMD, to Robert Danziger, Goal Line Environmental Technologies, dated December 8, 1997, www.glet.com.

[118] Reyes and Cutshaw, $SCONO_X$ Catalytic Absorption System, December 8, 1998, www.glet.com.

[119] Danziger, R. *et al.* 21,000 Hour Performance Report on SCONOX, 15 September 2000, Air Docket A–99–06.

[120] Toyota requires that their lean burn gasoline engines equipped with NO_X adsorbers are fueled on premium gasoline in Japan, which has an average sulfur content of 6 ppm. (See Item IV–E–31 in Air Docket A–99–06.)

[121] Revolutionary Diesel Aftertreatment System Simultaneously Reduces Diesel Particulate Matter and Nitrogen Oxides, Toyota Motor Corporation press release, July 25, 2000, contained in Air Docket A–99–06.

[122] Pott, E., *et al.*, ''Potential of NO_X-Trap Catalyst Application for DI–Diesel Engines,'' Air Docket A–99–06.

[123] Diesel Vehicle Emission Control Sulfur Effects Project at Oak Ridge National Laboratory, Phase 1 Overview. Pete Devlin, DOE Office of Transportation Technologies, March 29, 2000, Air Docket A–99–06.

[124] Diesel Emission Control Sulfur Effects (DECSE) Program Phase II Summary Report: NO_X Adsorber Catalysts, October 2000, Air Docket A–99–06.

EXHIBIT J

evaluation. Testing of these catalysts at NVFEL revealed that all four formulations were capable of reducing NO_X emissions by more than 90 percent over the broad range of operation in the supplemental emission test (SET) procedure as summarized in Figure III–1. At operating conditions representative of ''road-load'' operation for a heavy duty on-highway truck, the catalysts showed NO_X reductions as high as 99 percent resulting in NO_X emissions well below 0.1 g/bhp-hr from an engine-out level of nearly 5 g/bhp-hr.[125] Testing on the FTP has shown similarly good results, with hot start FTP NO_X emissions reduced by more than 90 percent. These results demonstrate that significant NO_X reductions are possible over a broad range of operating conditions with current NO_X adsorber technology, as typified by the FTP and the SET.

[125] For more information on testing conducted at NVFEL, refer to the in-depth discussion given in the RIA, and to the initial test report contained in Air Docket A–99–06, Item IV–A–29.

BILLING CODE 6560–50–P

EXHIBIT J

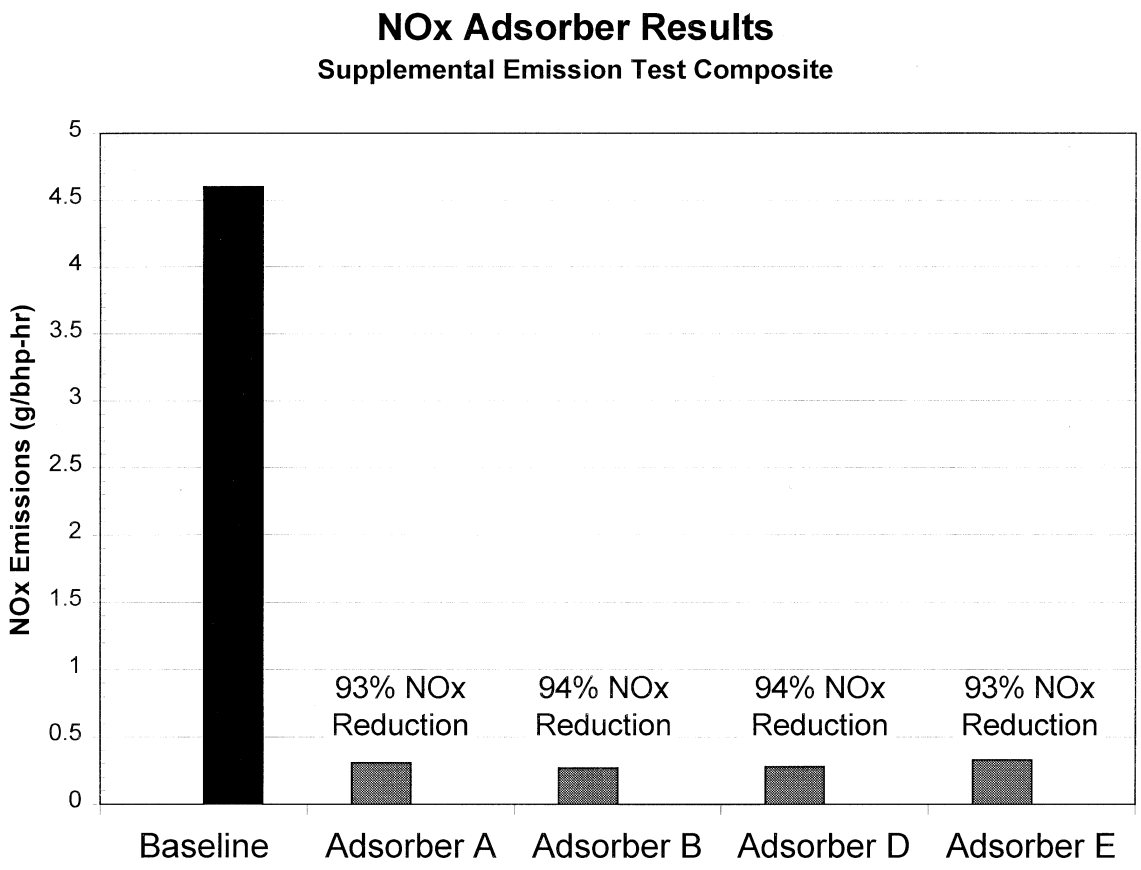

Figure III-1. NVFEL NOx Adsorber SET Composite Results

BILLING CODE 6560–50–C

EXHIBIT J

This large body of evidence that NO_X adsorbers are highly effective, that they can be applied to diesel engines (as further described in the RIA), and that there is a clear and strong prospect for their further development, causes us to conclude that NO_X adsorbers will provide at least one feasible path to the NO_X standards we have set today. Further, we can conclude from this development experience that the 0.20 g/bhp-hr NO_X standard represents the lowest standard achievable by the year 2007, having given appropriate consideration to cost, energy, and safety as described elsewhere in sections III and V of this document and in the RIA.

Remaining Engineering Development

The considerable success in demonstrating NO_X adsorber technology in laboratory settings, as outlined above, clearly shows that the technology is currently capable of achieving the NO_X standard level. There are several engineering challenges that will be addressed in going from this level of demonstration to implementation of durable and effective emission control systems on production vehicles. One of these technical challenges involves changes to the way diesel engines will need to operate in order to take full advantage of the NO_X adsorber, representing a shift from current day engine operation. Working within the engine design and operating principles expected for 2004 model year engines, optimization of the total system (matching exhaust temperatures to the operating window of NO_X adsorbers and controlling exhaust air to fuel ratios), will be essential to getting the best performance from the NO_X adsorber. We have estimated in the RIA that diesel engine manufacturers collectively will need to invest $385 million in order to implement this change. In addition to the generic need to optimize operation to match the NO_X adsorber performance, industry will further need to address NO_X adsorber desulfation and its associated issues because some sulfur will still remain in the fuel and the engine's lubricating oil.

Clear engineering paths to address these problems can be described today, several years in advance of when they will need to be applied. The primary thing that must occur is to eliminate most of the sulfur from diesel fuel. The fuel sulfur standard set today in this rulemaking overcomes this obstacle. The second set of system engineering steps needed to accomplish both NO_X regeneration and desulfation are already being laid out in test programs conducted by DOE in the DECSE Phase II program and in our own test program at the National Vehicle and Fuel Emissions Laboratory. The DECSE Phase II program clearly demonstrates that, through changes in ''in-cylinder'' operation, diesel exhaust conditions can be generated that are optimized for NO_X storage (fuel lean operation), NO_X regeneration (fuel rich operation), or desulfation (hot, fuel rich operation). This in-cylinder approach, discussed more fully in the RIA, represents a likely technical solution for light heavy-duty vehicles which are expected to already have the necessary EGR and common rail fuel system technologies need for this approach by the 2004 model year. Testing at NVFEL shows yet another engineering path to optimizing the NO_X control system external to the combustion system. This approach segregates the exhaust into separate streams external to the engine and manipulates exhaust conditions by changing exhaust mass flow (through valves) and by adding supplemental fuel with an electronic fuel injector. This approach means that exhaust temperatures and air to fuel ratios can be controlled external to the engine allowing great flexibility to control and optimize NO_X regeneration and sulfur regeneration events. This approach may prove to be a good solution for heavy heavy-duty vehicles because of the freedom it allows for optimization of both the engine operation and the aftertreatment operation with fewer tradeoffs with regards to fuel consumption and engine durability. A complete description of this approach and its merits is given in the RIA.

Each of the engineering paths described here shows a means for compliance with the NO_X standard given further optimization and development and, given past experiences with the introduction of new technologies, other approaches are likely to be devised as well. Given industry's demonstrated ability to develop solutions to similar issues with gasoline three-way catalysts and gasoline-based NO_X adsorber technologies, we are confident that the NO_X emission control system can be designed for the long life required for heavy-duty diesel operation. We are not alone in this evaluation of NO_X adsorber development, as evidenced by the strong endorsement of the technology by many in the industry.[126] For example, one letter we have received stated, ''We believe all NO_X Adsorber development issues have been identified and the technology is proceeding according to schedule. We have identified development paths leading toward production optimization and do not see insurmountable technical barriers. We are confident in our ability and experience in applying the science of surface chemistry and catalysis to achieve our objective.'' [127]

NTE NO_X Limits

The broad NO_X reduction capability of the NO_X adsorbers will also enable the NTE NO_X requirements to be met. As discussed previously, we have established an NTE NO_X standard of 1.5 × FTP standard, or 0.30 g/bhp-hr NO_X, which is 0.10 g/bhp-hr above the FTP standard. The NMHC+NO_X NTE standard for 2004 technology HDDEs is 1.25 × 2.5 g/bhp-hr NMHC + NO_X, or 3.125 g/bhp-hr, which is 0.625 g/bhp-hr above the 2004 FTP standard. As discussed in the RIA for this final rule, we would expect that the majority of the NTE standard for a 2004 technology engine would be comprised of NO_X emissions, perhaps as much as 3.0 g/bhp-hr (with the remainder, 0.125 g/bhp-hr, being HC). Based on available data, including data from our NVFEL test facility, we believe a NO_X adsorber system will be capable of a 90 percent or greater emission reduction across the entire NTE control zone, for the test conditions covered by the NTE test procedure, by model year 2007. A 90 percent reduction from the ''base'' NO_X NTE level of 3.0 g/bhp-hr would result in a tailpipe emission rate of 0.30 g/bhp-hr, which is 1.5 times the 2007 FTP NO_X standard. As discussed in the RIA, we have demonstrated NO_X reductions on the order of 90 percent or greater across the NTE control zone in our test program at NVFEL. A complete description of the NO_X adsorber testing completed at NVFEL is provided in the final RIA and in the docket associated with this rule. This testing was performed at standard laboratory conditions; however, we do not expect the expanded ambient conditions required for NTE compliance to have a significant impact on the performance of the exhaust emission control systems. Additional discussion of this issue is contained in the RTC and the RIA for this rule.

[126] Letter from Steven Suttle, Corning, Inc., to Margo Oge, EPA, dated October 23, 2000, Item IV–G–59; letter from Martin Lassen, Johnson Matthey, to Margo Oge, EPA, dated October 19, 2000, Item IV–G–55; letter from John Mooney, Engelhard Corporation, to Margo Oge, EPA, dated October 3, 2000, Item IV–G–38; MECA press release dated October 3, 2000, Item IV–G–53; and Department of Energy, dated September 6, 2000, Item IV–G–28; all contained in Docket A–99–06.

[127] Letter from John J. Mooney, Director, Technical Development and Business Groups, Engelhard Corporation, to Margo Oge, Director, OTAQ, EPA, dated October 3, 2000, Item IV–G–38, Docket A–99–06.

EXHIBIT J

Sulfur Trap

The preceding discussion of NO_X adsorbers assumes that SO_X (SO_2 and SO_3) emissions will be ''trapped'' on the surface of the catalyst, effectively poisoning the device and requiring a ''desulfation'' (sulfur removal event) to recover catalyst efficiency. We believe that, at the 15 ppm cap fuel sulfur level, this strategy will allow effective NO_X control with moderately frequent desulfation and with a modest fuel consumption of one percent. We believe this fuel consumption impact will be more than offset by reduced reliance on current, more fuel inefficient NO_X control strategies (see discussion in Section III.G for estimates of overall fuel economy impacts). In the NPRM for this rulemaking, we sought comment on the potential of a separate SO_X trap catalyst to control sulfur poisoning of the NO_X adsorber catalyst. As detailed further in the final RIA and RTC documents, we believe that even if a separate SO_X trap system were used, fuel sulfur levels would have to be 15 ppm or lower in order for the NO_X adsorber technology to function properly over the life of a heavy-duty vehicle.

Urea SCR Technology

SCR Technology has been put forward by some as another means of meeting stringent NO_X standards. For reasons discussed below we do not believe that it provides an adequate basis for establishing the feasibility of today's emission standards. Selective Catalytic Reduction (SCR), like the NO_X adsorber technology, was first developed for stationary applications and is currently being refined for the transient operation found in mobile applications. With the SCR system, a urea solution is injected upstream of the catalyst which breaks down the urea into ammonia and carbon dioxide. The ammonia is used as a NO_X reductant across the SCR catalyst producing N_2 and water. Catalysts containing precious metals (platinum) can be used at the inlet and outlet of SCR systems designed for mobile applications to improve low temperature NO_X reduction performance and to oxidize any ammonia that may pass through the SCR, respectively. SCR systems using these oxidation catalysts and being developed for mobile applications are more often called ''compact SCR'' systems. Generally, reference to SCR throughout this preamble should be taken to mean compact SCR. The use of these platinum catalysts enables SCR systems to achieve NO_X reductions at lower temperatures (as required for diesel engine applications), but introduces sensitivity to sulfur in much the same way as for diesel particulate filter technologies. Sulfur in diesel fuel inhibits low temperature performance and results in high sulfate-make, leading directly to higher particulate emissions. For a further discussion of SCR system sensitivity to sulfur in diesel fuel, and of its need for low sulfur diesel fuel, refer to Section III.F.

Urea SCR catalysts, like NO_X adsorbers, need low sulfur diesel fuel to achieve high NO_X conversion efficiencies and to control sulfate PM emissions. If low sulfur fuel is required, SCR NO_X control may be possible in some applications by 2007. However we believe there are significant barriers to its general use for meeting the 2007 standards. SCR systems require vehicles to carry a supply of urea. The infrastructure for delivering urea at the diesel fuel pump would need to be in place for these devices to be feasible in the marketplace; and before development of the infrastructure could begin, the industry would have to decide upon a standardized method of delivery for the urea supply.

In addition to this, there would need to be adequate safeguards in place to ensure the urea is used throughout the life of the vehicle since, given the added cost of urea and the fact that urea depletion would not normally affect driveability, there would be an incentive not to refill the urea tank. This could lead to considerable uncertainties regarding the effectiveness of SCR, even if EPA were to promulgate the regulations that likely would be needed to require the regular replenishment of urea. Some commenters have suggested that this is the key issue with regard to urea SCR systems. One commenter further concludes that this issue could be addressed by designing engines with on-board diagnostic systems utilizing a NO_X sensor that would observe a loss of NO_X control. When observed, the engine would be designed to reduce power gradually until a 50 percent loss of power was realized. This power loss would serve to encourage the user to replenish the urea tank.[128] While such an approach may be possible, it raises concerns for public safety as poor engine performance could lead to inadequate power for safe merging onto highways and other related driving situations. We remain hesitant to base a national program on such technology when important issues such as driver training on the need to refill the urea tank and the consequences of failure to do so cannot be appropriately controlled. This approach would seem to suggest a need for EPA-mandated spot checks of individual vehicles to ensure compliance with the NO_X standard. How such a program would work and the burden that it might place on small business entities was not addressed in the comments. In testimony given at the public hearing held for this rulemaking in Los Angeles, the California Trucking Association raised concerns about the appropriateness of putting this regulatory burden on truckers when a simpler technology such as a diesel NO_X adsorber was available instead.[129] Without measures similar to these, we would expect that a substantial number of users would not remember to fill their urea tanks. Since failure to provide urea for a vehicle would lead to a total loss of NO_X control for that vehicle, we would need to model the loss of NO_X control to be expected from an SCR based program. Such a loss in NO_X control most likely would be appreciable and, in effect, the NO_X standard would not be met on a fleetwide basis.

We believe that these significant obstacles would prevent the widespread or general availability of SCR for use as a NO_X control strategy to meet the 0.20 g/bhp-hr NO_X standard. These problems may, however, be resolved in some niche applications; for example, certain well-managed centrally-fueled fleets. Because of the many obstacles to ensure in-use NO_X control with the SCR, we do not believe that feasibility of the 0.20 g/bhp-hr NO_X standard can be based upon SCR technology. For further discussion of urea SCR's need for low sulfur diesel fuel, refer to section III.F of this preamble.

Summary

Based on the discussion above, we believe that NO_X exhaust emission control technology, in combination with low sulfur diesel fuel of 15 ppm or lower, is capable of meeting the very stringent NO_X standards finalized today. The certainty provided by this rulemaking that low sulfur diesel fuel will be available in the future, and the emission standards finalized today that necessitate advanced NO_X controls, should lead to rapid development of these technologies. The NO_X adsorber technology has shown remarkable advancement in the last five years, both in stationary source applications and

[128] API Comments on the 2007 Heavy Duty Engine/Diesel Sulfur Proposed Rule, August 14, 2000, Air Docket A–99–06, IV–D–343.

[129] Testimony of Stephanie Williams—Director of Environmental Affairs, California Trucking Association to EPA public hearing June 27, 2000, Air Docket A–99–06, IV–F–190.

EXHIBIT J

lean-burn gasoline applications, and now for heavy-duty diesel engines. Given this rapid progress, the availability of low sulfur diesel fuel, the identification of engineering paths to resolving the technological issues, and the lead time provided by today's rulemaking, we believe that applying NO_X adsorbers to heavy-duty diesel engines will provide the emission reductions needed to comply with the 2007 HD NO_X standards. This can be done in a cost effective way, with little or no fuel economy impact, and no special concerns of safety.

c. Meeting the NMHC Standard

Historically control of non-methane hydrocarbon (NMHC) emissions on diesel engines has been relatively simple, when compared to gasoline engines, due to the net fuel lean (abundant oxygen) operation typical of diesel engines. In fact, due to this operating characteristic, diesel engine NMHC levels have often been significantly below the mandated levels. The introduction of catalytic NO_X control and the subsequent need to operate under alternately net lean and net rich conditions is likely to make NMHC control more difficult.

Meeting the NMHC standards under the lean operating conditions typical of the biggest portion of NO_X adsorber operation should not present any special challenges to diesel manufacturers. Since the devices discussed above—catalyzed particulate filters and NO_X adsorbers, contain platinum and other precious metals to oxidize NO to NO_2, they are also very efficient oxidizers of hydrocarbons. NMHC emission reductions of greater than 95 percent have been shown in these devices over the transient FTP and SET modes.[130] Given that typical engine-out NMHC is expected to be in the 0.20 g/bhp-hr range for engines meeting the 2004 standards, this level of NMHC reduction will mean that under lean conditions emission levels will be well below the standard.

However, the NO_X regeneration strategies for the NO_X adsorber technology may prove difficult to control precisely, leading to a possible increase in HC emissions under the rich operating conditions required for NO_X regeneration. Even with precise control of the regeneration cycle, HC slip may prove to be a difficult problem due to the need to regenerate the NO_X adsorber under net rich conditions (excess fuel) rather than the stoichiometric (fuel and air precisely balanced) operating conditions typical of a gasoline three-way catalyst. It seems likely therefore, that in order to meet the HC standards we have set, an additional clean up catalyst may be necessary. A diesel oxidation catalyst, like those applied historically for HC and partial PM control, can reduce HC reductions (including toxic HCs) by more than 80 percent.[131] This amount of additional control along with optimized NO_X regeneration strategies will ensure very low HC emissions. With such a downstream clean-up device to control HC slip during the periodic NO_X regeneration event, the HC standard we have set here can be met. For a complete description of how the clean up catalyst functions in conjunction with the NO_X adsorber technology, please refer to the complete system description given below in section III.E.1.e and to the final RIA.

Given industry's extensive experience with diesel oxidation catalysts, the long lead time provided by this rulemaking and the availability of less than 15 ppm sulfur diesel fuel, we conclude, having given consideration to cost, energy impacts and safety, that the NMHC standard is feasible.

d. Meeting the Crankcase Emissions Requirements

The most common way to eliminate crankcase emissions has been to vent the blow-by gases into the engine air intake system, so that the gases can be recombusted. Until today's rulemaking, we have required that crankcase emissions be controlled only on naturally aspirated diesel engines. We have made an exception for turbocharged heavy-duty diesel engines because of concerns in the past about fouling that could occur by routing the diesel particulates (including engine oil) into the turbocharger and aftercooler. However, this is an environmentally significant exception since most heavy-duty diesel trucks use turbocharged engines, and a single engine can emit over 100 pounds of NO_X, NMHC, and PM from the crankcase over its lifetime.

Given the available means to control crankcase emissions, we have eliminated this exception. We anticipate that the heavy-duty diesel engine manufacturers will be able to control crankcase emissions through the use of closed crankcase filtration systems or by routing unfiltered blow-by gases directly into the exhaust system upstream of the emission control equipment. However, the provision has been written such that if adequate control can be had without ''closing'' the crankcase then the crankcase can remain ''open.'' Compliance would be ensured by adding the emission from the crankcase ventilation system to the emissions from the engine control system downstream of any emission control equipment.

We expect that in order to meet the stringent tailpipe emission standards set here, that manufacturers will have to utilize closed crankcase approaches as described here. Closed crankcase filtration systems work by separating oil and particulate matter from the blow-by gases through single or dual stage filtration approaches, routing the blow-by gases into the engine's intake manifold and returning the filtered oil to the oil sump. These systems are required for new heavy-duty diesel vehicles in Europe starting in 2000. Oil separation efficiencies in excess of 90 percent have been demonstrated with production ready prototypes of two stage filtration systems.[132] By eliminating 90 percent of the oil that would normally be vented to the atmosphere, the system works to reduce oil consumption and to eliminate concerns over fouling of the intake system when the gases are routed through the turbocharger. Mercedes-Benz currently utilizes this type of system on virtually all of its heavy-duty diesel engines sold in Europe. An alternative approach would be to route the blow-by gases into the exhaust system upstream of the catalyzed diesel particulate filter which would be expected to effectively trap and oxidize the engine oil and diesel PM. This approach may require the use of low sulfur engine oil to ensure that oil carried in the blow-by gases does not compromise the performance of the sulfur-sensitive emission control equipment.

e. The Complete System

We expect that the technologies described above would be integrated into a complete emission control system as described in the final RIA. The engine-out emissions will be balanced with the exhaust emission control package in such a way that the result is the most beneficial from a cost, fuel economy and emissions standpoint. The engine-out exhaust characteristics will also have a role in assisting the exhaust emission control devices used. The NO_X

[130] ''The Impact of Sulfur in Diesel Fuel on Catalyst Emission Control Technology,'' report by the Manufacturers of Emission Controls Association, March 15, 1999, pp. 9 & 11.

[131] Demonstration of Advanced Emission Control Technologies Enabling Diesel-Powered Heavy-Duty Engines to Achieve Low Emission Levels, Manufacturers of Emissions Controls Association, June 1999.

[132] Letter from Marty Barris, Donaldson Corporation, to Byron Bunker US EPA, March 2000. Air Docket A–99–06.

EXHIBIT J

adsorber, for instance, will require periods of oxygen-depleted exhaust flow in order to accomplish NO_X regeneration and to allow for sulfur control using desulfation events. This may be most efficiently done by reducing the air-fuel ratio that the engine is operating under during the regeneration to reduce the oxygen content of the exhaust, or alternatively by partitioning the exhaust flow such that only a small portion of the exhaust flow is used for NO_X regeneration, thereby reducing the amount of oxygen needing to be depleted through fuel addition. Further, it is envisioned that the PM device will be integrated into the exhaust system upstream of the NO_X reduction device. This placement would allow the PM trap to take advantage of the engine-out NO_X as an oxidant for the particulate, while removing the particulate so that the NO_X exhaust emission control device will not have to deal with large PM deposits which may cause a deterioration in performance. Further it allows the NO_X adsorber to make use of the upstream PM filter as a pre-catalyst to oxidize some NO to NO_2 and to partially oxidize the reductant (diesel fuel or exhaust hydrocarbons) to a more desirable reductant form such as CO before entering the NO_X adsorber. Of course, there is also the possibility of integrating the PM and NO_X exhaust emission control devices into a single unit to replace a muffler and save space (Toyota's DNPR system being an example of this approach).[133] The final component in any of these system configurations is likely to be some form of clean up catalyst which can provide control of HC slip during NO_X regeneration as well as H_2S slip during SOx regeneration. Particulate free exhaust may also allow for new options in EGR system design to optimize its efficiency.

We expect that the emission reduction efficiency of the exhaust emission control system will vary across the NTE zone as a function of exhaust temperature and space velocity.[134] Consequently, to maintain the NTE emission cap, the engine-out emissions would have to be calibrated with exhaust emission control system performance characteristics in mind. This would be accomplished by lowering engine-out emissions where the exhaust emission control system was less efficient, for example by retarding fuel injection timing or increasing the EGR rate. Conversely, where the exhaust emission control system is very efficient at reducing emissions, the engine-out emissions could be tuned for higher emissions and better fuel economy. These trade-offs between engine-out emissions and exhaust emission control system performance characteristics are similar to those of gasoline engines with three-way catalysts in today's light-duty vehicles and can be overcome through similar system based engineering solutions. Managing and optimizing these trade-offs will be crucial to effective implementation of exhaust emission control devices on diesel applications.

2. Feasibility of Stringent Standards for Heavy-Duty Gasoline

Gasoline emission control technology has evolved rapidly in recent years. Emission standards applicable to 1990 model year vehicles required roughly 90 percent reductions in exhaust NMHC and CO emissions and a 75 percent reduction in NO_X emissions compared to uncontrolled emissions. Today, some vehicles' emissions are well below those necessary to meet the current federal heavy-duty gasoline standards, the 2004 heavy-duty gasoline standards, and the California Low-Emission Vehicle standards for medium-duty vehicles. The continuing emissions reductions have been brought about by ongoing improvements in engine air-fuel management hardware and software plus improvements in exhaust system and catalyst designs.

We believe that the types of changes being seen on current vehicles have not yet reached their technological limits and continuing improvement will allow them to meet today's standards. The RIA describes a range of specific emission control techniques that we believe could be used. There is no need to invent new technologies, although there will be a need to apply existing technology more effectively and more broadly. The focus of the effort will be in the application and optimization of these existing technologies.

In our light-duty Tier 2 rule, we have required that gasoline sulfur levels be reduced to a 30 ppm average, with an 80 ppm maximum. This sulfur level reduction is the primary enabler for the Tier 2 standards. Similarly, we believe that the gasoline sulfur reduction, along with refinements in existing gasoline emission control technology, will be sufficient to allow heavy-duty gasoline vehicles and engines to meet the emission standards sought by today's rule.

However, we recognize that the emission standards are stringent, and considerable effort will have to be undertaken. For example, we expect that every engine will have to be recalibrated to improve upon its cold start emission performance. Manufacturers will have to migrate their light-duty calibration approaches to their heavy-duty offerings to provide cold start performance in line with what they will have to achieve to meet the Tier 2 standards.

We also project that today's new heavy-duty gasoline standards would require the application of advanced engine and catalyst systems similar to those projected for their light-duty counterparts. Historically, manufacturers have introduced technology on light-duty gasoline applications and then applied those technologies to their heavy-duty gasoline applications. Today's standards will allow manufacturers to take this same approach. In other words, we expect that manufacturers will meet today's new standards through the application of technology developed to meet light-duty Tier 2 standards for 2004.

Improved calibration and systems management will be critical in optimizing the performance of the engine with the advanced catalyst system. Precise air/fuel control must be tailored for emissions performance and must be optimized for all types of driving. Calibration refinements may also be needed for EGR system optimization and to reduce cold start emissions through methods such as spark timing retard. We also project that electronic control modules with expanded capabilities will be needed on some vehicles and engines.

We also expect increased use of other technologies in conjunction with those described above. We expect some increased use of air injection to improve upon cold start emissions. We may also see air-gap manifolds, exhaust pipes, and catalytic converter shells as a means of improving upon catalyst light-off times thereby reducing cold start emissions. Other, non-catalyst related improvements to gasoline emission control technology include higher speed computer processors which enable more sophisticated engine control algorithms and improved fuel injectors providing better fuel atomization thereby improving fuel combustion.

Catalyst system durability is, and will always be, a serious concern. Historically, catalysts have deteriorated when exposed to very high temperatures. This has long been a concern especially for heavy-duty work

[133] Revolutionary Diesel Aftertreatment System Simultaneously Reduces Diesel Particulate Matter and Nitrogen Oxides, Toyota Motor Corporation press release, July 25, 2000, Air Docket A–99–06.

[134] The term, ''space velocity,'' is a measure of the volume of exhaust gas that flows through a device.

EXHIBIT J

vehicles. However, catalyst manufacturers continue to make strides in the area of thermal stability and we expect that improvements in thermal stability will continue for the next generation of catalysts.

We believe that, by optimizing all of these technologies, manufacturers will be able to achieve today's standards. Advanced catalyst systems have already shown potential to reduce emissions to close to these levels. Some current California vehicles are certified to levels below 0.20 g/mi NO_X. California tested an advanced catalyst system on a vehicle loaded to a test weight comparable to a heavy-duty vehicle test weight and achieved NO_X and NMOG levels of 0.1 g/mi and 0.16 g/mi, respectively. The California vehicle with the advanced catalyst had not been optimized as a system to take full advantage of the catalyst's capabilities.

The compliance flexibility provisions can also be an important tool for manufacturers in implementing a new standard. The program allows manufacturers to transition to the more stringent standards by introducing emissions controls over a longer period of time, as opposed to a single model year. Manufacturers plan their product introductions well in advance. With the compliance flexibilities, manufacturers can better manage their product lines so that the new standards don't interrupt their product introduction plans. Also, the program allows manufacturers to focus on higher sales volume vehicles first and use credits for low sales volume vehicles.

3. Feasibility of the New Evaporative Emission Standards

The new evaporative emission standards appear to be feasible now. Many designs have been certified that already meet these standards. A review of 1998 model year certification data indicates that five of eight evaporative system families in the 8,500 to 14,000 pound range comply with the new 1.4 g/test standard, while all evaporative system families in the over 14,000 pound range comply with the new 1.9 g/test standard.

The new evaporative emission standards should not require the development of new materials but may, in some cases, require new application of existing materials. Low permeability materials and low loss connections and seals are already used to varying degrees on current vehicles, but that practice may become more widespread. Today's new standards would likely ensure their consistent use and discourage manufacturers from switching to cheaper materials or designs to take advantage of the large safety margins they have had under current standards.

There are two approaches to reducing evaporative emissions for a given fuel. One is to minimize the potential for permeation and leakage by reducing the number of hoses, fittings and connections. The second is to use less permeable hoses and lower loss fittings and connections. Manufacturers are already employing both approaches.

Most manufacturers are moving to ''returnless'' fuel injection systems. Through more precise fuel pumping and metering, these systems eliminate the return line in the fuel injection system. The return line carries unneeded fuel from the fuel injectors back to the fuel tank. Because the fuel injectors are in such close contact with the hot engine, the fuel returned from the injectors to the fuel tank has been heated. This returned fuel is a significant source of fuel tank heat and vapor generation. The elimination of the return line also reduces the total length of hose on the vehicle though which vapors can permeate, and it reduces the number of fittings and connections through which fuel can leak.

Low permeability hoses and seals, and low loss fittings are available and are already used on many vehicles. Fluoropolymer materials can be added as liners to hose and component materials to yield large reductions in permeability over such conventional materials as monowall nylon. In addition, fluoropolymer materials can greatly reduce the adverse impact of alcohols in gasoline on permeability of evaporative components, hoses and seals.

F. Need for Low Sulfur Diesel Fuel

The following discussion will build upon the brief sulfur sensitivity points made earlier in this section by providing a more in-depth discussion of sulfur's effect on the diesel exhaust emission control technologies. In order to evaluate the effect of sulfur on diesel exhaust control technologies, we used three key factors to categorize the impact of sulfur in fuel on emission control function. These factors were efficiency, reliability, and fuel economy. Taken together these three factors lead us to believe that diesel fuel sulfur levels of 15 ppm will be required in order to make feasible the heavy-duty vehicle emission standards. Brief summaries of these factors are provided below. A more in-depth review is given in the following subsections and in the final RIA.

The efficiency of emission control technologies to reduce harmful pollutants is directly affected by sulfur in diesel fuel. Initial and long term conversion efficiencies for NO_X, NMHC, CO and diesel PM emissions are significantly reduced by catalyst poisoning and catalyst inhibition due to sulfur. NO_X conversion efficiencies with the NO_X adsorber technology in particular are dramatically reduced in a very short time due to sulfur poisoning of the NO_X storage bed. In addition, total PM control efficiency is negatively impacted by the formation of sulfate PM. As explained in detail in the following sections, all of the advanced NO_X and PM technologies described here have the potential to make significant amounts of sulfate PM under operating conditions typical of heavy-duty vehicles. We believe that the formation of sulfate PM will be in excess of the total PM standard, unless diesel fuel sulfur levels are at or below 15 ppm. Based on the strong negative impact of sulfur on emission control efficiencies for all of the technologies evaluated, we believe that 15 ppm represents an upper threshold of acceptable diesel fuel sulfur levels.

Reliability refers to the expectation that emission control technologies must continue to function as required under all operating conditions for the life of the vehicle. As discussed in the following sections, sulfur in diesel fuel can prevent proper operation of both NO_X and PM control technologies. This can lead to permanent loss in emission control effectiveness and even catastrophic failure of the systems. Sulfur in diesel fuel impacts reliability by decreasing catalyst efficiency (poisoning of the catalyst), increasing diesel particulate filter loading, and negatively impacting system regeneration functions. Among the most serious reliability concerns with sulfur levels greater than 15 ppm are those associated with failure to properly regenerate. In the case of the NO_X adsorber, failure to regenerate will lead to rapid loss of NO_X emission control as a result of sulfur poisoning of the NO_X adsorber bed. In the case of the diesel particulate filter, sulfur in the fuel reduces the reliability of the regeneration function. If regeneration does not occur, catastrophic failure of the filter could occur. It is only by the availability of low sulfur diesel fuels that these technologies become feasible. The analysis given in the following section makes clear that diesel fuel sulfur levels will need to be under 15 ppm in order to ensure robust operation of the technologies under the variety of operating conditions anticipated to be experienced in the field.

Fuel economy impacts due to sulfur in diesel fuel affect both NO_X and PM

EXHIBIT J

control technologies. The NO_X adsorber sulfur regeneration cycle (desulfation cycle) can consume significant amounts of fuel unless fuel sulfur levels are very low. The larger the amount of sulfur in diesel fuel, the greater the adverse effect on fuel economy. As sulfur levels increase above 15 ppm, the adverse effect on fuel economy becomes more significant, increasing above one percent and doubling with each doubling of fuel sulfur level. Likewise, PM trap regeneration is inhibited by sulfur in diesel fuel. This leads to increased PM loading in the diesel particulate filter and increased work to pump exhaust across this restriction. With low sulfur diesel fuel, diesel particulate filter regeneration can be optimized to give a lower (on average) exhaust backpressure and thus better fuel economy. Thus, for both NO_X and PM technologies the lower the fuel sulfur level the lower the operating costs of the vehicle.

1. Catalyzed Diesel Particulate Filters and the Need for Low Sulfur Fuel

Diesel particulate filters (PM traps) function to control diesel PM through mechanical filtration of PM from the diesel exhaust stream and then oxidation of the stored PM (trap regeneration). Through oxidation in the catalyzed diesel particulate filter the stored carbonaceous PM is converted to CO_2 and released into the atmosphere. Failure to oxidize the stored PM leads to accumulation in the trap, eventually causing the trap to become so full that it severely restricts exhaust flow through the device, leading to trap or vehicle failure.

As discussed earlier in this section, uncatalyzed diesel particulate filters require exhaust temperatures in excess of 650° C in order for the collected PM to be oxidized by the oxygen available in diesel exhaust. That temperature threshold for oxidation of PM by exhaust oxygen can be decreased to 450° C through the use of base metal catalytic technologies. For a broad range of operating conditions typical of in use operation, diesel exhaust is significantly cooler than 400° C. If oxidation of the trapped PM could be assured to occur at exhaust temperatures lower than 300° C, then diesel particulate filters would be expected to be robust for most applications and operating regimes. Oxidation of PM (regeneration of the trap) at such low exhaust temperatures can occur by using oxidants which are more readily reduced than oxygen. One such oxidant is NO_2.

NO_2 can be produced in diesel exhaust through the oxidation of the nitrogen monoxide (NO), created in the engine combustion process, across a catalyst. The resulting NO_2-rich exhaust is highly oxidizing in nature and can oxidize trapped diesel PM at temperatures as cool as 250°C.[135] Some platinum group metals are known to be good catalysts to promote the oxidation of NO to NO_2. Therefore in order to ensure passive regeneration of the diesel particulate filters, significant amounts of platinum group metals (primarily platinum) are being used in the wash-coat formulations of advanced diesel particulate filters. The use of platinum to promote the oxidation of NO to NO_2 introduces several system vulnerabilities affecting both the durability and the effectiveness of the catalyzed diesel particulate filter when sulfur is present in diesel exhaust. The two primary mechanisms by which sulfur in diesel fuel limits the robustness and effectiveness of diesel particulate filters are inhibition of trap regeneration, through inhibition of the oxidation of NO to NO_2, and a dramatic loss in total PM control effectiveness due to the formation of sulfate PM. Unfortunately, these two mechanisms trade-off against one another in the design of diesel particulate filters. Changes to improve the reliability of regeneration by increasing catalyst loadings lead to increased sulfate emissions and, thus, loss of PM control effectiveness. Conversely, changes to improve PM control by reducing the use of platinum group metals and, therefore, limiting ''sulfate make'' leads to less reliable regeneration. We believe the only means of achieving good PM emission control and reliable operation is to reduce sulfur in diesel fuel, as shown in the following subsections.

a. Inhibition of Trap Regeneration Due to Sulfur

The passively regenerating diesel particulate filter technologies rely on the generation of a very strong oxidant, NO_2, to ensure that the carbon captured by the PM trap's filtering media is oxidized under the exhaust temperature range of normal operating conditions. This prevents plugging and failure of the PM trap. NO_2 is produced through the oxidation of NO in the exhaust across a platinum catalyst. This oxidation is inhibited by sulfur poisoning of the catalyst surface.[136] This inhibition limits the total amount of NO_2 available for oxidation of the trapped diesel PM, thereby raising the minimum exhaust temperature required to ensure trap regeneration. Without sufficient NO_2, the amount of PM trapped in the diesel particulate filter will continue to increase and can lead to excessive exhaust back pressure, low engine power, and even catastrophic failure of the diesel particulate filter itself.

The failure mechanisms experienced by diesel particulate filters due to low NO_2 availability vary significantly in severity and long term consequences. In the most fundamental sense, the failure is defined as an inability to oxidize the stored particulate at a rate fast enough to prevent net particulate accumulation over time. The excessive accumulation of PM over time blocks the passages through the filtering media, making it more restrictive to exhaust flow. In order to continue to force the exhaust through the now more restrictive filter, the exhaust pressure upstream of the filter must increase. This increase in exhaust pressure is commonly referred to as increasing ''exhaust backpressure'' on the engine.

The increase in exhaust backpressure represents increased work being done by the engine to force the exhaust gas through the increasingly restrictive particulate filter. Unless the filter is frequently cleansed of the trapped PM, this increased work can lead to reductions in engine performance and increases in fuel consumption. This loss in performance may be noted by the vehicle operator in terms of poor acceleration and generally poor driveability of the vehicle. In some cases, engine performance can be so restricted that the engine stalls, stranding the vehicle. This progressive deterioration of engine performance as more and more PM is accumulated in the filter media is often referred to as ''trap plugging.'' Trap plugging also has the potential to cause engine damage. If the exhaust backpressure gets high enough to open the exhaust valves prematurely, the exhaust valves can then strike the piston causing catastrophic engine failure. Whether trap plugging occurs, and the speed at which it occurs, will be a function of many variables in addition to the fuel sulfur level; these variables include the vehicle application, its duty cycle, and ambient conditions. However, if the fuel sulfur level is sufficiently high to prevent trap regeneration in any real world conditions experienced, trap plugging can occur. This is not to imply that any time a vehicle is refueled once with high sulfur fuel trap plugging will occur. Rather, it is important to know that the use of fuel with sulfur levels higher than 15 ppm significantly

[135] Hawker, P. *et al.*, Experience with a New Particualte Trap Technology in Europe, SAE 970182.

[136] Hawker, P. *et al*, Experience with a New Particulate Trap Technology in Europe, SAE 970182.

EXHIBIT J

increases the chances of particulate filter failure.

Catastrophic failure of the filter can occur when excessive amounts of PM are trapped in the filter due to a lack of NO_2 for oxidation. This failure occurs when excessive amounts of trapped PM begin to oxidize at high temperatures (combustion-like temperatures of over 1000° C) leading to a ''run-away'' combustion of the PM. This can cause temperatures in the filter media to increase in excess of that which can be tolerated by the particulate filter itself. For the cordierite material commonly used as the trapping media for diesel particulate filters, the high thermal stresses caused by the high temperatures can cause the material to crack or melt. This can allow significant amounts of the diesel particulate to pass through the filter without being captured during the remainder of the vehicle's life. That is, the trap is destroyed and PM emission control is lost. Further the high temperatures generated during this event can destroy the downstream catalyst components, such as the NO_X adsorber, rendering them ineffective as well.

Full field test evaluations and retrofit applications of these catalytic trap technologies are occurring in parts of Europe where low sulfur diesel fuel is already available.[137] The experience gained in these field tests helps to clarify the need for low sulfur diesel fuel. In Sweden and some European city centers where below 10 ppm diesel fuel sulfur is readily available, more than 3,000 catalyzed diesel particulate filters have been introduced into retrofit applications without a single failure. Given the large number of vehicles participating in these test programs, the diversity of the vehicle applications which included intercity trains, airport buses, mail trucks, city buses and garbage trucks, and the extended time periods of operation (some vehicles have been operating with traps for more than 5 years and in excess of 300,000 miles[138]), there is a strong indication of the robustness of this technology on 10 ppm low sulfur diesel fuel. The field experience in areas where sulfur is capped at 50 ppm has been less definitive. In regions without extended periods of cold ambient conditions, such as the United Kingdom, field tests on 50 ppm cap low sulfur fuel have also been positive, matching the durability at 10 ppm, although sulfate PM emissions are much higher. However, field tests on 50 ppm fuel in Finland, where colder winter conditions are sometimes encountered (similar to many parts of the United States), showed a significant number of failures (~10 percent) due to trap plugging. This 10 percent failure rate has been attributed to insufficient trap regeneration due to fuel sulfur in combination with low ambient temperatures.[139] Other possible reasons for the high failure rate in Finland when contrasted with the Swedish experience appear to be unlikely. The Finnish and Swedish fleets were substantially similar, with both fleets consisting of transit buses powered by Volvo and Scania engines in the 10 to 11 liter range. Further, the buses were operated in city areas and none of the vehicles were operated in northern extremes such as north of the Arctic Circle.[140] Given that the fleets in Sweden and Finland were substantially similar, and given that ambient conditions in Sweden are expected to be similar to those in Finland, we believe that the increased failure rates noted here are due to the higher fuel sulfur level in a 50 ppm cap fuel versus a 10 ppm cap fuel.[141] Testing on an even higher fuel sulfur level of 200 ppm was conducted in Denmark on a fleet of 9 vehicles. In less than six months all of the vehicles in the Danish fleet had failed due to trap plugging.[142] The failure of some fraction of the traps to regenerate when operated on fuel with sulfur caps of 50 ppm and 200 ppm is believed to be primarily due to inhibition of the NO to NO_2 conversion as described here. Similarly the increasing frequency of failure with higher fuel sulfur levels is believed to be due to the further suppression of NO_2 formation when higher sulfur level diesel fuel is used.

As shown above, sulfur in diesel fuel inhibits NO oxidation leading to increased exhaust backpressure, reduced fuel economy, compromised reliability, and potentially engine damage. Therefore, we believe that, in order to ensure reliable and economical operation over a wide range of expected operating conditions, diesel fuel sulfur levels should be at or below 15 ppm. With these low sulfur levels we believe, as demonstrated by experience in Europe, that catalyzed diesel particulate filters will prove to be both durable and effective at controlling diesel particulate emissions. We did receive comments from the refining industry suggesting that PM filters could work on fuel sulfur levels as high as 50 ppm. The commenters pointed to some specific test programs where fuel with an approximate average sulfur level of 30 ppm was used as evidence of the robustness of the technology on higher sulfur fuels. While we do not deny that it is possible to operate some vehicles in limited applications over defined driving cycles on fuel as high as 30 ppm, we do not believe that this limited data should be the basis for a national program. The reality that some vehicles do fail on 50 ppm cap fuel, as demonstrated by the Finish fleet results mentioned above, shows that durability is not assured with the use of higher sulfur diesel fuel. We believe that the evidence, as a whole, shows that oxidation of NO to NO_2 will be poisoned due to these higher fuel sulfur levels with a resulting significant possibility of PM trap failures that is too great a concern for us to feel confident about a fuel sulfur level higher than 15 ppm.

b. Loss of PM Control Effectiveness

In addition to inhibiting the oxidation of NO to NO_2, the sulfur dioxide (SO_2) in the exhaust stream is itself oxidized to sulfur trioxide (SO_3) at very high conversion efficiencies by the precious metals in the catalyzed particulate filters. The SO_3 serves as a precursor to the formation of hydrated sulfuric acid (H_2SO_4+H_2O), or sulfate PM, as the exhaust leaves the vehicle tailpipe. Virtually all of the SO_3 is converted to sulfate under dilute exhaust conditions in the atmosphere as well in the dilution tunnel used in heavy-duty engine testing. Since virtually all sulfur present in diesel fuel is converted to SO_2, the precursor to SO_3, as part of the combustion process, the total sulfate PM is directly proportional to the amount of sulfur present in diesel fuel. Therefore, even though diesel particulate filters are very effective at trapping the carbon and the SOF portions of the total PM, the overall PM reduction efficiency of catalyzed diesel particulate filters drops off rapidly with increasing sulfur levels due to the formation of sulfate PM downstream of the trap.

[137] Through tax incentives 50 ppm cap sulfur fuel is widely available in the United Kingdom and 10 ppm sulfur is available in Sweden and in certain European city centers.

[138] Allansson, et al. SAE 2000–01–0480

[139] Letter from Dr. Barry Cooper, Johnson Matthey, to don Kopinski, US EPA, Air Docket A–99–06.

[140] Telephone conversation between Dr. Barry Cooper, Johnson Matthey, and Todd Sherwood, EPA, Air Docket A–99–06.

[141] The average temperature in Helsinki, Finland, for the month of January is 21° F. The average temperature in Stockholm, Sweden, for the month of Juanuary is 21° F. The average temperature at the University of Michigan in Ann Arbor, Michigan, for the month of January is 24° F. The temperatures reported here are from www.worldclimate.com based upon the Global Historical Climatology Network (GHCN) produced jointly by the National Climatic Data Center and Carbon Dioxide Information Analysis Center at Oak Ridge National Laboratory (ORNL).

[12] Letter from Dr. Barry Cooper to Don Kopinski US EPA, Air Docket A–99–06.

EXHIBIT J

SO_2 oxidation is promoted across a catalyst in a manner very similar to the oxidation of NO, except it is converted at higher rates, with peak conversion rates in excess of 50 percent. The SO_2 oxidation rate for a platinum based oxidation catalyst typical of the type which might be used in conjunction with, or as a washcoat on, a catalyzed diesel particulate filter can vary significantly with exhaust temperature. At the low temperatures typical of some urban driving and the heavy-duty federal test procedure (HD–FTP), the oxidation rate is relatively low, perhaps no higher than ten percent. However at the higher temperatures that might be more typical of highway driving conditions and the Supplemental Emission Test (also called the EURO III or 13 mode test), the oxidation rate may increase to 50 percent or more. These high levels of sulfate make across the catalyst are in contrast to the very low SO_2 oxidation rate typical of diesel exhaust (typically less than 2 percent). This variation in expected diesel exhaust temperatures means that there will be a corresponding range of sulfate production expected across a catalyzed diesel particulate filter.

The US Department of Energy in cooperation with industry conducted a study entitled DECSE to provide insight into the relationship between advanced emission control technologies and diesel fuel sulfur levels. Interim report number four of this program gives the total particulate matter emissions from a heavy-duty diesel engine operated with a diesel particulate filter on several different fuel sulfur levels. A straight line fit through this data is presented in Table III.F–1 below showing the expected total direct PM emissions from a heavy-duty diesel engine on the supplemental emission test cycle.[143] The data can be used to estimate the PM emissions from heavy-duty diesel engines operated on fuels with average fuel sulfur levels in this range.

TABLE III.F–1.—ESTIMATED PM EMISSIONS FROM A HEAVY-DUTY DIESEL ENGINE AT THE INDICATED FUEL SULFUR LEVELS

Fuel sulfur [ppmm]	Supplemental emission test performance	
	Tailpipe PM [b] [g/bhp-hr]	PM increase relative to 3 to 3 ppm sulfur
3	0.003	.....
7 [a]	0.006	100%
15 [a]	0.009	200%
30	0.017	470%
150	0.071	2300%

[a] The PM emissions at these sulfur levels are based on a straight-line fit to the DECSE data; PM emissions at other sulfur levels are actual DECSE data. (Diesel Emission Control Sulfur Effects (DECSE) Program—Phase II Interim Data Report No. 4, Diesel Particulate Filters-Final Report, January 2000. Table C1.) Although DECSE tested diesel particulate filters at these fuel sulfur levels, they do not conclude that the technology is feasible at all levels, but they do note that testing at 150 ppm is a moot point as the emission levels exceed the engine's baseline emission level.

[b] b Total exhaust PM (soot, SOF, sulfate).

Table III.F–1 makes it clear that there are significant PM emission reductions possible with the application of catalyzed diesel particulate filters and low sulfur diesel fuel. At the observed sulfate PM conversion rates, the DECSE program results show that the 0.01 g/bhp-hr total PM standard is feasible for diesel particulate filter equipped engines operated on fuel with a sulfur level at or below 15 ppm. The results also show that diesel particulate filter control effectiveness is rapidly degraded at higher diesel fuel sulfur levels due to the high sulfate PM make observed with this technology. It is clear that PM reduction efficiencies are limited by sulfur in diesel fuel and that, in order to realize the PM emissions benefits sought in this rule, diesel fuel sulfur levels must be at or below 15 ppm. The data further indicates that were the fuel sulfur level set at a 30 ppm average, as some commenters suggested, the PM emissions from the controlled vehicles would be nearly three times the emissions from a vehicle operating on fuel with a 7 ppm average.

c. Increased Maintenance Cost for Diesel Particulate Filters Due to Sulfur

In addition to the direct performance and durability concerns caused by sulfur in diesel fuel, it is also known that sulfur can lead to increased maintenance costs, shortened maintenance intervals, and poorer fuel economy for particulate filters. Diesel particulate filters are highly effective at capturing the inorganic ash produced from metallic additives in engine oil. This ash is accumulated in the filter and is not removed through oxidation, unlike the trapped carbonaceous PM. Periodically the ash must be removed by mechanical cleaning of the filter with compressed air or water. This maintenance step is anticipated to occur on intervals of well over one hundred thousand miles. However, sulfur in diesel fuel increases this ash accumulation rate through the formation of metallic sulfates in the filter, which increases both the size and mass of the trapped ash. By increasing the ash accumulation rate, the sulfur shortens the time interval between the required maintenance of the filter and negatively impacts fuel economy.

2. Diesel NO_X Catalysts and the Need for Low Sulfur Fuel

All of the NO_X exhaust emission control technologies discussed previously in Section III are expected to utilize platinum to oxidize NO to NO_2 to improve the NO_X reduction efficiency of the catalysts at low temperatures or as in the case of the NO_X adsorber, as an essential part of the process of NO_X storage. This reliance on NO_2 as an integral part of the reduction process means that the NO_X exhaust emission control technologies, like the PM exhaust emission control technologies, will have problems with sulfur in diesel fuel. In addition, NO_X adsorbers have the added problem that the adsorption function itself is poisoned by the presence of sulfur. The resulting need to remove the stored sulfur (desulfate) leads to a need for extended high temperature operation which can deteriorate the NO_X adsorber. These limitations due to sulfur in the fuel affect the overall performance and feasibility of the technologies.

a. Sulfur Poisoning (Sulfate Storage) on NO_X Adsorbers

The NO_X adsorber technology relies on the ability of the catalyst to store NO_X as a nitrate (MNO_3) on the surface of the catalyst, or adsorber (storage) bed, during lean operation. Because of the similarities in chemical properties of SO_X and NO_X, the SO_2 present in the exhaust is also stored by the catalyst surface as a sulfate (MSO_4). The sulfate compound that is formed is significantly more stable than the nitrate compound and is not released and reduced during the NO_X release and reduction step (NO_X regeneration step). Since the NO_X adsorber is essentially 100 percent effective at capturing SO_2 in the adsorber bed, the sulfur build up on the adsorber bed occurs rapidly. As a result, sulfate compounds quickly occupy all of the NO_X storage sites on the catalyst

[143] Note that direct emisisons are those pollutants emitted directly from the engine or from the tailpipe depending on the context in which the term is used, and indirect emissions are those pollutants formed in the atmosphere through chemical reactions between direct emissions and other atmospheric constituents.

EXHIBIT J

thereby rendering the catalyst ineffective for NO_X storage and subsequent NO_X reduction (poisoning the catalyst).

The stored sulfur compounds can be removed by exposing the catalyst to hot (over 650°C) and rich (air-fuel ratio below the stoichiometric ratio of 14.5 to 1) conditions for a brief period.[144] Under these conditions, the stored sulfate is released and reduced in the catalyst.[145] While research to date on this procedure has been very favorable with regards to sulfur removal from the catalyst, it has revealed a related vulnerability of the NO_X adsorber catalyst. Under the high temperatures used for desulfation, the metals that make up the storage bed can change in physical structure. This leads to lower precious metal dispersion, or ''metal sintering,'' (a less even distribution of the catalyst sites) reducing the effectiveness of the catalyst.[146] This degradation of catalyst efficiency due to high temperatures is often referred to as thermal degradation. Thermal degradation is known to be a cumulative effect. That is, with each excursion to high temperature operation, some additional degradation of the catalyst occurs.

One of the best ways to limit thermal degradation is by limiting the accumulated number of desulfation events over the life of the vehicle. Since the period of time between desulfation events is expected to be determined by the amount of sulfur accumulated on the catalyst (the higher the sulfur accumulation rate, the shorter the period between desulfation events) the desulfation frequency is expected to be proportional to the fuel sulfur level. In other words for each doubling in the average fuel sulfur level, the frequency and accumulated number of desulfation events are expected to double. We believe, therefore, that the diesel fuel sulfur level must be set as low as possible in order to limit the frequency and duration of desulfation events. Without control of fuel sulfur levels below 15 ppm, we can no longer conclude with any confidence that sulfur poisoning can be controlled without unrecoverable thermal degradation. Some commenters have suggested that the NO_X adsorber technology could meet the NO_X standard using diesel fuel with a 30 ppm average sulfur level. This would imply that the NO_X adsorber could tolerate as much as a four fold increase in desulfation frequency (when compared to an expected seven to 10 ppm average) without any increase in thermal degradation. This conclusion is inconsistent with our understanding of the technology that, with each desulfation event, some thermal degradation occurs. Therefore, we believe that diesel fuel sulfur levels must be at or below 15 ppm in order to limit the number and frequency of desulfation events. Limiting the number and frequency of desulfation events will limit thermal degradation and, thus, enable the NO_X adsorber technology to meet the NO_X standard.

Sulfur in diesel fuel for NO_X adsorber equipped engines will also have an adverse effect on fuel economy. The desulfation event requires controlled operation under hot and net fuel rich exhaust conditions. These conditions, which are not part of a normal diesel engine operating cycle, can be created through the addition of excess fuel to the exhaust. This addition of excess fuel causes an increase in fuel consumption. We have developed a spreadsheet model that estimates the frequency of desulfation cycles from published data and then estimates the fuel economy impact from this event.[147] Table III–F.2 shows the estimated fuel economy impact for desulfation of a NO_X adsorber at different fuel sulfur levels assuming a desired 90 percent NO_X conversion efficiency. The estimates in the table are based on assumed average fuel sulfur levels associated with different sulfur level caps. Note that, although we can estimate the fuel consumption penalty of operation on diesel fuel sulfur levels higher than 15 ppm, this analysis does not consider the higher degree of thermal degradation due to the more frequent desulfation events which are required for operation on these higher sulfur levels.

TABLE III.F–2.—ESTIMATED FUEL ECONOMY IMPACT FROM DESULFATION OF A 90% EFFICIENT NO_X ADSORBER

Fuel sulfur cap (ppm)	Average fuel sulfur (ppm)	Fuel economy penalty (in percent)
500	350	27
50	30	2

TABLE III.F–2.—ESTIMATED FUEL ECONOMY IMPACT FROM DESULFATION OF A 90% EFFICIENT NO_X ADSORBER—Continued

Fuel sulfur cap (ppm)	Average fuel sulfur (ppm)	Fuel economy penalty (in percent)
25	15	1
15	7	<1
5	2	<<<1

The table highlights that the fuel economy penalty associated with sulfur in diesel fuel is noticeable even at average sulfur levels as low as 15 ppm and increases rapidly with higher sulfur levels. It also shows that the use of a NO_X adsorber with a 15 ppm sulfur cap fuel would be expected to result in a fuel economy impact due to the need for desulfation of the catalyst of less than one percent, absent other changes in engine design. However, as discussed in Section G below, we anticipate that other engine modifications could be made to offset this fuel economy impact. For example, a NO_X control device in the exhaust system could allow use of fuel saving engine strategies, such as advanced fuel injection timing, that could be used to offset the increased fuel consumption associated with the NO_X adsorber. The result is that low sulfur fuel enables the NO_X adsorber which, in turn, enables fuel saving engine modifications. The total emission control system fuel economy impact, which we estimate to be zero under a 15 ppm cap program, is discussed below in Section III.G.

Future improvements in the NO_X adsorber technology are expected and needed if the technology is to provide the environmental benefits we have projected today. Some of these improvements are likely to include improvements in the means and ease of removing stored sulfur from the catalyst bed. However because the stored sulfate species are inherently more stable than the stored nitrate compounds (from stored NO_X emissions), we expect that a separate release and reduction cycle (desulfation cycle) will always be needed in order to remove the stored sulfur. Therefore, we believe that fuel with a sulfur level at or below 15 ppm sulfur will be necessary in order to control thermal degradation of the NO_X adsorber catalyst and to limit the fuel economy impact of sulfur in diesel fuel.

b. Sulfate Particulate Production and Sulfur Impacts on Effectiveness of NO_X Control Technologies

The NO_X adsorber technology relies on a platinum based oxidation function

[144] Dou, Danan and Bailey, Owen, ''Investigation of NO_X Adsorber Catalyst Deactivation,'' SAE 982594.

[145] Guyon M. et al, ''Impact of Sulfur on NO_X Trap Catalyst Activity—Study of the Regeneration Conditions'', SAE 982607.

[146] though it was favroable to decompose sulfate at 800°C, performance of the NSR (NO_X Storage Reduction catalyst, *i.e.* NO_X Adsorber) catalyst decreased due to sintering of precious metal.—Asanuma, T. *et al,* ''Influence of Sulfur Concentration in Gasoline on NO_X Storage—Reduction Catalyst'', SAE 1999–01–3501.

[147] Memo from Byron Bunker, to docket A–99–06, ''Estimating Fuel Economy Impacts of NO_X Adsorber De-Sulfurization.''

EXHIBIT J

in order to ensure high NO_X control efficiencies. As discussed more fully in section III.F.1, platinum based oxidation catalysts form sulfate PM from sulfur in the exhaust gases significantly increasing PM emissions when sulfur is present in the exhaust stream. The NO_X adsorber technology relies on the oxidation function to convert NO to NO_2 over the catalyst bed. For the NO_X adsorber this is a fundamental step prior to the storage of NO_2 in the catalyst bed as a nitrate. Without this oxidation function the catalyst will only trap that small portion of NO_X emissions from a diesel engine which is NO_2. This would reduce the NO_X adsorber effectiveness for NO_X reduction from in excess of 90 percent to something well below 20 percent. The NO_X adsorber relies on platinum to provide this oxidation function due to the need for high NO oxidation rates under the relatively cool exhaust temperatures typical of diesel engines. Because of this fundamental need for a catalytic oxidation function, the NO_X adsorber inherently forms sulfate PM when sulfur is present in diesel fuel, since sulfur in fuel invariably leads to sulfur in the exhaust stream.

The Compact-SCR technology, like the NO_X adsorber technology, uses an oxidation catalyst to promote the oxidation of NO to NO_2 at the low temperatures typical of much of diesel engine operation. As discussed above, there are substantial questions regarding the ability of SCR systems to be implemented successfully to meet the requirements finalized today. By converting a portion of the NO_X emissions to NO_2 upstream of the ammonia SCR reduction catalyst, the overall NO_X reductions are improved significantly at low temperatures. Without this oxidation function, low temperature SCR NO_X effectiveness is dramatically reduced making compliance with the NO_X standard impossible. As discussed previously in Section III, platinum group metals are known to be good catalysts to promote NO oxidation, even at low temperatures.[148] Therefore, future Compact-SCR systems would need to rely on a platinum oxidation catalyst in order to provide the required NO_X emission control. This use of an oxidation catalyst in order to enable good NO_X control means that Compact SCR systems will produce significant amounts of sulfate PM when operated on anything but the lowest fuel sulfur levels due to the oxidation of SO_2 to sulfate PM promoted by the oxidation catalyst.

Without the oxidation catalyst promoted conversion of NO to NO_2, neither of these NO_X control technologies can meet the NO_X standard set here. Therefore each of these technologies will require low sulfur diesel fuel to control the sulfate PM emissions inherent in the use of oxidation catalysts. The NO_X adsorber technology may be able to limit its impact on sulfate PM emissions by releasing stored sulfur as SO_2 under rich operating conditions. The Compact-SCR technology, on the other hand, has no means to limit sulfate emissions other than through lower catalytic function or lowering sulfur in diesel fuel. The degree to which the NO_X emission control technologies increase the production of sulfate PM through oxidation of SO_2 to SO_3 varies somewhat from technology to technology, but it is expected to be similar in magnitude and environmental impact to that for the PM control technologies discussed previously in section III.F.1, since both the NO_X and the PM control catalysts rely on precious metals to achieve the required NO to NO_2 oxidation reaction.

Thus, we believe that diesel fuel sulfur levels will need to be at or below 15 ppm in order to apply any of these NO_X control technologies. Without this low sulfur fuel, the NO_X control technologies are expected to create PM emissions well in excess of the PM standard regardless of the engine-out PM levels. Again, as noted with the PM control technologies, test results to date on catalysts with high oxidation potential indicate that were the fuel sulfur level set with a 30 ppm average, as some commenters suggested, the PM emissions from the controlled vehicles would increase nearly three fold over the level expected from fuel with a 7 ppm average, the average fuel sulfur level we would expect from a 15 ppm cap fuel (see Table III.F.1).

3. What About Sulfur in Engine Lubricating Oils?

Current engine lubricating oils have sulfur contents which can range from 2,500 ppm to as high as 8,000 ppm by weight. Since engine oil is consumed by heavy-duty diesel engines in normal operation, it is important that we account for the contribution of oil derived sulfur in our analysis of the need for low sulfur diesel fuel. One way to give a straightforward comparison of this effect is to express the sulfur consumed by the engine as an equivalent fuel sulfur level. This approach requires that we assume specific fuel and oil consumption rates for the engine. Using this approach, estimates ranging from two to seven ppm diesel fuel sulfur equivalence have been made for the sulfur contribution from engine oil.[149] [150] If values at the upper end of this range accurately reflect the contribution of sulfur from engine oil to the exhaust this would be a concern as it would represent 50 percent of the total sulfur in the exhaust under a 15 ppm diesel fuel sulfur cap (with an average sulfur level assumed to be approximately seven ppm). However, we believe that this simplified analysis, while valuable in demonstrating the need to investigate this issue further, overstates the likely sulfur contribution from engine oil by a significant amount due to its inclusion of engine oil lost through the open crankcase system in the estimate of oil consumption to the exhaust.

Current heavy-duty diesel engines operate with open crankcase ventilation systems which ''consume'' oil by carrying oil from the engine crankcase into the environment. This consumed oil is correctly included in the total oil consumption estimates, but should not be included in estimates of oil entering the exhaust system for this analysis, since as currently applied this oil is not introduced into the exhaust. At present we estimate that the majority of lube oil consumed by an engine meeting the 0.1 g/bhp-hr PM standard is lost through crankcase ventilation, rather than through the exhaust. Based on assumed engine oil to PM conversion rates and historic soluble organic fraction breakdowns we have estimated the contribution of sulfur from engine oil to be less than two ppm fuel equivalency. With our action to close the crankcase, coupled with the use of closed crankcase ventilation systems that separate in excess of 90 percent of the oil from the blow-by gases, we believe that this very low contribution of lube oil to sulfur in the exhaust can be maintained. For a further discussion of our estimates of the sulfur contribution from engine oil refer to the final RIA in the docket.

G. Fuel Economy Impact of High Efficiency Control Technologies

The high efficiency emission control technologies expected to be applied in order to meet the NO_X and PM standards involve wholly new system components integrated into engine designs and calibrations, and as such

[148] Platinum group metals include platinum, palladium, rhodium, and other precious metals.

[149] Whitacre, Shawn. ''Catalyst Compatible'' Diesel Engine Oils, DECSE Phase II, Presentation at DOE/NREL Workshop ''Exploring Low Emission Diesel Engine Oils.'' January 31, 2000.

EXHIBIT J

may be expected to change the fuel consumption characteristics of the overall engine design. After reviewing the likely technology options available to the engine manufacturers, we believe that the integration of the engine and exhaust emission control systems into a single synergistic emission control system will lead to heavy-duty vehicles which can meet demanding emission control targets without increasing fuel consumption beyond today's levels.

1. Diesel Particulate Filters and Fuel Economy

Diesel particulate filters are anticipated to provide a step-wise decrease in diesel particulate (PM) emissions by trapping and oxidizing the diesel PM. The trapping of the very fine diesel PM is accomplished by forcing the exhaust through a porous filtering media with extremely small openings and long path lengths.[151] This approach results in filtering efficiencies for diesel PM greater than 90 percent but requires additional pumping work to force the exhaust through these small openings. The additional pumping work is anticipated to increase fuel consumption by approximately one percent.[152] However, we believe this fuel economy impact can be regained through optimization of the engine—PM trap—NO_X adsorber system, as discussed below.

2. NO_X Control Technologies and Fuel Economy

NO_X adsorbers are expected to be the primary NO_X control technology introduced in order to provide the reduction in NO_X emissions envisioned in this rulemaking. NO_X adsorbers work by storing NO_X emissions under fuel lean operating conditions (normal diesel engine operating conditions) and then by releasing and reducing the stored NO_X emissions over a brief period of fuel rich engine operation. This brief periodic NO_X release and reduction step is directly analogous to the catalytic reduction of NO_X over a gasoline three-way catalyst. In order for this catalyst function to occur the engine exhaust constituents and conditions must be similar to normal gasoline exhaust constituents. That is, the exhaust must be fuel rich (devoid of excess oxygen) and hot (over 250°C). Although it is anticipated that diesel engines can be made to operate in this way, it is assumed that fuel economy while operating under these conditions will be worse than normal. We have estimated that the fuel economy impact of the NO_X release and reduction cycle would, all other things being equal, increase fuel consumption by approximately one percent. Again, we believe this fuel economy impact can be regained through optimization of the engine—PM trap—NO_X adsorber system, as discussed below.

In addition to the NO_X release and regeneration event, another step in NO_X adsorber operation may affect fuel economy. As discussed earlier, NO_X adsorbers are poisoned by sulfur in the fuel even at the low sulfur levels mandated here. As discussed in the RIA, we anticipate that the sulfur poisoning of the NO_X adsorber can be reversed through a periodic ''desulfation'' event. The desulfation of the NO_X adsorber is accomplished in a similar manner to the NO_X release and regeneration cycle described above. However it is anticipated that the desulfation event will require extended operation of the diesel engine at rich conditions.[153] This rich operation will, like the NO_X regeneration event, require an increase in the fuel consumption rate and will cause an associated decrease in fuel economy. With a 15 ppm fuel sulfur cap, we are projecting that fuel consumption for desulfation would increase by one percent or less, which we believe can be regained through optimization of the engine-PM trap-NO_X adsorber system as discussed below.

While NO_X adsorbers require non-power producing consumption of diesel fuel in order to function properly and, therefore, have an impact on fuel economy, they are not unique among NO_X control technologies in this way. In fact NO_X adsorbers are likely to have a very favorable NO_X to fuel economy trade-off when compared to other NO_X control technologies like cooled EGR and injection timing retard that have historically been used to control NO_X emissions. Today, most diesel engines rely on injection timing control (retarding injection timing) in order to meet the 4.0 g/bhp-hr NO_X emission standard. For 2004 model year compliance, we expect that engine manufacturers will use a combination of cooled EGR and injection timing control to meet the 2.0 g/bhp-hr NO_X standard. Because of the more favorable fuel economy trade-off for NO_X control with EGR when compared to timing control, we have forecast that less reliance on timing control will be needed in 2004. Therefore, fuel economy will not be changed even at this lower NO_X level.

NO_X adsorbers have a significantly more favorable NO_X to fuel economy trade-off when compared to cooled EGR or timing retard alone, or even when compared to cooled EGR and timing retard together.[154] Current NO_X adsorber data show greater than 90 percent reduction in NO_X emissions over the SET, while only increasing fuel consumption by a very reasonable two percent. Further the data show that, for significant portions of the engine's typical operating range, NO_X control in excess of 98 percent is possible even with engine-out emissions as high as 5 g/bhp-hr.[155] Therefore, we expect manufacturers to take full advantage of the NO_X control capabilities of the NO_X adsorber and project that they will decrease reliance on technologies with a less favorable emissions to fuel economy trade-off, especially injection timing retard, when operating at conditions where the NO_X adsorber performance is significantly greater than 90 percent. We would therefore predict that the fuel economy impact currently associated with NO_X control from timing retard would be decreased by at least three percent. In other words, through the application of advanced NO_X emission control technologies, which are enabled by the use of low sulfur diesel fuel, we expect the NO_X trade-off with fuel economy to continue to improve significantly when compared to today's technologies. This will result in both much lower NO_X emissions, and potentially overall improvements in fuel economy. Improvements could easily offset the fuel consumption of the NO_X adsorber itself and, in addition, the one percent fuel economy loss projected to result from the application of PM filters. Consequently, we are projecting no fuel economy penalty to result from this rule.

3. Emission Control Systems for 2007 and Net Fuel Economy Impacts

We anticipate that, in order to meet the stringent NO_X and PM emission standards set today, the engine manufacturers will integrate engine-based emission control technologies and

[150] This estimate assumes that a heavy-duty diesel engine consumes 1 quart of engine oil in 2,000 miles of operation, consumes fuel at a rate of 1 gallon per 6 miles of operation and that engine oil sulfur levels range from 2,000 to 8,000 ppm.

[151] Typically, the filtering media is a porous ceramic monolith or a metallic fiber mesh.

[152] Engine, Fuel, and Emissions Engineering, Incorporated, ''Economic Analysis of Diesel Aftertreatment System Changes Made Possible by Reduction of Diesel Fuel Sulfur Content,'' December 14, 1999, Air Docket A–99–06.

[154] Zelenka, P. *et al,* Cooled EGR—A Key Technology for Future Efficient HD Diesels, SAE 980190, Society of Automotive Engineers 1998. Figure 2 from this paper gives a graphical representation of how new technologies (including exhaust emission control technologies) can shift the trade-off between NO_X emissions and fuel economy.

[155] ''2007 Diesel Emission Test Program, Initial Test Report,'' December 11, 2000, Air Docket A–99–06, Item IV–A–29.

EXHIBIT J

post-combustion emission control technologies into a single systems-based approach that will fundamentally shift historic trade-offs between emissions control and fuel economy. As outlined in the preceding two sections, individual components in this system will introduce new constraints and opportunities for improvements in fuel efficient control of emissions. Having considered the many opportunities to fundamentally improve these relationships, we believe that it is unlikely that fuel economy will be lower than today's levels and, in fact, may improve through the application of these new technologies and this new systems approach. Therefore, for our analysis of economic impacts in Section V, no penalty or benefit for changes to fuel economy are considered.

H. Review of the Status of Heavy-Duty Diesel NO_X Emission Control Technology

In the NPRM, we provided a detailed technical evaluation of test data and other information that concluded that the proposed program would be technologically feasible for all heavy-duty engines. During the public comment period, we received many comments as well as additional information about the likely status and capability of emission control technology development in the 2007 time frame. To this information we have added our own updated evaluation of test data as well as technical information developed by ourselves and others.

Based on this information, and as discussed in Sections III.E and III.F above, we now have an even higher degree of confidence that manufacturers will be able to meet the new heavy-duty standards. Manufacturers of heavy-duty gasoline engines will apply essentially the same technology that is being developed for light-duty trucks under the Tier 2 program and should not have major problems doing so, especially given the significant available lead time. Regarding diesels, although the technological challenges are somewhat greater than for gasoline engines, we believe that manufacturers will achieve the engine standards adopted today for 2007 and later years, in conjunction with the low sulfur diesel fuel we are also requiring.

As we discussed earlier, there are two primary technologies that diesel engine manufacturers expect to use to meet the standards adopted in today's rule, and they are at different stages of commercial development. Catalyzed diesel PM trap technologies are in widespread fleet testing today, we have shown that there are no serious impediments to the widespread application of this technology to heavy-duty diesel engines that can meet our new standards by 2007, if not earlier. Diesel NO_X adsorber technology, the emission control technology we believe will be used for heavy-duty diesel engines to meet the very low NO_X emission standards adopted today, is less developed relative to PM control technology. Still, as we discussed earlier, we have identified a clear technological pathway to compliance with the NO_X standards using NO_X adsorber technology. While we do not anticipate major obstacles in commercializing these systems by 2007, it is important that the various parties in the industry continue to make good progress in their development of NO_X adsorber technology for heavy-duty diesel engines.

As a mechanism for monitoring and evaluating this technological progress, we believe it will be important to publicly reassess the status of heavy-duty diesel NO_X adsorber systems on an ongoing basis. To accomplish this, we will conduct regular biennial reviews of the status of heavy-duty NO_X adsorber technology. For each review, we will collect and analyze information from engine manufacturers, NO_X adsorber manufacturers, our own testing, and other sources. At the end of each review cycle, we will release (and post on the Web) a report discussing the status of the technology and any implications for the heavy-duty engine emission control program. We will release the first report by December 31, 2002 and subsequent reports at the end of each second year through December 31, 2008. This biennial process is similar to that used by the State of California to monitor and evaluate their emission control programs.

IV. Our Program for Controlling Highway Diesel Sulfur

With today's action, we are requiring substantial reductions in highway diesel fuel sulfur levels nationwide, because sulfur significantly inhibits the ability of the diesel emission control devices to function which are necessary to meet the emission standards finalized today. With the highway diesel fuel sulfur standard we are finalizing today, we have concluded that there will be technology available to achieve the reductions required by the stringent emission standards we are implementing for model year 2007 and later heavy-duty engines.

In developing the provisions of the fuel program being adopted today, we identified several goals that we want the program to achieve. First, we must ensure that there will be an adequate supply of highway diesel fuel for all vehicles. Second, we must ensure that low sulfur diesel fuel will be readily available nationwide for the 2007 and later model year heavy-duty vehicles that need it. Finally, we want to ensure a smooth transition to low sulfur fuel.

In the NPRM, we proposed that refiners be required to start producing all of their highway diesel fuel at the 15 ppm sulfur level beginning in 2006. We also requested comment on a range of options for transitioning to the low sulfur diesel fuel over time. With regard to the programmatic goals noted above, the proposed approach, which would have required all highway diesel fuel to meet the 15 ppm sulfur standard in 2006, guaranteed availability of the low sulfur diesel fuel throughout the nation. However, many commenters stated concerns that the proposed program would not ensure adequate overall supplies of highway diesel fuel, especially if some refiners chose not to continue producing highway diesel fuel to avoid the changes needed to meet the low sulfur levels.

The final diesel fuel program we are adopting today includes flexibilities for the refining industry as a whole, as well as additional flexibilities for refiners experiencing hardship circumstances. First, the program gives refiners a temporary compliance option for low sulfur diesel fuel beginning in mid-2006. The final program also includes additional flexibilities for refineries located in certain western states (the Geographic Phase-In Area (GPA) [156]), provisions for qualifying small refiners, and a general hardship provision for which any refiner may apply under certain conditions. These flexibilities ensure that the vast majority of refiners nationwide can fully comply at the earliest possible date while avoiding an excessive burden on a subset of refiners. The following section details each of the requirements of the highway diesel fuel program for refiners and importers, summarizes the analyses we have performed on the impacts of the temporary compliance option being adopted today, and describes additional information we have received that supports the changes made to the proposed program. Section VII provides additional information about the

[156] As defined in the Tier 2 final rulemaking (see 65 FR 6698, February 10, 2000), the GPA encompasses the states of Alaska, Colorado, Idaho, Montana, New Mexico, North Dakota, Utah and Wyoming. Note that minor changes to this area are currently under consideration. Any such changes subsequent to today's rule are intended to be carried over into today's rule as well.

EXHIBIT J

compliance and enforcement provisions that will accompany these requirements.

We believe the highway diesel fuel program we are adopting today meets all of the programmatic goals noted above. We believe that the final program will ensure that the overall supply of highway diesel fuel will be sufficient for all vehicles. To the extent there may have been supply concerns with a complete fuel turnover to low sulfur diesel in 2006 as some commenters have suggested, the flexibilities for refiners contained in the final program will serve as a ''safety valve'' by allowing up to 25 percent of the highway diesel fuel to remain at the current 500 ppm sulfur standard and providing additional time, if needed, for some refiners to fully convert over to low sulfur fuel. The combination of flexibilities provided to refiners in today's final rule should eliminate any concerns about the potential for supply shortfalls of highway diesel fuel. The final diesel fuel program is carefully structured so that we are confident there will be widespread availability of low sulfur fuel across the nation for 2007 and later model heavy-duty vehicles. In this way, the important health benefits of this program to people throughout the country can be achieved expeditiously, at a reasonable cost, while minimizing the burden on the affected industries.

This section also summarizes our technical feasibility analysis of the low sulfur highway diesel fuel program, and the impact of the program on other fuel properties and specialty fuels. Finally, the following section describes how state programs will be affected by today's action including a provision that allows the State of Alaska the option of developing an alternative transition plan for implementing low sulfur fuel.

A. Highway Diesel Sulfur Standards for Refiners and Importers

The requirements of the highway diesel fuel sulfur control program will become effective in time to be available with the introduction of the first heavy-duty engines meeting the model year 2007 and later engine standards we are adopting today. The following paragraphs describe the requirements, standards, and deadlines that apply to refiners and importers of highway diesel fuel and the options available to all refiners.

1. *Standards and Deadlines That Refiners and Importers Must Meet*

As described earlier in Section III.H. above, the new standards being adopted today for heavy-duty engines will begin with the 2007 model year. With today's action, we are adopting specific dates when fuel intended to be marketed as low sulfur diesel fuel must be produced at the refinery, distributed at the terminal level, and marketed at the retail level. Refiners and importers are required to produce highway diesel fuel meeting the 15 ppm sulfur standard beginning June 1, 2006.[157] At the terminal level, highway diesel fuel sold as low sulfur fuel is required to meet the 15 ppm sulfur standard beginning July 15, 2006. For retail stations and wholesale purchaser-consumers, highway diesel fuel sold as low sulfur fuel must meet the 15 ppm sulfur standard by September 1, 2006.

In the NPRM, we proposed a set of compliance dates slightly earlier than the dates contained in today's final rule. Under the proposal, refiners, terminals and retailers would have had to begin producing low sulfur diesel fuel by April 1, 2006, May 1, 2006 and June 1, 2006, respectively. Several commenters pointed out that the April introduction date for refiners occurred at the same time refiners would be changing over from winter to summer gasoline to comply with Reid Vapor Pressure (RVP) requirements. They recommended that the introduction of low sulfur diesel fuel be delayed for a couple of months to provide refiners and the distribution system the opportunity to focus on the two conversions separately and ensure that each occurs as designed. Commenters also suggested that we extend the time period between the refinery and downstream deadlines to better allow for the time it may take the distribution system to make a complete transition to the 15 ppm sulfur level.

In response to these concerns, today's action provides a few additional months for introduction of the low sulfur diesel fuel compared to the NPRM and provides an additional month between the refinery and retail compliance dates, to provide a smoother transition through the distribution system. We believe the additional time provides appropriate relief for the refiners, while still assuring that low sulfur diesel fuel will be available at the retail level no later than September 1, 2006. This schedule will allow manufacturers to introduce 2007 and later model year diesel engines and vehicles as early as September 1, 2006. While a slight delay from the dates of the proposal, the Agency does not believe this delay will place any undue burden on the engine manufacturers. Historically, new heavy-duty vehicle models were introduced on or around January 1 (of the same calendar year as the model year). Only recently, manufacturers have begun introducing some model lines earlier, particularly light heavy-duty vehicles.

In the NPRM, we proposed that all highway diesel fuel be required to comply with the 15 ppm sulfur standard starting in 2006. Today's program includes a combination of flexibilities available to refiners to ensure a smooth transition to low sulfur highway diesel fuel. Refiners can take advantage of a temporary compliance option, including an averaging, banking and trading component, beginning in June 2006 and lasting through 2009, with credit given for early compliance before June 2006. Under this option, up to 20 percent of highway diesel fuel may continue to be produced at the existing 500 ppm sulfur maximum standard, though it must be segregated from 15 ppm fuel in the distribution system, and may only be used in pre-2007 model year heavy-duty vehicles. We are providing additional hardship provisions for small refiners to minimize their economic burden in complying with the 15 ppm sulfur standard and giving additional flexibility to refiners subject to the Geographic Phase-in Area (GPA) provisions of the Tier 2 gasoline sulfur program, which will allow them the option of staggering their gasoline and diesel investments. Finally, we are adopting a general hardship provision for which any refiner may apply on a case-by-case basis under certain conditions. These hardship provisions, coupled with the temporary compliance option, will provide a ''safety valve'' allowing up to 25 percent of highway diesel fuel produced to remain at 500 ppm for these transitional years to effectively address the concerns over highway diesel fuel supply.

It should be noted that the requirements of the fuel program described below apply to refiners and importers only.[158] We are not adopting any retailer availability requirements

[157] Highway diesel fuel (referred to as motor vehicle diesel fuel in the regulatory language to be consistent with language in existing laws and regulations) includes any diesel fuel or any distillate product that is used, intended for use, or made available for use as a fuel in highway diesel vehicles or engines that are subject to the standards finalized today. However, kerosene or other distillates such as JP–8 are only considered to be highway diesel fuel and thus subject to our program at the point in the production or distribution system that they are either designated as such, or otherwise used, intended for use, or made available for use in highway diesel vehicles. Thus, if refiners do not designate these other distillates as highway diesel fuel, they are not subject to the 15 ppm sulfur standard.

[158] As described above, distributors and retailers marketing low sulfur diesel fuel have deadlines for compliance with the sulfur standards, as well as other requirements such as pump labeling. Section VII of today's action provides further details on the downstream requirements for distributors and retailers.

EXHIBIT J

with these provisions. In other words, we are not requiring that diesel retailers sell the 15 ppm fuel. Rather, retailers may sell 15 ppm sulfur diesel fuel, 500 ppm sulfur diesel fuel, or both. We believe the program being adopted today for refiners and importers will ensure that adequate supplies of low sulfur diesel fuel are available throughout the nation. The voluntary compliance and hardship provisions have been designed with a required level of production that we believe will ensure that 15 ppm fuel is distributed widely through pipelines and at terminals throughout the country without the need for a retailer availability requirement. Our analysis supporting the design of these provisions can be found in Chapter IV of the RIA for today's action.

2. *Temporary Compliance Option for Refiners and Importers*

We believe there are several advantages to allowing some flexibility in the early years of the program such that not all of the highway diesel fuel pool must be converted to low sulfur diesel fuel at one time. First, some commenters expressed concerns over adequate supplies of highway diesel fuel if the entire pool converted to low sulfur diesel fuel in 2006, because they believe some refiners might produce less total highway diesel fuel volume or choose to leave the highway diesel fuel market altogether. Allowing the temporary compliance option lowers this concern because a portion of the highway diesel pool can remain at the current 500 ppm sulfur standard, if necessary, providing additional time for the market to adjust. This portion of the highway diesel pool that refiners choose to delay will likely be the portion that is more costly for them to desulfurize and, thus, most likely to raise concerns with respect to shortfalls. Second, a temporary compliance option can benefit refiners by reducing the fuel production costs in the early years of the program, because refiners are able to spread out their capital investments. The option also benefits refiners by spreading out the industry-wide demand for engineering and construction resources over several years, and also by allowing more time between the gasoline sulfur and diesel sulfur compliance dates. Third, refiners that are able to delay investment could attain lower costs for such equipment as technology improvements are realized during that time and as refiners see how well the desulfurization technologies achieve the 15 ppm sulfur standard.

The primary emissions benefits of low sulfur highway diesel fuel are the emissions reductions that will occur over time as new vehicles designed to meet the emission standards adopted today are introduced into the vehicle fleet. Consequently, in the NPRM we requested comment on several options that would allow refiners and importers to phase in the production of low sulfur highway diesel fuel. With today's action, we are adopting a temporary compliance option for refiners and importers that will allow them to produce less than 100 percent of their highway diesel fuel at the 15 ppm sulfur level. Refiners and importers may choose to participate in the compliance option on a refinery-by-refinery basis. A refiner must demonstrate compliance with the compliance option on an annual basis. Refiners with special financial hardships have additional flexibility provisions, which are described further in Section IV.C.

We believe today's temporary compliance option in combination with the hardship provisions discussed in Section IV.C. has the potential to provide flexibility to more than half of all U.S. refineries by allowing up to 25 percent[159] of the highway diesel fuel volume in the country to continue to be produced at the current sulfur level of 500 ppm. We estimate that refiners will be able to save as much as $1.7 billion over the duration of the optional compliance program compared to the proposed requirement that all highway diesel fuel comply with 15 ppm sulfur in 2006. Much, but not all, of this potential savings will be offset by increased costs in the distribution system. We project that in total a small overall savings should result from refiners taking advantage of the temporary compliance option.

Under the temporary compliance option finalized today, a refinery may produce up to 20 percent of its total highway diesel fuel at the existing highway diesel fuel sulfur standard of 500 ppm, determined on an annual basis. The remaining 80 percent of the highway diesel fuel produced at that refinery during the year must meet a sulfur standard of 15 ppm.[160] As part of this temporary compliance option, a PADD-based averaging, banking, and trading (ABT) program will be available. Figure IV–1 presents the five PADDs into which the United States is divided.[161] For example, a refinery could produce more than 80 percent of its highway diesel fuel as low sulfur diesel fuel and generate credits based on the volume of highway diesel fuel produced at 15 ppm that exceeded the 80 percent requirement. Within that same PADD (within the limits noted below for California, Alaska, Hawaii, and any state with an EPA-approved waiver from the federal program), these credits may be averaged with another refinery owned by that refiner, banked for use in future years, or sold to another refinery.

BILLING CODE 6560–50–P

[159] Up to 5 percent of which is small refiner production.

[160] We are aware that today there are refiners that produce one grade of diesel fuel for both highway and off-highway purposes, where dye is added by parties downstream if it is to be sold as off-highway diesel fuel. To the extent possible, we do not want to interfere with this practice. Consequently, for purposes of determining compliance with these optional requirements, a refiner producing all 15 ppm fuel may include the entire volume it produces in the calculation. Furthermore, a refiner producing all 500 ppm fuel must count any diesel fuel produced with a sulfur content of 500 ppm or less unless it has been dyed by the refiner to be used as nonroad diesel fuel. A refiner would only include kerosene in its volume calculation if the kerosene is less than 500 ppm sulfur content and the kerosene is blended at the refinery into non-dyed fuel with a sulfur content of less than 500 ppm.

[161] The Department of Energy divides the United States into five Petroleum Administrative Districts for Defense, or PADDs. The states encompassed by each of the five PADDs are defined in the Code of Federal Regulations at Title 40, § 80.41.

EXHIBIT J

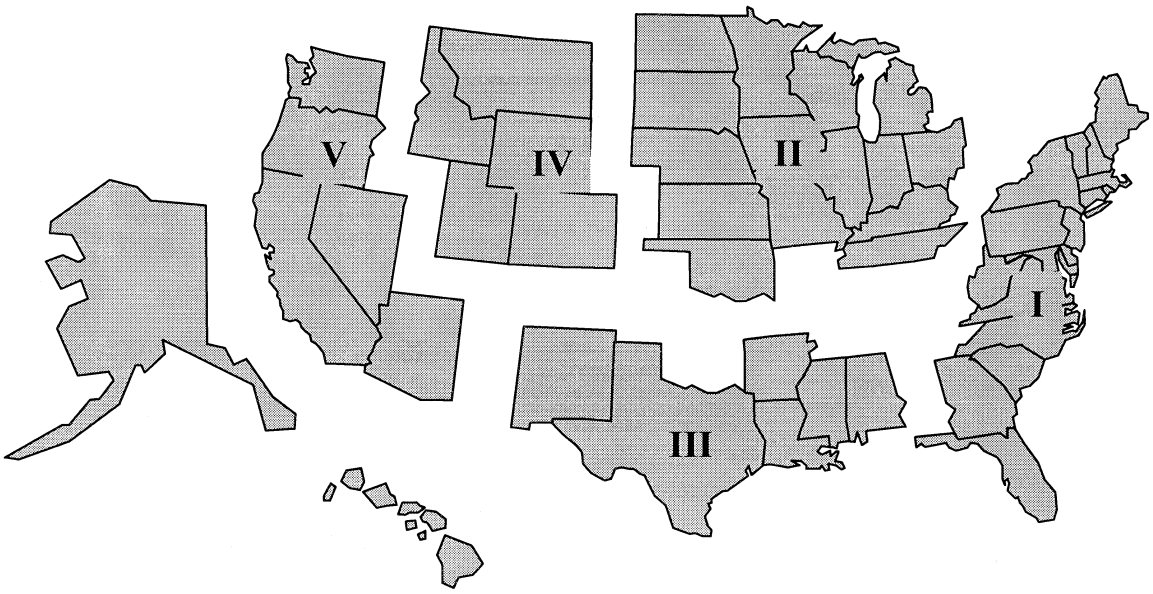

Figure IV-1. Petroleum Administrative Districts for Defense (PADDs)

BILLING CODE 6560–50–C

Also, a refinery may produce less than 80 percent of its highway diesel fuel at the 15 ppm sulfur level, as long as it obtains enough credits from another refinery within the PADD to offset the volume of 500 ppm sulfur fuel produced that exceeded the 20 percent of highway diesel fuel allowed to be produced at the 500 ppm sulfur level. As noted above, any credit trading will be limited to those refineries within the same PADD (within the limits noted below for California, Alaska, Hawaii, and any state with an EPA-approved waiver from the federal program). This restriction is necessary to limit the possibility that any area of the country is dominated by refineries complying via purchases of credits and, thus, producing a small volume of low sulfur diesel fuel, which could lead to concerns that the low sulfur diesel fuel would not be sufficiently available throughout the country.

Based on an extensive analysis which incorporates the hardship provisions and GPA refiner provisions discussed in Section IV.B. and C., we have chosen a level of 80 percent to have confidence that there will be widespread availability of 15 ppm fuel throughout the United States. Given the requirements of today's program, we believe that all pipelines are likely to carry the 15 ppm fuel. Pipelines that may be able to carry only one grade of highway diesel fuel are likely to carry 15 ppm as the majority diesel fuel in the market.[162] Those that are able to carry more than one grade of highway diesel fuel will facilitate the distribution of the remaining 500 ppm fuel. In addition, to ensure widespread availability of low sulfur diesel fuel throughout the nation, we have found it necessary to set the 15 ppm production threshold high enough so that there is a sufficient geographic scattering of refineries producing low sulfur diesel fuel around the country. At a lower threshold, there could be isolated regions of the country where 15 ppm fuel would not be available in sufficient quantities.

We have analyzed the refinery/pipeline distribution system in the United States in the context of the small refiner hardship and other provisions of the rule and believe a 80 percent temporary compliance option level for 15 ppm is necessary to achieve widespread availability and avoid shortages in specific areas. At levels below an 80 percent level, we would have concerns over whether 15 ppm sulfur diesel fuel would be the primary highway diesel fuel distributed through pipelines and whether the low sulfur diesel fuel would be available to all areas of the country in sufficient quantities. The reader is directed to Chapter IV of the RIA for today's action for our complete analysis supporting the development of the temporary compliance option.

[162] Today, many pipelines carry only one grade of distillate (*e.g.,* only 500 ppm sulfur high diesel fuel) rather than both 500 ppm sulfur highway fuel and off-highway fuel which has even higher levels of sulfur (*e.g.,* on the order of 3,000 ppm).

While we have set the minimum requirement under the compliance option at 80 percent, we believe most refineries will focus on production of one grade or the other. We expect that certain refineries will find it more economically advantageous to install the necessary equipment to produce all of their highway diesel fuel at the 15 ppm sulfur level and generate credits. Conversely, other refineries may find it advantageous to continue producing all of their highway diesel fuel at the 500 ppm sulfur fuel through the period of the compliance option, by obtaining credits to demonstrate compliance. This will provide additional time for those refiners that have not converted to low sulfur fuel. This will allow refiners to spread out their capital investments and provide more time to arrange for engineering and construction resources. In addition, the refiners that are able to delay investment could attain lower costs for such equipment as technology improvements are realized during that time and as refiners see how well the range of desulfurization technologies works to achieve the 15 ppm sulfur standard.

Foreign refiners may choose to participate in the temporary compliance option. For purposes of determining compliance with the low sulfur diesel requirements, foreign refiners must demonstrate compliance based on the amount of highway diesel fuel they import into the United States. Therefore, a given foreign refiner must demonstrate that at least 80 percent of the highway diesel fuel it imported into each PADD

EXHIBIT J

meets a 15 ppm sulfur level, or show that it has enough credits from other refiners in the PADD into which it imported the fuel to cover the volume of fuel below the 80 percent requirement. Foreign refineries may also generate credits if they exceed the 80 percent requirement in a given PADD, and may sell those credits within the same PADD. A foreign refiner may also choose to not participate in the temporary compliance option and, as described below, let the fuel importer be the party which demonstrates compliance.

Importers of highway diesel fuel (i.e., companies that import fuel but are not solely refiners) may also participate in the temporary compliance option. Importers must demonstrate that at least 80 percent of the highway diesel fuel imported into each PADD (within the limits noted below for California, Alaska, Hawaii, and any state with an EPA-approved waiver from the federal program) meets a 15 ppm sulfur level, or show that they have enough credits from other refiners in the PADD into which the fuel is imported to cover the volume of fuel below the 80 percent requirement. Importers may also generate credits if they exceed the 80 percent requirement in a given PADD. Importers that import highway diesel fuel from foreign refiners that are participating in the temporary compliance option must exclude the volume of fuel purchased from those refiners in their compliance calculations or credit generation calculations.

Because we expect most refineries to choose to produce fuel either all at the 15 ppm sulfur level or all at the 500 ppm sulfur level, credits will be generated by some refiners and desired by others. Thus, the ABT program will play an important part in achieving overall compliance. The details of the ABT program are described below.

a. Generating Credits

Beginning on June 1, 2006 and continuing through December 31, 2009, refineries and importers may generate credits based on the volume of low sulfur diesel fuel produced above the required percentage (i.e., 80 percent). One credit will be generated for every gallon of highway diesel fuel produced at 15 ppm sulfur that exceeds the 80 percent requirement. Credits will be calculated on a calendar-year basis. For example, if a refinery produces 10 million gallons of highway diesel fuel in 2007, it must produce 80 percent of its highway diesel volume (8 million gallons) as low sulfur during 2007. If the refinery actually produces 100 percent of its highway diesel fuel as low sulfur during 2007, it can generate credits based on the volume of the ''extra'' 20 percent of low sulfur fuel it produced above the required minimal percentage—that is, two million gallons of credits. Because the requirements for low sulfur fuel begin in the middle of 2006, a refinery will generate credits in 2006 based on the volume of low sulfur fuel produced beginning June 1, 2006 that exceeds 80 percent of the highway diesel fuel produced at its facility between June 1, 2006 and December 31, 2006. Once credits are generated by a refinery, they may be used by the refinery for averaging purposes with other refineries owned by the same refiner, traded to another refinery, or banked for use in future calendar year averaging or trading. Credits may only be used in the PADD in which they are generated, with the further limitations on credit generation and use in PADD V noted below for California, Alaska, and Hawaii.

Refineries may no longer generate credits after December 31, 2009. Beginning January 1, 2010, every refinery must either comply with the low sulfur diesel fuel requirements by (1) producing 100 percent of its highway diesel fuel at the 15 ppm sulfur level or (2) by using credits through May 31, 2010 to demonstrate compliance with the 100 percent requirement, provided that banked credits are available to the refinery (described in more detail below). Starting June 1, 2010, all refineries must produce 100 percent of their highway diesel fuel as low sulfur fuel (without the use of credits).

Finally, early credits, or credits from low sulfur fuel produced at a refinery prior to June 1, 2006, may be generated, but only under limited circumstances. Unlike in the Tier 2 program, where significant emission benefits accrued with the early introduction of low sulfur gasoline, very little emission benefit (only a small reduction in sulfate PM emissions from the in-use fleet) will result from the early introduction of 15 ppm diesel fuel. Consequently, the main purpose in allowing early credits under the diesel program is to smooth program implementation beginning June 1, 2006, by allowing a pool of credits to be available upon program startup. By allowing the generation of early credits, both purchasers and sellers of credits can have confidence in the legitimacy of the credits traded, which, in turn, allows for the purchaser to have increased confidence in their ability to rely on the ABT program for compliance. Consequently, beginning June 1, 2005 we will allow refineries to generate credits for any volume of highway diesel fuel produced which meets the 15 ppm cap. Any refiner that chooses to do so may bank these credits for later use during the compliance option years, or may trade them to other refineries within the same PADD for use during the compliance option years. The one restriction placed on the generation of these credits is that refiners will have to demonstrate that the 15 ppm fuel produced early is segregated in the distribution system and not commingled with current 500 ppm sulfur fuel. Only that volume that the refiner verifies was actually sold as 15 ppm fuel at retail or into centrally-fueled fleets will be eligible for early credits.

Providing refiners with an incentive to produce diesel fuel complying with the 15 ppm cap earlier than required will not only instill confidence in the ABT program under the temporary compliance option, but will also provide both refiners and the distribution system the opportunity to gain valuable experience prior to the start of the program with producing and distributing fuel meeting the 15 ppm cap. We believe that allowing early credit generation for one year prior to the start of the program will provide the opportunity for the generation of sufficient early credits to provide refiners with the program implementation flexibility they will need. If we allowed early credits to be generated in this manner for a longer time period, we are concerned that the significant amounts of early credits that could be generated could compromise availability of 15 ppm fuel at the startup of the program. Use of these credits after June 1, 2006 could affect the availability of low sulfur highway diesel fuel across the country when the 2007 model year heavy-duty engines are introduced in the market, because the amount of 500 ppm fuel could significantly exceed the 20 percent threshold allowed under our temporary compliance option.

The only situation in which we will allow for the generation of credits prior to June 1, 2005 is if a refiner demonstrates that the fuel will be used in vehicles certified to meet the 2007 particulate matter standard being adopted today for heavy-duty engines (0.01 g/bhp-hr) or in vehicles with retrofit technologies that achieve emission levels equivalent to the 2007 NO_X or PM standard verified as part of a retrofit program administered by EPA or a state. (Refer to section I.C.7 for more discussion on retrofit programs.) Under this situation, we will have confidence that emission benefits are in fact accruing early, along with the fuel sulfur credits. The early credit provision of this fuel program will complement the provisions that encourage the

EXHIBIT J

introduction of cleaner vehicles earlier than the 2007 model year, as discussed in Section III.D.

b. Using Credits

If a refinery does not meet the 80 percent minimum requirement for low sulfur highway diesel fuel with actual production at that refinery, the refinery will be able to use credits to demonstrate compliance with the 80 percent requirement. The use of credits is limited to credits generated by refineries within the same PADD (within the limits noted below for California, Alaska, Hawaii, and any state with an EPA-approved waiver from the federal program). Under the temporary compliance option, for every gallon of 500 ppm sulfur fuel produced by a refinery that exceeds the maximum allowed limit of 20 percent, the refinery must obtain one credit from another refinery within the same PADD or use banked credits (that were generated within the same PADD).

Although credits will not officially exist until the end of the calendar year (based on the generating refinery's actual low sulfur fuel production for that calendar year), refineries may contract with each other for credit sales prior to the end of the year, based on anticipated production. The actual trading of credits will not take place until the end of the year. All credit transfer transactions will have to be concluded by the last day of February after the close of the annual compliance period and each refinery must submit documentation (as described in Section VII.E.) demonstrating compliance with the appropriate volume of low sulfur highway diesel fuel. For example, a refinery that wishes to purchase credits from another refinery to comply with the 2007 required percentage of low sulfur fuel can do so based on the generating refinery's projections of low sulfur fuel production. By the end of February 2008, both the credit-purchasing refinery and the credit-selling refinery must reconcile the validity of the credits, and demonstrate compliance with the 80 percent requirement. As noted earlier, at the beginning of the program, the initial compliance period will begin on June 1, 2006 and end on December 31, 2006. For this initial period, refineries must submit documentation, by February 28, 2007, demonstrating compliance with the appropriate levels of low sulfur highway diesel fuel for the period between June 1, 2006 and December 31, 2006.

Because there could be situations where a refinery planning to use credits to comply with the minimum percentage of fuel required comes up short at the end of the year, we are adopting provisions that allow a limited amount of carryover, or ''credit deficits.'' A refinery that does not meet the required percentage of low sulfur fuel production in a given year will be allowed to carry forward a credit deficit for one year, as long as the deficit does not exceed five percent of its annual highway diesel fuel production. However, the refinery will have to make up the credit deficit and come into compliance with the required low sulfur production percentage in the next calendar year, or the refinery will be in violation of the program requirements. This provision is intended to give some relief to refineries faced with an unexpected shutdown or that otherwise are unable to obtain sufficient credits to meet the required percentage of low sulfur fuel production.

With regard to credit trading, any person can act as a broker in facilitating credit transactions, whether or not such person is a refiner and/or importer, so long as the title to the credits are transferred directly from the refinery generating the credits to the refinery purchasing the credits. Whether credits are transferred directly from the generating refinery to the purchasing refinery, or through a broker, the refinery purchasing the credits should have sufficient information to fully assess the likelihood that credits are valid. Any credits that are traded to another refinery may, in turn, be traded to another refinery; however, the credits cannot be traded more than twice. We believe this provision is necessary because repeated transfers of credits would significantly reduce our ability to verify the validity of credits.

c. How Long Will Credits Last?

The goal of the ABT provisions is to provide additional flexibility to refiners in the early years of the low sulfur diesel fuel program. After the first few years of the program, there will be a significantly greater proportion of after-treatment-equipped vehicles in the fleet. It will be important to ensure a full transition to the new low sulfur fuel to prevent misfueling of those vehicles and preserve the environmental benefits of the program. Therefore, the ability of refineries to generate credits will end on December 31, 2009. Refineries will be allowed to use any available banked credits, including early credits, for fuel produced through May 31, 2010. Any remaining credits not used for the compliance period until May 31, 2010 will expire. Beginning June 1, 2010, all refineries must produce 100 percent of their highway diesel fuel at the 15 ppm sulfur level without the use of credits, and the ABT program will end.

d. Additional Limitations on Credit Trading for Some States

At this time we are adopting a low sulfur highway diesel fuel program that will apply throughout the United States, with trading of credits limited to those refineries located within the same PADD. Although we are adopting a diesel fuel program that currently will apply nationwide, it is possible that the State of California, or some other state, may adopt in the future a different highway diesel fuel program than that adopted today.[163] To assure that adequate supplies of low sulfur diesel fuel will be available throughout all regions of the country, we are adopting provisions that do not allow refineries located in states with a state-approved 15 ppm highway diesel sulfur program to participate in the credit program. In other words, credit trading is limited only to those refineries complying with the federal program. For example, without such provisions, if California were to adopt its own state program requiring the production of 15 ppm diesel fuel, we are concerned that it might be possible for California refineries to generate enough credits such that areas outside of California in PADD V are dominated by the production of 500 ppm sulfur diesel fuel, with little or no 15 ppm fuel available. This would be problematic for the model year 2007 and later heavy-duty engines designed to be operated on low sulfur fuel. The reader is directed to Chapter IV of the RIA for today's action for our complete analysis supporting the development of the temporary compliance option.

As discussed in Section IV.F. of this preamble, the State of Alaska, which is a part of PADD V, will have the opportunity to develop, and submit to us for approval, an alternative transition plan for implementing the low sulfur highway diesel fuel program. Such a plan will allow Alaska to develop a transition program tailored to its isolated market. If, for some reason, Alaska does not submit an alternative plan, or we do not approve the plan submitted by Alaska, then the federal program described in today's action will apply. In the event we do not approve an alternative plan for Alaska, based on our analysis of the likely response of refineries in Alaska to the temporary compliance option and because its fuel distribution system is essentially isolated from the rest of PADD V, we are

[163] See Section IV.F. for a discussion of preemption of state diesel sulfur requirements.

EXHIBIT J

concerned that all of the fuel offered for sale in Alaska could be 500 ppm sulfur fuel if refineries in Alaska were allowed to purchase credits from other PADD V refineries. For this reason, under today's program, refineries in Alaska will be allowed to generate credits as described earlier. However, they may only sell credits to, or purchase credits from, other refineries in or importers of fuel to Alaska. We believe this will provide assurance that low sulfur highway diesel fuel will be sufficiently available in Alaska and will also reduce the chance that credits from Alaska will result in significantly less low sulfur diesel fuel in PADD V areas outside of Alaska. Again, these default provisions of the national program will only be effective in the event that we do not approve an alternate transition plan for Alaska.

Hawaii is in a similar situation to Alaska with regard to fuel distribution. Hawaii, which is part of PADD V, is an isolated market and we have similar concerns with regard to whether low sulfur diesel fuel would be available in Hawaii if the two refineries currently operating were able to purchase credits from other PADD V refineries and produce all 500 ppm sulfur fuel. For this reason, under today's program, the refineries in Hawaii will be allowed to generate credits as described earlier. However, they may only sell credits to, or purchase credits from, other refineries in or importers of fuel to Hawaii. We believe this will ensure that low sulfur highway diesel fuel will be available in Hawaii.

3. What Information Must Refiners/Importers Submit to Us?

To ensure a smooth transition to the program and to evaluate compliance once the program has begun, we are requiring refiners and importers to submit a variety of information to us. Section VII.E of this document and the regulatory language for today's action provide detailed description of the information that must be submitted and the dates when such submittals are due.[164]

First, refiners and importers that currently or in 2006 expect to produce or supply highway diesel fuel are required to register with us by December 31, 2001. This will inform us on the universe of refiners that we expect to participate in the highway diesel market once the program begins.

Second, to help facilitate the market for credit trading under the temporary compliance option, any refiner or importer planning to produce or import highway diesel in 2006, is required to submit to us an annual pre-compliance report. Refiners and importers are required to submit these annual pre-compliance reports from 2003 through 2005. These reports must contain estimates of the volumes of 15 ppm sulfur fuel and 500 ppm sulfur fuel that will be produced at each refinery, and, for those refineries planning to participate in the trading program, a projection of how many credits will be generated or must be used by each refinery. These pre-compliance reports must also contain information outlining each refinery's timeline for compliance and provide information regarding engineering plans (e.g., design and construction), the status of obtaining any necessary permits, and capital commitments for making the necessary modifications to produce low sulfur highway diesel fuel. Based on the information submitted by refiners and importers, we plan to issue an annual report that summarizes, in a way that protects the confidentiality of individual refiners and importers, the information contained in the pre-compliance reports. Our annual report will provide information, summarized and aggregated on a PADD basis, describing the volumes of 15 ppm and 500 ppm highway diesel planned to be produced, and estimates of the number of credits that refineries expect to generate or use. We believe this information will be important to refiners as they make plans for complying with the temporary compliance option. For example, this information will be useful in giving refiners a better indication of the potential market for credits and availability of credits in their PADD. To prevent the release of confidential information, our annual report will not contain any information on individual refinery compliance plans.

Third, refiners and importers are required to submit annual compliance reports that demonstrate compliance with the requirements of this final rule. The first annual compliance report is due by the end of February 2007 (for the period of June 1, 2006 through December 31, 2006) and is required annually through February 2011. The reports must show, on a refinery basis, the volumes of 15 ppm and 500 ppm sulfur highway diesel fuel produced at each refinery during the compliance period, the number of credits used (or generated) at each refinery to demonstrate compliance with the 80 percent requirement for low sulfur diesel fuel, and the sources of the credits used. The information submitted in the annual compliance reports must be segregated by PADD.

4. Impacts of the Highway Diesel Fuel Program

Based on analyses we have performed, as described in more detail below, we believe the temporary compliance provisions contained in today's final rule will assure adequate supplies of highway diesel fuel, will provide flexibility for refiners, and should result in lower costs for both refiners and consumers. In addition, we believe the temporary compliance provisions as adopted today will ensure sufficient availability of low sulfur highway diesel fuel to new vehicle owners who need it without the need for a retailer availability requirement, and should not lead to significant levels of misfueling and the associated loss of emission benefits. We have analyzed each of these issues in developing the final fuel program. A summary of our analyses and the conclusions we have drawn are discussed below. A detailed description of these analyses are contained in the RIA for today's action. In addition, a complete list of the comments related to a possible phase-in program and our response to those comments is included in the Response to Comments document for this final rule.

a. Ensures Adequate Supplies of Highway Diesel Fuel

We received several comments on the NPRM fuel program that suggested there would be a shortfall in the amount of highway diesel supply if all of the highway diesel fuel were required to meet a 15 ppm sulfur limit beginning in 2006. As described later in Section V.C., in response to these comments we analyzed the capability of the entire diesel fuel refining industry in the U.S. to adjust to the low sulfur fuel requirements. Based on this analysis, we believe that supplies of highway diesel fuel will be sufficient even if all highway diesel fuel were required to comply with the 15 ppm standard in 2006. The temporary compliance option included in today's rule is intended as a ''safety valve'' that, along with the hardship provisions discussed in Section IV.C.,will further help to ensure adequate supplies of highway diesel fuel beginning in 2006.

In performing the analysis of diesel fuel supply, we examined all diesel fuel refiners (including those that currently make only off-highway diesel fuel but not highway diesel fuel) to assess the likelihood of their investing in the production of 15 ppm highway diesel

[164] As described in Sections IV.B., IV.C. and VII.E., small refiners and GPA refiners have special supplementary reporting requirements relating to the optional program they are participating in.

EXHIBIT J

fuel. Using a refinery cost model, we made projections of the likely response by refineries to today's low sulfur requirements by estimating the cost for each refinery to produce low sulfur diesel fuel. The results of our analysis show that the overall supply of highway diesel fuel will continue to be adequate to meet market demands as refiners are required to start producing low sulfur highway diesel fuel. Most refineries that currently produce highway diesel fuel will produce about the same volume of low sulfur diesel fuel once the program takes effect. However, several refineries could economically expand their current highway diesel fuel production by shifting some of their off-highway production today, and a few others currently producing only off-highway diesel fuel could economically shift to some highway diesel production. Consequently, our analysis indicates that there is ample capability in the refining industry to continue to economically supply sufficient quantities of highway diesel fuel when today's program goes into effect. For a fuller discussion of this analysis, see Section V of this preamble and Chapter IV of the RIA.

If any potential for highway diesel fuel shortfalls exists by requiring all fuel to meet 15 ppm sulfur in 2006, as CRA's analysis suggests, we believe that allowing some continued supply of 500 ppm, as we are doing under the temporary compliance option and hardship provisions contained in today's action, addresses this concern. Since the final rule allows some transition period before the entire highway diesel pool is required to meet the 15 ppm sulfur standard, some refiners will not need to change their current operations and will be able to continue producing 500 ppm fuel during these years. Those refiners that delay production of low sulfur diesel fuel until the later years of the program will tend to be the refiners with the highest cost to comply and, thus, refiners that would otherwise have the greatest tendency not to invest and thereby impact supply. Refiners that begin producing low sulfur diesel fuel in the later years of the program will also be able to take advantage of ongoing improvements in desulfurization technology. Together, these factors will help avoid or reduce any potential losses in highway diesel fuel production when the program requires full compliance with low sulfur diesel fuel.

b. Ensures Widespread Availability of Low Sulfur Diesel Fuel

A major concern we noted in the NPRM regarding a fuel phase-in program was ensuring the widespread availability of low sulfur diesel fuel. Without an assurance of widespread availability, there would be concerns whether the 2007 and later model year heavy-duty vehicles that were designed to operate on low sulfur fuel would be able to purchase it in all parts of the country. If such vehicles were fueled with 500 ppm diesel fuel, the emission control systems could be irreversibly damaged and any benefit of the new emission standards could be eliminated (see Section III.F. above). Therefore, in setting the requirements for the temporary compliance option, we have analyzed the likelihood that fuel will be widely available so that 2007 and later model year heavy-duty vehicles will be able to find low sulfur fuel in all local markets across the country. To achieve this goal, we believe there need to be assurances that refineries producing 15 ppm fuel are sufficiently scattered throughout each of the PADDs and that most pipelines will carry 15 ppm fuel (either as the only highway diesel fuel or in addition to 500 ppm highway fuel).

In determining what fraction of highway diesel fuel would need to be low sulfur under the temporary compliance option provision, taking into account the potential impact of the hardship provisions, we used a refinery cost model to estimate the costs of producing 15 ppm fuel for all refineries. We then assumed that the refineries with the lowest costs would convert to 15 ppm fuel and assumed the other refineries would purchase credits and continue producing 500 ppm fuel through the compliance option period. We then overlaid the information on which refineries were estimated to be producing 15 ppm fuel with the highway diesel fuel distribution system in the United States. We examined different levels for the temporary compliance option beginning as low as 20 percent and ranging as high as 90 percent. The results of the analysis show that at temporary compliance option levels for 15 ppm below 80 percent, there are local regions of the country where we believe there would likely be shortages of low sulfur diesel fuel. The areas where we believe there would be shortages are either (1) served by pipelines that we believe would not carry 15 ppm fuel, because the refineries serving those pipelines are projected to produce primarily 500 ppm; or (2) dominated by refineries we believe would continue producing 500 ppm fuel under the temporary compliance option and are not currently capable of receiving significant supplies of a second grade of diesel fuel through other reasonable means. At the 80 percent level, we believe that all pipelines will carry low sulfur diesel fuel, since there are a sufficient number of refineries scattered across the country producing low sulfur diesel fuel and at sufficient volumes for pipelines to choose to carry it. We also believe that the program ensures that low sulfur diesel fuel will be sufficiently available to retail outlets at a reasonable cost either at a local terminal or by trucking the fuel a limited distance.

As noted earlier, we are not adopting any retailer availability requirements with today's fuel program. Given the amount of low sulfur diesel fuel required under today's temporary compliance option, we believe the distribution system will make low sulfur diesel fuel widely available without any requirements on retail outlets to supply low sulfur diesel fuel.

c. Provides Lower Costs to Refineries

One benefit of the temporary compliance option being adopted today is that a significant number of refiners will have the ability to delay the date when they convert their highway diesel fuel production to 15 ppm, allowing the refining industry to stretch out its engineering and construction resources. Given the flexibilities being adopted today, we believe that many large refineries, and other refineries for which diesel desulfurization is least expensive, will make the commitment to convert their entire highway diesel pool to 15 ppm sulfur in 2006 and sell credits to other refineries that will continue to produce all of their fuel at the 500 ppm sulfur level. Using a refinery cost model to estimate how refineries will respond to the temporary compliance option requirements, we believe that more than half of the refineries will delay capital investment by buying credits and continue producing 500 ppm sulfur diesel fuel under the temporary compliance option and small refiner hardship provisions. We estimate that refiners will be able to save as much as $1.7 billion over the transition period compared to a requirement that all highway diesel fuel comply with 15 ppm sulfur in 2006. As noted earlier, much of this potential savings will be offset by increased costs in the distribution system. Nevertheless, we project that in total, an overall savings of approximately $0.65 billion could result.

d. Misfueling Concerns Should Be Minimized

By allowing a 500 ppm and 15 ppm sulfur highway diesel fuels to be in the

EXHIBIT J

market at the same time, there is the possibility that model year 2007 and later heavy-duty vehicles will be misfueled with 500 ppm sulfur fuel, either accidentally or intentionally. As discussed above, if such vehicles are fueled with 500 ppm diesel fuel, the emission control systems could be irreversibly damaged and any benefit of the new emission standards could be eliminated. To minimize the possibility of misfueling, we are adopting labeling requirements that apply to both retail stations and vehicle manufacturers. Under these provisions, labels will be applied at the diesel fuel pumps at retail stations and at the fuel tank inlet on the vehicle. The labels must indicate that only 15 ppm sulfur highway diesel fuel may be used in 2007 and later model year heavy-duty vehicles. The labeling requirements for fuel pumps and vehicles are described in detail in Sections VII.C. and VI.G., respectively.

Given the program being adopted today, we believe that intentional misfueling will not be a serious problem. The main incentive vehicle owners may have for using 500 ppm sulfur fuel would likely be cost savings. In general, producing 500 ppm sulfur should be cheaper than producing 15 ppm fuel. However, given the requirements adopted today, we believe there should not be a large cost differential between the 15 ppm sulfur fuel and the 500 ppm sulfur fuel at retail outlets. Under the credit trading program, to produce 500 ppm fuel, most refiners will have to purchase credits from other refiners producing 15 ppm fuel, increasing the cost of the 500 ppm fuel, while decreasing the cost of the 15 ppm fuel. At the refinery gate, the cost of both fuels should be approximately the same. In addition, given the amount of 15 ppm fuel required under the temporary compliance option, 15 ppm fuel will be distributed through essentially the entire pipeline system. The distribution of 500 ppm fuel, on the other hand, will be more limited, due to its much lower volume. We expect that the 500 ppm fuel will be distributed by truck in the areas nearby refineries producing this fuel and through a few major pipelines to a limited number of major fuel consuming areas. Overall, the better economies of scale of transporting 15 ppm fuel should compensate for any additional handling cost due to the need to more carefully avoid contamination with higher sulfur fuels. For these reasons, we expect the price to consumers of 500 ppm sulfur fuel to be generally close to that of 15 ppm sulfur fuel and, therefore, there should not be a significant economic incentive to misfuel with 500 ppm sulfur fuel. Finally, because vehicle owners will likely void the manufacturer's warranty if they misfuel with 500 ppm sulfur fuel, they will have an additional incentive not to misfuel. Owners of heavy-duty vehicles make significant investments in these vehicles and will not want to take the chance of voiding their warranty for a relatively small savings in fuel cost.

In addition to our concern about intentional misfueling, we also have some concerns about accidental misfueling during the optional compliance program years. This concern is lessened to some extent because of the limited amount of 500 ppm sulfur fuel that will be available, the short duration of the optional compliance program, the knowledgeable owners and operators of trucks and most importantly, the labels that will be required on both the vehicle and the fuel pumps. Thus, we do not expect either type of misfueling to be a significant problem.

e. Summary

In summary, today's program has been structured to ensure a smooth transition to low sulfur highway diesel fuel. We believe this will allow the refining industry the ability to spread out capital investments and provide more time for the market to transition to the low sulfur diesel fuel. This, in turn, will help to mitigate any potential for concerns about highway diesel fuel supply shortfalls. We also believe the provisions included in the program will continue to provide assurance that adequate supplies of low sulfur highway diesel fuel will be available throughout the nation for the 2007 and later model year heavy-duty vehicles that will require the fuel to comply with the emission standards. Moreover, because the flexibilities included in the program should reduce the economic impact on refiners, we will also expect there to be a reduction in the costs to highway diesel fuel users.

B. What Provisions Apply in the Geographic Phase-in Area?

1. What Is the Geographic Phase-in Area and How Was it Established?

In the low sulfur gasoline rule, we established the GPA provision which provides temporarily less stringent standards for gasoline sold in certain parts of the West and Alaska (40 CFR 80.215). A map of the area is shown in Figure IV–2, below.[165] As described in the preamble to the low sulfur gasoline final rule, we used two criteria to develop and evaluate the GPA approach: (1) Relative environmental need and (2) the ability of U.S. refiners and the distribution system to provide compliant gasoline.

BILLING CODE 6560–50–P

[165] Alaska, Colorado, Idaho, Montana, New Mexico, North Dakota, Utah, and Wyoming. Note that minor changes to this area are currently under consideration. Any such changes subsequent to today's rule are intended to be carried over into today's rule as well.

EXHIBIT J

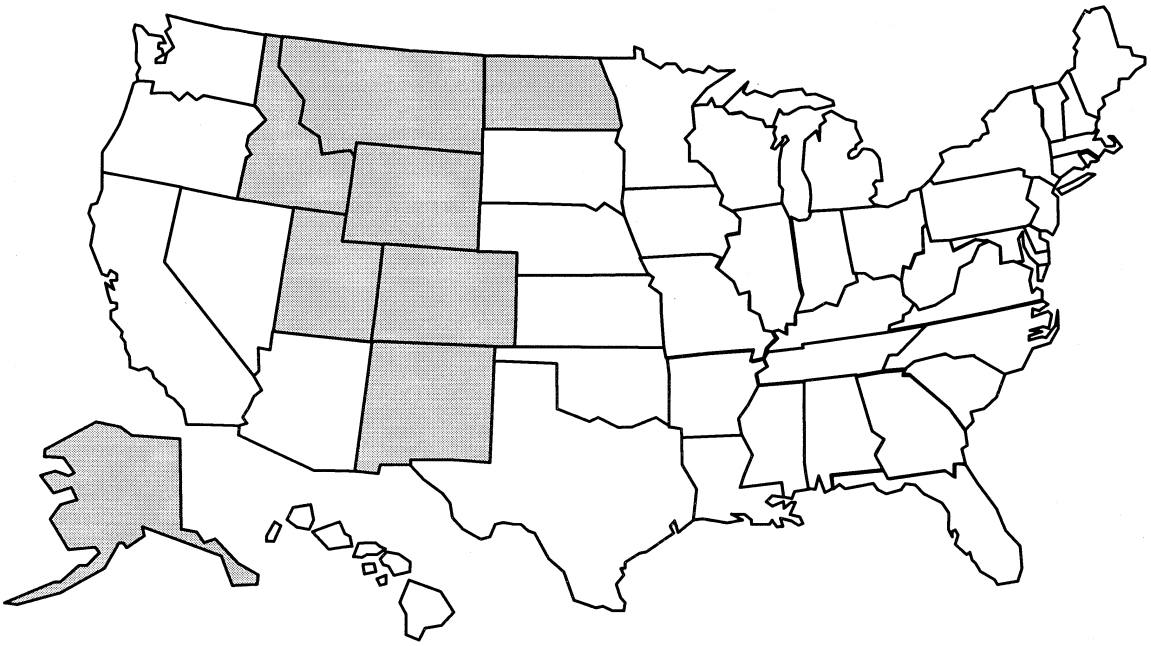

Figure IV-2. Geographic Phase-in Area

BILLING CODE 6560–50–C

In part, we defined the GPA based on the relative difficulty of producing or obtaining complying low sulfur gasoline (see preamble to the low sulfur gasoline rule at 65 FR 6698, February 10, 2000). The refining industry in the GPA is dominated by small capacity, geographically-isolated refineries located within that area. As a general rule, refineries in this area will (because of their crude oil capacity, corporate size, and location) have the most difficult time of all refineries nationwide in competing for the engineering and construction resources needed to modify their refineries to comply with the low sulfur gasoline standards.

Furthermore, an assessment of gasoline production and use data and information on the products pipeline system shows that states and counties in the GPA are solely or predominantly dependent on gasoline produced by these refineries and have limited or no access to gasoline from other parts of the country. Specifically, Department of Energy data for 1998 indicate that over 80 percent of the gasoline sold in this area is produced by the relatively small refineries located within the region. Much of this gasoline is produced by small volume refineries that are not owned by small businesses, and are therefore not afforded the flexibility of the small refiner provisions described in Section IV.C. Providing low sulfur gasoline to these states and counties is expected to be more difficult and costly in the near term.

The temporary gasoline provisions for the GPA apply for three years, 2004 through 2006. Since the low sulfur gasoline standards for the rest of the country require compliance in January 2006 with a 30 ppm refinery average standard and an 80 ppm gallon cap, the geographic phase-in provides an additional year for refiners to reach those standards. This extra year and the somewhat less stringent standards during the gasoline phase-in will provide the refining industry the opportunity for a more orderly transition to the 30/80 ppm gasoline sulfur standards by January 2007.

The gasoline GPA provision covers all gasoline produced (or imported) for use in the GPA[166], whether refined within the area or distributed within the area via pipeline, barge, truck, or rail. Foreign refiners are involved in this program through importers, which are the regulated entities.

2. *Highway Diesel Provisions for GPA Refiners*

In response to our proposal, we received many comments from the refining industry and others regarding the timing of our proposed highway diesel fuel sulfur program. Commenters argued that the proposed schedule for diesel sulfur compliance, beginning in mid-2006, would be a problem since it directly coincides with the December 2006 gasoline sulfur compliance date for the GPA. Some said that the timing of the diesel program could effectively negate the benefit to refiners of the GPA program since desulfurization investments would need to take place during essentially the same time period. This could thus increase the difficulty of refiners in this region to raise capital and to engage engineering and construction resources. Some also said that an extension of the GPA gasoline program would allow more rational planning without unduly reducing the air quality benefits of the program.

We agree with many of the commenters in this regard—refineries supplying the GPA tend to be disproportionately challenged compared to other refiners with respect to capital formation, the availability of engineering and construction resources, and the isolated nature of many of the markets. Moreover, the introduction of low sulfur highway diesel fuel in June 2006 indeed overlaps with the conclusion of the interim low sulfur gasoline standards for GPA refiners.

In consideration of these comments, we believe that it is appropriate to grant additional flexibility to refiners that supply gasoline to the GPA while also meeting the low sulfur diesel standards. Additional flexibility for GPA refiners will allow them to spread out their capital investments for producing low sulfur gasoline and highway diesel fuel. In light of the above, we are modifying

[166] As stated in the Tier 2/Gasoline Sulfur final rule (See § 80.215(a)(2)), we plan to expand the GPA to include counties and tribal lands in states adjacent to the eight core GPA states.

EXHIBIT J

the GPA gasoline program while still achieving significant environmental benefits. We expect this provision will have little long-term impact on the environmental benefits of the Tier 2/ Gasoline Sulfur program, while providing for considerable near-term implementation flexibility and improved feasibility of the highway diesel fuel program.

Refiners that produce both gasoline and highway diesel fuel and are subject to the GPA gasoline sulfur program may choose to stagger their desulfurization investments for the two fuels. Refiners that comply with the low sulfur diesel fuel standard by June 1, 2006 for all of their highway diesel fuel production may receive a two-year extension of their interim GPA gasoline standards for 2006, that is through December 31, 2008. In addition to allowing refiners the opportunity to spread out their desulfurization investments, we believe this provision will encourage the production of 15 ppm diesel fuel by some refiners producing fuel for the GPA, which will further help to ensure the new fuel is widely available for new vehicles throughout the area. Although the GPA gasoline program applies to both refiners and importers, the extension of the GPA gasoline program under today's program applies only to refiners. This reflects the fact that only refiners have to make capital investments to comply with the diesel sulfur standard.

To receive the two-year extension of the GPA standards, a U.S. refinery must by June 1, 2006 produce 100 percent of its highway diesel fuel at 15 ppm sulfur (including refineries that supply only a fraction of their gasoline production to the GPA). In addition, the refinery must maintain a production volume of 15 ppm highway diesel fuel that is at least 85 percent of the baseline highway diesel volume that was produced at that refinery on average during calendar years 1998 and 1999. We believe that it is very important that the extension of a GPA refinery's interim gasoline sulfur standard be linked to a substantial environmental benefit from the production of 15 ppm diesel fuel in 2006. We have established a minimum volume requirement to prevent the extension of the GPA gasoline program from applying in situations where a refinery changes its refinery product slate to produce very little highway diesel fuel—even though this production is at 15 ppm sulfur. We believe the 85 percent level is sufficient to reflect a substantial investment in desulfurization technology. At the same time the 85 percent level should allow for any reasonable variation in production of highway diesel fuel that would be expected to occur in typical situations between now and 2006, particularly given the continued growth of the highway diesel market.

Similarly, a foreign refinery that meets the same conditions as a domestic GPA refiner may also sell gasoline into the GPA that meets a less stringent sulfur standard during 2007 and 2008.[167] That is, a foreign refinery that by June 1, 2006 sells 100 percent of the highway diesel fuel it imports into the U.S. as 15 ppm fuel (and that maintains the 85 percent of baseline volume requirement) may sell somewhat higher-sulfur gasoline into the GPA in 2007 and 2008. The actual gasoline sulfur standard during this period, as with domestic refiners, would be based on the foreign refinery's gasoline sulfur baseline.

If a situation arises where a GPA refinery did not produce highway diesel fuel in 1998 or 1999 but later begins to produce 15 ppm diesel fuel, use of the GPA gasoline phase-in extension will require case-by-case EPA approval. In its application for such approval, a refinery must show us that the loss of emission reductions will not be significant and must propose an appropriate minimum production volume. In evaluating such a proposed minimum volume, we may consider, among other factors, the typical ratio between highway diesel and gasoline production for other refineries in the industry. Again, the reason for the two-year extension of the gasoline interim program is to allow the GPA refinery to spread out its capital investments while increasing the quantity of 15 ppm fuel being produced. We expect that GPA refineries using this option will make a substantive capital investment in diesel desulfurization and have thus set this minimum 15 ppm diesel production volume limit.

Since refiners participating in this program are required to produce 100 percent of their highway diesel at 15 ppm, those that choose this option cannot participate in the highway diesel temporary compliance option, and, therefore, are not permitted to generate credits on the low sulfur diesel fuel that they produce. If, after June 1, 2006, a foreign refinery is not producing 100 percent of its highway diesel fuel imported into the U.S. at 15 ppm sulfur in the required volume, it forfeits the two-year extension or any remaining portion of the extension of its interim gasoline program.

3. *How Do Refiners Apply for an Extension of the GPA Gasoline Program?*

Any refinery that seeks an extension of its GPA gasoline standards must apply to us as a part of its registration, due by December 31, 2001. In this application, the refinery must indicate its intention to produce 100 percent of its highway diesel fuel at 15 ppm (and at a volume at least 85 percent of the highway diesel fuel volume it produced on average during calendar years 1998 and 1999) by June 1, 2006.

4. *Required Reporting for GPA Refiners*

As described in Section VII.E below, refiners that plan to use the extension of the GPA gasoline standard must report their plans and progress several times over the course of the program. In addition to their initial registration and application discussed above, a refinery must submit pre-compliance reports in 2003, 2004, and 2005, describing its progress toward the capacity to produce 100 percent of its highway diesel fuel at 15 ppm sulfur (at a volume at least 85 percent of its baseline volume). Then, by July 1, 2006, such a refinery must confirm to us that by June 1, 2006 it was producing 100 percent of its highway diesel fuel at 15 ppm, at the appropriate volume.[168] After the diesel sulfur program is underway in 2006, the refinery must provide us with annual compliance reports by the end of February of 2007, 2008, and 2009 (i.e., until after the end of the extended interim gasoline sulfur program for GPA refiners on December 31, 2008).

C. Hardship Provisions for Qualifying Refiners

This section describes various provisions for certain qualifying refiners, both domestic and foreign, that may face hardship circumstances.

1. *Hardship Provisions for Qualifying Small Refiners*

In developing our diesel sulfur program, we evaluated the need and the ability of refiners to meet the 15 ppm standard as expeditiously as possible. This analysis is described in detail in Chapter IV of the RIA. As a part of this analysis, we found that while the majority of refiners would be able to meet the needed air quality goals in the

[167] Prior to 2007, foreign refiners can participate in the GPA program through importers. Under today's provisions for 2007 and 2008, importers are not eligible and foreign refiners can participate directly as refiners.

[168] If the refiner was not producing 15 ppm fuel for all its highway diesel production at that refinery by June 1, 2006, the July 1, 2006 letter must confirm that the refiner is forfeiting the ''automatic'' two-year extension of that refinery's interim gasoline program.

EXHIBIT J

2006 time frame, there would be some refiners that would face particularly challenging circumstances which would cause them to have more difficulty, in comparison to the industry as a whole, in meeting the standards.

We believe it is feasible and necessary for the vast majority of the program to be implemented reasonably quickly to achieve the air quality benefits as soon as possible. To do otherwise would be to base the time frame of the entire program on the lowest common denominator. Thus, we have provided special flexibility provisions for a subset of refiners that qualify as ''small refiners,'' which represent about five percent of the overall highway diesel volume. As described in more detail below, and in the Regulatory Impact Analysis (Chapter VIII of the RIA), we concluded that refineries owned by small businesses face unique hardship circumstances, compared to larger companies.

a. Qualifying Small Refiners

The primary reason for special small refiner provisions is that small businesses generally lack the resources available to large companies which enable the large companies (including those large companies that own small volume refineries) to raise capital for investing in desulfurization equipment. The small businesses are also likely to have more difficulty in securing loans, competing for engineering resources, and completing construction of the needed desulfurization equipment in time to meet the standards adopted today which begin in 2006. In addition, the implementation of the low sulfur diesel program will occur in the same general time frame as the implementation of the low sulfur gasoline program, since most of those small refiners that are covered by the interim standards under the Tier 2/Gasoline Sulfur program (40 CFR Part 80, Subpart H) are also covered by today's diesel fuel sulfur program.

The emissions benefits of the low sulfur diesel program are needed as soon as possible—to allow the implementation of new emission reduction requirements on heavy-duty engines and vehicles and, thus, to reduce ozone, particulate matter, and other harmful air pollutants. Since our analysis showed that small businesses in particular face hardship circumstances, we are adopting temporary provisions that will provide refineries owned by small businesses additional time to meet the ultimate 15 ppm sulfur cap or balance investments of this program with those related to the Tier 2/Gasoline Sulfur program. This approach allows us to achieve the earliest implementation date for advanced technology diesel vehicles (i.e., the 2007 model year) and the needed emission reductions they will bring.

We believe that the temporary flexibilities described below are an effective way to begin the broad implementation of the standards as expeditiously as is feasible and thereby achieve significant air quality benefits in an expeditious manner. This section describes the special provisions we are offering small businesses to mitigate the impacts of our program on them and generally explains the analysis we undertook of those impacts. Please refer to the Response to Comments document for a detailed discussion of comments we received on these provisions, and to the RIA for a more detailed discussion of our analysis of small refiner circumstances.

As explained in the discussion of our compliance with the Regulatory Flexibility Act in Section X.B. and in the Regulatory Flexibility Analysis in Chapter VIII of the RIA, we considered the impacts of our proposed regulations on small businesses. We have historically, as a matter of practice, considered the potential impacts of our regulations on small businesses. We believe that the temporary flexibilities we are adopting for small refiners contributed to our development of a framework to achieve significant environmental benefits from lower sulfur diesel in the most expeditious manner that is reasonably practicable.

A large part of the analysis of small business impacts conducted for this rulemaking was performed in conjunction with a Small Business Advocacy Review (SBAR) Panel we convened, pursuant to the Regulatory Flexibility Act as amended by the Small Business Regulatory Enforcement Fairness Act of 1996 (SBREFA). In the SBREFA amendments, Congress stated that ''uniform Federal regulatory requirements have in numerous instances imposed unnecessary and disproportionately burdensome demands including legal, accounting, and consulting costs upon small businesses . . . with limited resources[,]'' and directed agencies to consider the impacts of certain actions on small entities. The final report of the Panel is available in the docket. Through the SBREFA process, the Panel provided information and recommendations regarding:

- The significant economic impact of the proposed rule on small entities;
- Any significant alternatives to the proposed rule which would ensure that the objectives of the proposal were accomplished while minimizing the economic impact of the proposed rule on small entities;
- The projected reporting, recordkeeping, and other compliance requirements of the proposed rule; and,
- Other relevant federal rules that may duplicate, overlap, or conflict with the proposed rule.

In addition to our participation in the SBREFA process, we conducted our own outreach, fact-finding, and analysis of the potential impacts of our regulations on small businesses. Some of the small refiners with whom we and the Panel met indicated their belief that their businesses may close due to the substantial costs, capital and other impacts of meeting the 15 ppm diesel fuel standard without either additional time or flexibility with respect to gasoline sulfur compliance. Based on these discussions and analyses, the Panel and we agree that small refiners would likely experience a significant and disproportionate financial hardship in reaching the objectives of our diesel fuel sulfur program. However, the Panel also noted that the burden imposed upon the small refiners by our sulfur requirements varied from refiner to refiner and could not be alleviated with a single provision. We agree with the Panel and are offering qualifying small refiners three options to choose from in moving toward compliance with the low sulfur diesel fuel requirements.

For today's action, we have structured a selection of temporary flexibilities for qualifying small refiners, both domestic and foreign, based on the factors described below. Generally, we structured these provisions to address small refiner hardship while expeditiously achieving air quality benefits and ensuring that the low sulfur diesel fuel coincides with the introduction of 2007 model year diesel vehicles.

First, the compliance deadlines in the program, combined with flexibility for small refiners, will quickly achieve the air quality benefits of the program, while helping to ensure that small refiners will have adequate time to raise capital for new or revamped equipment. Most small refiners have limited additional sources of income beyond refinery earnings for financing the equipment necessary to produce low sulfur diesel. Because these small refiners typically do not have the financial backing that larger and generally more integrated companies have, they can benefit from additional time to secure capital financing from their lenders.

EXHIBIT J

Second, we believe that allowing time for refinery sulfur-reduction technologies to be proven out by larger refiners before small refiners have to put them in place will reduce the risks incurred by small refiners that utilize these technologies to meet the standards. The added time will likely allow for lower costs of these improvements in desulfurization technology (e.g., better catalyst technology or lower-pressure hydrotreater technology). Because of the poorer economies of scale and the higher relative capital and operating costs faced by small refiners, more time for technology development and commercialization will limit the economic consequences for small refiners. Small refiners are disadvantaged by the economies of scale that exist for the larger refining companies-capital costs and per-barrel fixed operating costs are generally higher for small refiners.

Third, providing small refiners more time to comply will increase the availability of engineering and construction resources. Since most large and small refiners must install additional processing equipment to meet the sulfur requirements, there will be a tremendous amount of competition for technology services, engineering manpower, and construction management and labor. Our analysis shows that there are limits to the price elasticity of these resources. In addition, vendors will be more likely to contract their services with the major companies first, as their projects will offer larger profits for the vendors.

Finally, because the gasoline and diesel sulfur requirements will occur in approximately the same time frame, small refiners that produce both fuels will have a greater difficulty than most other refiners in securing the necessary financing. Hence, any effort that increases small refiners' ability to stagger investments for low sulfur gasoline and diesel will facilitate compliance with the two programs.

Providing these options to assist small refiners experiencing hardship circumstances enables us to go forward with the 15 ppm sulfur standard beginning in 2006. Without this flexibility, the benefits of the 15 ppm standard would possibly not be achieved as quickly. By providing temporary relief to those refiners that need additional time, we are able to adopt a program that expeditiously reduces diesel sulfur levels in feasible manner for the industry as a whole. In addition, we believe the volume of diesel that will be affected by this hardship provision is marginal. We estimate that small refiners contribute approximately five percent of all domestic diesel fuel production.

b. How Do We Define Small Refiners?

The following definition of small refiner is based closely on our small refiner definition in the Tier 2/Gasoline Sulfur rule. We define a refiner that meets both of the following criteria as a ''small refiner'' for purposes of this rule:

- No more than 1,500 employees corporate-wide, based on the average number of employees for all pay periods from January 1, 1999 to January 1, 2000.
- A corporate crude oil capacity less than or equal to 155,000 barrels per calendar day (bpcd) for 1999.

In determining the total number of employees and crude oil capacity, a refiner must include the number of employees and crude oil capacity of any subsidiary companies, any parent company and subsidiaries of the parent company, and any joint venture partners. We define a subsidiary of a company to mean any subsidiary in which the company has a 50 percent or greater ownership interest. This definition of small refiner is the same definition used under the recently promulgated Tier 2/Gasoline Sulfur program (40 CFR 80.225), except that we have included additional regulatory language to clarify our interpretation of the term ''subsidiary'' and we have updated the time period used to determine the employee number and crude oil capacity criteria to reflect data for the most recent calendar years. This approach is consistent with the Small Business Administration's regulations, which specify that, where the number of employees is used as a size standard, the size determination is to be based on the average number of employees for all pay periods during the preceding 12 months (13 CFR 121.106).

The gasoline sulfur standards and the diesel sulfur standards will impact small refiners in approximately the same time frame. For this reason, we will consider any refiner that we approve as meeting the small refiner definition under the gasoline sulfur program (40 CFR 80.235) to be a small refiner under the highway diesel sulfur rule as well without further demonstration.

In addition, a company that after January 1, 2000 either acquires or reactivates a refinery that was shutdown or non-operational between January 1, 1999 and January 1, 2000 may also apply for small refiner status. Such an application needs to be submitted to us no later than June 1, 2003. In this case, we will judge eligibility under the employment and crude oil capacity criteria based on the most recent 12 consecutive months unless data provided by the refiner indicates that another period of time is more appropriate. Companies with refineries built after January 1, 2000 are not eligible for the small refiner hardship provisions.

If a refiner with approved small refiner status later exceeds the 1,500 employee threshold or the corporate crude oil capacity of 155,000 bpcd without merger or acquisition, it may keep its small refiner status. This is to avoid stifling normal company growth and is subject to our finding that the company did not apply for and receive the small refiner status in bad faith. On the other hand, if a refiner with approved small refiner status later exceeds the small refiner criteria through merger or acquisition, its refineries must forfeit their small refiner status and begin complying with the national standards by January 1 of the next calendar year. For example, if a small refiner with two refineries purchases a third refinery in 2007 and that purchase causes the refiner to exceed the employee or corporate crude oil capacity thresholds for small refiner status, then that refiner must forgo its small refiner status and begin complying with the national standards by January 1, 2008 at all its refineries.

c. What Options Are Available for Small Refiners?

All refiners producing highway diesel fuel are able to take advantage of the temporary compliance option discussed in Section IV.A. Diesel producers that also market gasoline in the GPA may receive additional flexibility under today's rule (Section IV.B.). As an alternative, refiners that seek and are granted small refiner status may choose from the following three options under the diesel sulfur program. These three options have evolved from concepts on which we requested and received comment in the proposal. In most cases, we believe that small refiners will find these options preferable to either the broader diesel fuel temporary compliance option or the GPA provision discussed above.

500 ppm Option. A small refiner may continue to produce and sell diesel fuel meeting the current 500 ppm sulfur standard for four additional years, until May 31, 2010, provided that it reasonably ensures the existence of sufficient volumes of 15 ppm fuel in the marketing area(s) that it serves.

Small Refiner Credit Option. A small refiner that chooses to produce 15 ppm fuel prior to June 1, 2010 may generate and sell credits under the broader

EXHIBIT J

temporary compliance option. Since a small refiner has no requirement to produce 15 ppm fuel under this option, any fuel it produces at or below 15 ppm sulfur will qualify for generating credits.

Diesel/Gasoline Compliance Date Option. For small refiners that are also subject to the Tier 2/Gasoline sulfur program (40 CFR Part 80, Subpart H), the refiner may choose to extend by three years the duration of its applicable interim gasoline standards, provided that it also produces all its highway diesel fuel at 15 ppm sulfur beginning June 1, 2006.

All refiners producing diesel fuel are required to provide us with basic data on their progress toward compliance in 2003–2005 under the pre-compliance reporting requirements described above in Section IV.A. As a part of their pre-compliance reports, small refiners must provide a limited amount of additional information specific to the option they choose. We discuss each option, and the special pre-compliance reporting requirements for each option, in the next paragraphs and in Section VII.E below.

i. 500 ppm Option

The 500 ppm option is available for any refiner that qualifies as a small refiner. Under this option, small refiners may continue selling highway diesel fuel with sulfur levels meeting the current 500 ppm standard for four additional years, provided that they supply information showing that sufficient alternate sources of 15 ppm diesel fuel in their market area will exist for fueling new heavy-duty highway vehicles. Under this option, small refiners may supply current 500 ppm highway diesel fuel to any markets for use only in vehicles with older (pre-2007) technology until May 31, 2010. In other words, small refiners that choose this option may delay production of highway diesel fuel meeting the 15 ppm standard for four years.

This 500 ppm option for small refiners is similar to the option provided to all refiners under the temporary compliance option described in Section IV.A above in that it allows a refiner to continue producing and selling the current 500 ppm fuel for a period of time. However, this option differs from the broader compliance option in that small refiners may produce and sell 100 percent of their highway fuel at 500 ppm without needing to buy credits. In contrast, under the broader temporary compliance option, refiners must buy credits to produce any volume of 500 ppm fuel over 20 percent of their total highway diesel production.

At the retail level, retailers will not be subject to any availability requirements and thus may sell 500 ppm fuel, 15 ppm highway fuel, or both (as is the case under the broader diesel temporary compliance option described in Section IV.A). All parties in the diesel fuel distribution system will have to maintain the segregation of 15 ppm fuel and 500 ppm fuel and only 15 ppm fuel may be sold for use in model year 2007 and later heavy-duty diesel vehicles.

As a part of their pre-compliance reporting due June 1, 2003 (see Section IV.A. above), any small refiners taking advantage of this 500 ppm option must show that sufficient sources of 15 ppm fuel will likely exist in the area served by the small refiner in the absence of production of 15 ppm fuel by that refiner.[169] A small refiner could approach this showing in different ways. For example, depending on the circumstances, the refiner might point to the presence of other refiners in the area that are expected to produce 15 ppm fuel, or to the refiner's proximity to a major pipeline that will be carrying 15 ppm fuel. Similarly, the refiner might show that its market share in the area's highway diesel market will be too small to significantly affect the volume of 15 ppm fuel regardless of the small refiner's actions.

Another approach could be to indicate practical steps that the refiner itself is prepared to take to help ensure that 15 ppm diesel fuel will be available. One commenter suggested a plan to add a separate tank and expand its fuel loading rack for handling 15 ppm diesel fuel that would be supplied by a different refiner—thus making low sulfur fuel available, at least at the wholesale level, at its refinery gate even though it produced no 15 ppm fuel.

Because of the wide distribution of 15 ppm fuel that we believe will occur under the industry-wide optional compliance program discussed in Section IV.A. above, we expect that few if any small refiners wishing to use the 500 ppm option will find it difficult to make the showing that 15 ppm fuel will exist in the area. If we do not take action on this showing within four months of receiving a refiner's 2003 pre-compliance report (i.e., by October 1, 2003 at the latest), the refiner's showing will be considered approved.

[169] If circumstances arise that cause the availability of 15 ppm fuel in the refiner's market area to decline, the refiner must provide a supplemental showing in its pre-compliance reports due in June 1, 2004 and/or June 1, 2005. As with the 2003 report, we will either approve or disapprove these additional showings within four months or, if we take no action, the showing will be deemed approved.

Finally, we are providing this option so that small refiners may use the temporary flexibility provided by the 500 ppm option as a pathway toward compliance with the 15 ppm standard and not as an opportunity for those refiners to greatly expand their production of fuel meeting the 500 ppm sulfur standard. To help ensure that any significant expansion of refining capacity that a small refiner undertakes in the future will be accompanied by an expansion of desulfurization capacity, we are limiting the volume of 500 ppm sulfur fuel that a small refiner may produce under this option to a baseline level. Specifically, small refiners selecting this 500 ppm option must limit the volume they produce of highway diesel fuel meeting the 500 ppm sulfur standard to the lesser of the following values: (1) 105 percent of the average highway diesel volume it produced from crude oil in calendar years 1998 and 1999 or (2) the average highway diesel volume it produced from crude oil in calendar years 2004 and 2005. Any volume of 500 ppm highway diesel fuel (averaged over the previous 12 consecutive months) that exceeds this limitation after 2006 must comply with the diesel sulfur standards that apply to other refiners under the broader program (i.e., the standards described in Section IV.A. above, including the 80% requirement of the temporary compliance option).

ii. Small Refiner Credit Option

We believe that the relative difficulty for small refiners to comply with today's program warrants compliance flexibility for these refiners. At the same time, we want to encourage all refiners to produce low sulfur diesel fuel as early and in as many geographic areas as possible. As an incentive for small refiners to invest in desulfurization capacity, those that choose to produce 15 ppm fuel earlier than required under the 500 ppm option may generate credits for each gallon of diesel fuel produced that meets the 15 ppm standard. This includes the ability to generate credits prior to the start of the program on June 1, 2006 under the provisions described in Section IV.A.1.a. They could then sell these credits to other refiners for use in the broader optional diesel fuel compliance program described above in Section IV.A, helping to offset some low sulfur diesel fuel production costs.

Under this option, credits may be generated based on the volume of any diesel fuel that meets the 15 ppm standard. Refiners may then sell their remaining highway diesel fuel under the 500 ppm option above.

EXHIBIT J

Pre-compliance reporting for small refiners choosing this Small Refiner Credit option is identical to that for the 500 ppm option (that is, if the small refiner is also producing 500 ppm highway diesel fuel), with the additional requirement that the refiner also report on any credits it expects to generate and sell. If the quantity of 15 ppm fuel that the refiner is preparing to produce is significant, this factor may be useful in making the necessary showing that 15 ppm fuel will be available in the refiner's market area.

iii. Diesel/Gasoline Compliance Date Option

The Tier 2/Gasoline Sulfur program included a special provision that applies for refiners that qualify as small refiners (40 CFR Part 80, Subpart H). Under that program, each small refiner is assigned an interim gasoline sulfur standard for each of its refineries. This interim standard for each refinery is established based on the baseline sulfur level of that refinery. The standards are designed to require each small refiner to either make a partial reduction in their gasoline sulfur levels or, if they already produce low sulfur fuel, to maintain their current levels. The interim program lasts for four years, 2004 through 2007, and the refiner can apply for an extension of up to three years. After the interim program expires, small refiners must produce the same low sulfur gasoline as other refiners.

Today's diesel sulfur program takes effect in the same time frame as the small refiner interim program for low sulfur gasoline. To avoid the need for simultaneous investments in both gasoline and diesel fuel desulfurization, several small refiners subject to both programs raised the concept of allowing those investments to be staggered in time. Because of the relative difficulty small refiners will face in financing desulfurization projects, especially for both diesel and gasoline desulfurization in the same time frame, we agree that this concept has merit and have adopted it for this rule. Under this concept, small refiners may extend the duration of their gasoline sulfur interim standards and, thus, potentially postpone some or all of their gasoline desulfurization investments while they work to achieve the low sulfur diesel standard ''on time'' in 2006. To the extent that small refiners choose this Diesel/Gasoline Compliance Date option, this provision will benefit the overall diesel program by increasing the availability of 15 ppm diesel fuel in the small refiners' market areas.

Specifically, this option provides that a small refiner can receive a three-year extension of a refinery's interim gasoline standard, until January 1, 2011, if it meets two criteria: (1) It produces both gasoline and diesel fuel at a refinery and chooses to comply with the 15 ppm diesel fuel sulfur standard by June 1, 2006 for all its highway diesel production at that same refinery, and (2) it produces a minimum volume of 15 ppm fuel at that refinery that is at least 85 percent of the average volume of highway diesel fuel that it produced at that refinery during calendar years 1998 and 1999. We believe that it is very important that the extension of a small refiner's interim low sulfur gasoline standard be linked to a substantial environmental benefit from the production of low sulfur diesel fuel in 2006. We have established a minimum volume requirement to prevent the Diesel/Gasoline Compliance Date option from applying in situations where a refiner changes its refinery product slate to produce very little highway diesel fuel—even though this production is at a 15 ppm sulfur level—and yet receives an extension of its interim gasoline sulfur standard.[170] We believe the 85 percent level is sufficient to reflect a substantial investment in desulfurization technology. At the same time the 85 percent level should allow for any reasonable variation in production of highway diesel fuel that would be expected to occur in typical situations between now and 2006, particularly given the continued growth of the highway diesel market. Again, the three-year extension of the gasoline interim program is to allow small refiners to stretch out their capital investments while increasing the quantity of 15 ppm fuel being produced. We expect that small refiners using this option will make a substantive capital investment in diesel desulfurization and have thus set this minimum 15 ppm diesel volume limit.

We believe that the additional three-year extension of the interim gasoline sulfur standards provided today is warranted without any further action by small refiners, provided that they assume the financial burden of full low sulfur diesel compliance in 2006 (i.e., instead of choosing the flexibility of the broader temporary compliance program). The diesel and gasoline desulfurization investments for those refiners can thus be staggered in time. We believe a three-year extension is appropriate due to the substantial investment in highway diesel fuel that these small refiners will be undertaking.

By July 1, 2006, small refiners that plan to use the Diesel/Gasoline Compliance Date option for one or more refineries must send a letter to us confirming that by June 1, 2006 they were producing 100 percent of their highway diesel fuel in compliance with the 15 ppm sulfur standard at their refinery(ies). These refiners must make similar confirmations each year through 2011 in their annual compliance reports (due by the end of February of each year)—until after the end of the extended interim low sulfur gasoline program for small refiners on December 31, 2010.

If a given small refiner was not producing 15 ppm fuel for all its highway diesel production at that refinery by June 1, 2006, the July 1, 2006 letter must confirm that the refiner is forfeiting the ''automatic'' three-year extension of that refinery's interim gasoline program (although the refiner may still apply for a case-by-case extension through the Tier 2/Gasoline Sulfur program under 40 CFR 80.260). In this case, we will consider a request that the refiner be allowed to use either the 500 ppm option or the Small Refiner Credit option, or both, provided that information addressing the conditions of these options as described above are included in the July 1, 2006 letter. If the refiner does not request the use of the 500 ppm option or the Small Refiner Credit option, the letter must confirm that the refiner is complying with the diesel sulfur requirements applicable to refiners that are not small refiners.

The Tier 2/Gasoline Sulfur program includes a general hardship provision for which refiners may apply. (Today's program also includes a similar provision). Depending on the nature of its hardship, a small refiner that applies for this general hardship provision under the gasoline program may be granted a ''tailor-made'' interim gasoline sulfur program different from the ''default'' program established in the rule. If such a small refiner were then to be covered by today's diesel fuel requirements and chose this Diesel/Gasoline Compliance Date option, we will allow it an extension of its special interim program for gasoline (as established under the general hardship provision) for three years beyond the scheduled end date (although no later than December 31, 2010) so long as it

[170] If a situation arises where a small refiner did not produce highway diesel fuel in 1998 or 1999 but later begins to produce 15 ppm diesel fuel, use of the Diesel/Gasoline Compliance Date option will require case-by-case EPA approval. In its application for such approval, a refiner must show us that the net loss of emission reductions will not be significant and must propose an appropriate minimum production volume. In evaluating such a proposed minimum volume, we may consider, among other factors, the typical ratio between highway diesel and gasoline production for small-to-medium sized refineries in the industry.

EXHIBIT J

met the 15 ppm diesel fuel standard and production volume requirements in 2006.

As with the other two options, refiners expecting to use the Diesel/Gasoline Compliance Date option and thus to produce their highway diesel fuel exclusively at 15 ppm fuel will have to report certain information beginning in 2003. As a part of their pre-compliance reporting due June 1, 2003 (see Section IV.A. above), any small refiners taking advantage of this option must provide information showing that diesel desulfurization plans are on track. The information supplied under this requirement must include, but will not be limited to, the following: (1) Status of applying for and receiving any necessary air pollution control permits, (2) financing that is in place or being sought, and (3) the status of engineering or construction contracts. As a part of the pre-compliance reporting due in 2004 and 2005, the refiner must provide more complete information as it becomes available to update its earlier report (e.g., the status of beginning or completing construction of desulfurization equipment).

iv. Relationship of the Options to Each Other

By definition, since a small refiner must produce 100 percent of its highway diesel as 15 ppm under the Diesel/Gasoline Compliance Date option, that option is not compatible with either the 500 ppm option or the Small Refiner Credit option. Thus a refiner choosing the Diesel/Gasoline Compliance Date option may not choose either of the other two options. However, the 500 ppm option and the Small Refiner Credit option are compatible with each other, and so a refiner may choose either or both of these options.

d. How Do Small Refiners Apply for Small Refiner Status?

Refiners that are not small refiners under the gasoline sulfur program but that are seeking small refiner status under the diesel sulfur program must apply to us as a part of their registration for the general diesel sulfur program, due no later than December 31, 2001. The application must include the following information: [171]

- The name and address of each location at which any employee of the company, including any parent companies or subsidiaries,[172] worked during the 12 months preceding January 1, 2000;
- The average number of employees at each location, based on the number of employees for each of the company's pay periods for the 12 months preceding January 1, 2000;
- The type of business activities carried out at each location; and
- The total crude oil refining capacity of its corporation. We define total capacity as the sum of all individual refinery capacities for multiple-refinery companies, including any and all subsidiaries, as reported to the Energy Information Administration (EIA) for 1999, or in the case of a foreign refiner, a comparable reputable source, such as professional publication or trade journal.[173] Refiners do not need to include crude oil capacity used in 1999 through a lease agreement with another refiner in which it has no ownership interest.

The crude oil capacity information reported to the EIA or comparable reputable source is presumed to be correct. However, in cases where a company disputes this information, we will allow 60 days after the company submits its application for small refiner status for that company to petition us with detailed data it believes shows that the EIA or other source's data was in error. We will consider this data in making a final determination about the refiner's crude oil capacity.

We will consider any refiner that was granted small refiner status under the Tier 2/Gasoline Sulfur program to also qualify as a small refiner under today's program, provided that it also produced highway diesel fuel in 1999. Such a refiner only needs to indicate as a part of its registration for this program that it is covered by the gasoline sulfur small refiner program and that it expects to be eligible for any small refiner optioins available in today's diesel program.

2. *Farmer Cooperative Refiners Will Benefit From the Flexible Provisions Available to Other Refiners*

Some refineries in the U.S. are owned by farmer cooperatives. In the NPRM, we asked for comment on whether it would be appropriate to extend hardship relief to farmer cooperatives, similar to the flexibility options for small refiners. Representatives of farmer cooperative refiners have commented to us that as refiners they face unique challenges under a diesel fuel sulfur program. As described in more detail below and in the Response to Comments document, we have carefully considered the situation of farmer cooperative refiners. We have concluded that while there are clearly differences in how farmer cooperative refiners are organized and are financed compared to other refiners, we are not able to make a determination that farmer cooperative refiners, as a class, face unique economic hardship. As discussed further below, we believe that the combination of flexibilities built into today's diesel program will be valuable to farmer cooperative refiners. To the extent any of the farmer cooperative refiners face economic hardship in complying with the diesel sulfur program, this determination can best be made on a case-by-case basis for each farmer cooperative refiner, as discussed further below.

As is the case for all refiners, we believe that farmer cooperative refiners will be able to benefit significantly from the several flexibility provisions discussed elsewhere in Section IV of this preamble. As we mentioned above, the farmer cooperative refiner with the smallest refinery appears to meet the criteria for status as a ''small refiner,'' and thus will likely be eligible for the special provisions discussed earlier (Section IV.C.1. above). The second smallest refinery owned by a farmer cooperative is located and markets all or most of its gasoline within the geographic GPA and, as such, is eligible for GPA low sulfur gasoline extension described in Section IV.B. above (if it meets the production and volume requirements for 15 ppm fuel). Alternatively, this refinery could participate in the temporary compliance option for diesel fuel described in Section IV.A. above.

The two other farmer cooperative refiners (as well as any other refiner) may participate in the temporary compliance option for diesel fuel and the averaging, banking, and trading provisions described above (Section IV.A.), potentially allowing them to postpone diesel desulfurization investments. If needed, any of the farmer cooperative refiners may also apply for case-by-case hardship relief (Section IV.C.3. below). Through such a case-by-case review, we will be in a better position to make a determination of whether a particular farmer cooperative refiner faced an economic hardship situation, as we would then have available to us specific financial information about each cooperative owner. If we determine that a cooperative refiner faced an economic

[171] See the Section VII.E below and regulatory language associated with this rule for detailed requirements for registration and application for small refiner status.

[172] ''Subsidiary'' here covers entities of which the parent company has 50 percent or greater ownership.

[173] We will evaluate each foreign refiner's documentation of crude oil capacity on an individual basis.

EXHIBIT J

hardship situation, we could then tailor any temporary hardship provisions to best suit the needs of that refiner. Given this combination of options and ''safety valves'' built into the diesel sulfur program, and the factors discussed below, we do not believe it is necessary to provide special provisions specifically for farmer cooperative refiners as a class.

Farmer cooperatives that own refineries, like all farmer cooperatives, are organized as a means for individual farmers (or local cooperatives owned by individual farmers) to collectively gain benefits in important aspects of their farming businesses—in this case, the production and distribution of the fuel needed for their operation. It should also be noted that the diesel fuel produced by farmer cooperative refiners is sold not only to farmers, but also to the wholesale petroleum market, for sale at service stations, truck stops, or fleets. Individual farmers and others become members of local cooperatives that provide a range of products and services to their members. These local cooperatives in turn often form the membership of larger, regional cooperatives, including those that own three of the four farmer cooperative refineries in the U.S.

Refiners that are also cooperative businesses are significantly different from other refiners in several respects. The key aspect is that several avenues for accessing capital used by many other refiners (in this case, the capital needed to carry out diesel fuel desulfurization projects in their refineries) are not available to, or are not practical for, cooperative refiners. In particular, farmer cooperatives, unlike publicly-held corporations, are generally not permitted to raise equity capital in the securities markets (that is, by selling stock). At the same time, the equity financing provided by the membership, usually a modest amount assessed from each member as a condition of membership, provides a return for the members only to the extent that the members purchase the products or services of the cooperative. Conventional investors that do not regularly patronize the cooperative have little incentive to provide investment from the outside, since their investment will not appreciate in value.

For farmer cooperatives, money for capital projects is generally raised internally as equity from members and as loans from banks or other financial institutions. In this sense, farmer cooperative refiners are similar to privately-held refining companies, which are also unable to raise capital by selling public stock. In the case of farmer cooperatives, equity capital is raised either by assessment of the members or, more often, by retaining a portion of the cooperative's earnings that would otherwise be distributed to the members (on the basis of how much business they have done with the cooperative). The amount of equity available to the cooperative, as well as the earning prospects of the cooperative, usually determine whether financial institutions will lend additional capital, how much money will be lent, and what terms the cooperative will have to agree to. For example, when a cooperative's equity is low and/or the farm economy is stressed (and thus the prospects for strong earnings performance by the cooperative are diminished) cooperatives can have difficulty competing among other potential borrowers for loans for large capital projects.

While the unique structural and financial characteristics of farmer cooperative refiners can present special challenges to these refiners, their status as cooperatives can also provide advantages not shared by other refiners. The same federal and state laws and regulations that place limitations on the financial avenues available to cooperatives also tend to include special provisions only available to cooperatives. These include special treatment for cooperatives under securities laws, antitrust laws, contractual marketing laws, and restrictive corporate entity laws, some or all of which may come into play in efforts to capitalize refinery desulfurization projects.

Also, the relatively large regionally-based cooperatives that own refineries have a variety of other business interests as well. This broader business base, which involves not only the refining and distribution of fuels but also a variety of other agricultural supply, processing, and related operations, may often provide an advantage to these larger cooperative refiners as compared to competing refiners that have little or no business beyond refining and fuel marketing. Finally, the three larger farmer cooperative refiners have developed several economic relationships among one another—including joint refinery ownership, a joint refinery operating agreement, and a joint fuel distribution and marketing organization—that together create greater options for financing than are available to many other refiners.

Based on the compliance option provisions in this action we do not believe that farmer cooperative refiners as a class face a disproportionate economic burden in complying with the diesel sulfur program. However, certain cooperative refiners may face additional economic obstacles, therefore the potential need exists for some financial assistance to farmer cooperative refiners from U.S. government programs. During interagency review, concerns were discussed relating to the uniqueness of the structure of farmer cooperative refineries and the key issue of accessing capital was identified. The U.S. Department of Agriculture (USDA) has indicated an interest and willingness to review its existing authorities for the potential mechanisms to provide financial assistance to refiner cooperatives who do invest in desulfurization programs. Congress and USDA have long recognized the unique circumstances of farmers and rural communities by establishing programs to provide assistance. This assistance would be primarily in the form of guaranteed loans, which could provide a significant source of funding for cooperative refiners to make capital investment in desulfurization. However, USDA's loan program is subject to limitations, including a $25 million annual cap on individual loans, so the cooperative refiners may have to acquire additional financing. EPA understands that USDA supports efforts, where appropriate, to provide assistance to farmer-owned cooperatives from other sources.

In conclusion, after reviewing this information, we have not been able to clearly distinguish a unique economic burden that today's program will place on farmer cooperative refiners, as a class, apart from other refiners, especially other refiners of similar size and/or those that are privately-held companies. However, as described above, several of the flexible provisions we have incorporated into the overall diesel sulfur program will be valuable to farmer cooperative refiners.

3. *General Hardship Provisions*

a. Temporary Waivers from Low Sulfur Diesel Requirements in Extreme Unforseen Circumstances

In this final rule, we are adopting a provision which, at our discretion, will permit domestic or foreign refiners to seek a temporary waiver from the highway diesel sulfur standards under certain rare circumstances. This waiver provision is similar to provisions in the reformulated gasoline (RFG) and low sulfur gasoline regulations. It is intended to provide refiners short-term relief in unanticipated circumstances—such as a refinery fire or a natural disaster—that cannot be reasonably foreseen now or in the near future.

EXHIBIT J

Under this provision, a refiner may seek permission to distribute highway diesel fuel that does not meet the applicable low sulfur standards for a brief time period. An approved waiver of this type could, for example, allow a refiner that has reached its maximum allowable production volume of 500 ppm sulfur fuel under the temporary compliance option to temporarily and modestly exceed that volume, so long as the other conditions described below were met. Such a request will be based on the refiner's inability to produce complying highway diesel fuel because of extreme and unusual circumstances outside the refiner's control that could not have been avoided through the exercise of due diligence. The request will also need to show that other avenues for mitigating the problem, such as purchase of credits toward compliance under the temporary compliance option, had been pursued and yet were insufficient.

As with other types of relief established in this rule, this type of temporary waiver will have to be designed to prevent fuel exceeding the 15 ppm standard from being used in 2007 and later vehicles. As with the small refiner hardship provisions described above, any such waiver must show that other sources of 15 ppm fuel exist in the refiner's market area to help reduce the risk that owners of 2007 and later diesel vehicles will have difficulty finding the 15 ppm fuel they need during the period of the waiver.

The conditions for obtaining a low sulfur diesel waiver are similar to those in the RFG and low sulfur gasoline regulations. These conditions are necessary and appropriate to ensure that any waivers that are granted are limited in scope, and that refiners do not gain economic benefits from a waiver. Therefore, refiners seeking a waiver must show that the waiver is in the public interest, that the refiner was not able to avoid the nonconformity, that it will make up the air quality detriment associated with the waiver, that it will make up any economic benefit from the waiver, and that it will meet the applicable diesel sulfur standards as expeditiously as possible.

b. Temporary Waivers Based on Extreme Hardship Circumstances

In addition to the provision for short-term relief in extreme unforseen circumstances, we are adopting a provision for relief based on extreme hardship circumstances. In developing our diesel sulfur program, we considered whether any refiners would face particular difficulty in complying with the standards in the lead time provided. As described earlier in this section, we concluded that refineries owned by small businesses will experience more difficulty in complying with the standards on time because they have less ability to raise the capital necessary for refinery investments, face proportionately higher costs because of poorer economies of scale, and are less able to successfully compete for limited engineering and construction resources. However, it is possible that other refiners that are not small refiners will also face particular difficulty in complying with the sulfur standards on time. Therefore, we are including in this final rule a provision which allows us, at our discretion, to grant temporary waivers from the diesel sulfur standards based on a showing of extreme hardship circumstances.

The extreme hardship provision allows any domestic or foreign refiner to request a waiver from the sulfur standards based on a showing of unusual circumstances that result in extreme hardship and significantly affect a refiner's ability to comply with the low sulfur diesel standards by June 1, 2006. An approved extreme hardship waiver may provide refiners with provisions similar to those for small refiners, or as with the waiver for extreme unforseen circumstances, may provide a greater allowance for producing 500 ppm (for sale only for use in pre-2007 vehicles) during the period the temporary compliance option is in effect. As with other relief provisions established in this rule, any waiver under this provision must be designed to prevent fuel exceeding the 15 ppm standard from being used in 2007 and later vehicles.

By providing short-term relief to those refiners that need additional time because they face hardship circumstances, we can adopt an overall program that reduces diesel fuel sulfur beginning in 2006 for the majority of the industry. However, we do not intend for this waiver provision to encourage refiners to delay planning and investments they would otherwise make. We do not expect to grant temporary waivers that apply to more than approximately one percent of the national highway diesel fuel pool in any given year.

The regulatory language for today's action includes a complete list of the information that must be included in a refiner's application for an extreme hardship waiver. If a refiner fails to provide all the information, as specified in the regulations, as part of its hardship application, we can deem the application void. The following are some examples of the types of information that must be contained in an application:

—The crude oil refining capacity and diesel fuel sulfur level at each of the refiner's refineries.

—Details on how the refiner plans to modify its current operation to achieve future diesel fuel sulfur levels.

—The anticipated timing for the overall project the refiner is proposing and key milestones to ultimately produce 100 percent of highway diesel fuel at the 15 ppm sulfur standard.

—The refiner's capital requirements for the proposed project

—Plans for financing the project and financial statements

—List of the areas where the refiner's diesel fuel will be sold.

We will consider several factors in our evaluation of the hardship waiver applications. Such factors will include whether a refinery's configuration is unique or atypical; the proportion of diesel fuel production relative to other refinery products; whether the refiner, its parent company, and its subsidiaries are faced with severe economic limitations (for example, a demonstrated inability to raise necessary capital or an unfavorable bond rating); steps the refiner has taken to attempt to comply with the standards, including efforts to obtain credits towards compliance. In addition, we will consider the total crude oil capacity of the refinery and its parent or subsidiary corporations, if any, in assessing the degree of hardship and the refiner's role in the diesel market. Finally, we will consider where the diesel fuel will be sold in evaluating the environmental impacts of granting a waiver.

This extreme hardship provision is intended to address unusual circumstances that should be apparent now or will emerge in the near future. Thus, refiners seeking additional time under this provision must apply for relief by June 1, 2002. Applicants for a hardship waiver must also submit a plan demonstrating how they will achieve the standards as quickly as possible. In submitting the plan, applicants must include a timetable for obtaining the necessary capital, contracting for engineering and construction resources, obtaining any necessary permits, and beginning and completing construction.

We will review and act on applications and, if a waiver is granted, will specify a time period, not to extend beyond May 31, 2010, for the waiver.

D. Technological Feasibility of the Low Sulfur Diesel Fuel Program

This section summarizes our assessment of the feasibility of refining

EXHIBIT J

and distributing diesel fuel with a sulfur content of no more than 15 ppm. Based on this evaluation, we believe it is technologically feasible for refiners to meet the 15 ppm sulfur standard in the lead time provided. We are summarizing our analysis here and we refer the reader to the RIA for more details.

1. *What Technology Will Refiners Use?*

Conventional diesel desulfurization technologies have been available and in use for many years. Conventional hydrotreating technology involves combining hydrogen with the distillate (material falling into the boiling range of diesel fuel) at moderate pressures and temperatures and flowing the mixture through a fixed bed of catalyst.

We project that all refiners will be technically capable of meeting the 15 ppm sulfur cap with extensions of the same conventional hydrotreating which they are using to meet the current highway diesel fuel standard of 500 ppm sulfur. This extension will likely mean adding a second stage of conventional hydrotreating. Converting an existing one-stage hydrotreater into a two-stage hydrotreater will involve adding an additional reactor as well as other, more minor units to support the new desulfurization unit. These units could include hydrogen plants, sulfur recovery plants, amine plants and sour water scrubbing facilities. All of these units are already operating in refineries, but may have to be expanded or enlarged. We also project that all refiners will utilize recently developed, high activity catalysts, which increase the amount of sulfur that can be removed relative to the catalysts which were available when the current desulfurization units were designed and built.

While still utilizing this conventional hydrotreating technology, we expect that some refiners (roughly 20 percent of current production volume) will decide to invest in a completely new two-stage hydrotreater rather than revamp their current unit. This could occur because the current hydrotreater is too old or designed to operate at too low a pressure, or because the refiner desires to expand production of highway diesel fuel.

The sufficiency of conventional hydrotreating to meet a 15 ppm sulfur cap with current diesel fuel blendstocks is based primarily on information provided by several refining technology vendors.[174] The vendors all projected that two-stage hydrotreating would be sufficient to meet a 15 ppm sulfur cap. However, their projections of hydrogen consumption and requisite reactor volume varied widely. Our projections for hydrogen consumption and reactor volume are near the lower end of the range and are essentially the same projections as were made in support of the proposed rule.

Many refiners commented that we had underestimated the cost of meeting the 15 ppm sulfur cap. They argued that higher pressure, thick walled reactors of greater volume would be needed and that hydrogen consumption would be much higher than we projected. With one exception, neither the refiners, nor the technology vendors provided any underlying catalyst performance data with which we could use to arbitrate between the varying projections. One vendor did submit catalyst performance data from a commercial unit processing a diesel fuel like that produced in the U.S. Such commercial data is very limited, as refiners are generally not currently producing diesel fuel at sulfur levels below 10 ppm with this technology from diesel fuel feedstocks typical of U.S. refiners. Some refiners are currently producing diesel fuel at sulfur levels below either 10 or 50 ppm. However, their diesel fuel blendstocks differ substantially in quality from those available in the U.S., so their experience cannot be extrapolated easily to producing sub-15 ppm sulfur diesel fuel in the U.S.

Based on our review of the limited catalyst performance data in the published literature and the one set of confidential data submitted, we believe that the projections of the more optimistic vendors are the most accurate for the 2006 timeframe. For example, the confidential commercial data indicated that five ppm sulfur levels could be achieved with two-stage hydrotreating a moderate hydrogen pressures despite the presence of a significant amount of light cycle oil (LCO). The key factor was the inclusion of a hydrogenation catalyst in the second stage, which saturated many of the poly-nuclear, aromatic rings in the diesel fuel, allowing the removal of sulfur from the most sterically hindered compounds. In addition, refiners that are able to defer production of 15 ppm diesel fuel through the purchase of credits will have the added benefit of being able to observe the operation of those hydrotreating units starting up in 2006. This should allow these refiners to be able to select from the best technologies which are employed in the first phase of the program.

In addition, alternative technologies are presently being developed which could produce additional savings for refiners that are able to delay production of 15 ppm fuel until 2010. Phillips 66 Company, for example, just announced that they are developing a version of their S-Zorb technology for diesel fuel desulfurization. This technology has been selected by at least one major refiner (Marathon-Ashland) to meet the Tier 2/low sulfur gasoline requirements. In conjunction with a DOE research program, Phillips is designing and constructing a commercially sized S-Zorb diesel fuel unit at their Borger refinery. This unit is currently scheduled for start-up in 2004. We believe that this technology could reduce the cost of meeting the 15 ppm cap by roughly 25 percent.

2. Have These Technologies Been Commercially Demonstrated?

As mentioned above, conventional diesel desulfurization technologies have been available and in use for many years. U.S. refiners have roughly seven years of experience with this technology in producing highway diesel fuel with less than 500 ppm sulfur. Refiners in California also have the same length of experience with meeting the California 500 ppm cap on sulfur and an additional aromatics standard.[175] To meet both sulfur and aromatics standards, refineries in California are producing highway and nonroad diesel fuel with an average sulfur level of 150 ppm.

Some refiners in Europe are producing a very low-sulfur, low aromatics diesel fuel for use in the cities in Sweden (Class I Swedish Diesel) using two-stage hydrotreating. This ''Swedish city diesel'' is averaging under 10 ppm sulfur and under 10 volume percent aromatics. While clearly demonstrating the feasibility of consistently producing diesel fuel with less than 10 ppm sulfur from selected feedstocks, there are a few differences between the Swedish fuel and typical U.S. diesel fuel. First, the tight aromatics specification applicable to Swedish City diesel fuel usually requires the use of ring-opening or dearomatization catalysts in the second stage of the two-stage hydrotreating unit. Second, Swedish Class I diesel fuel also must meet a tight density specification. Third, it is not clear

[174] Technology vendors were invited to submit projections of technology and cost to two studies of the cost of diesel fuel desulfurization by Mathpro, Inc. One study was performed for EMA, and the other for the National Petroleum Council.

[175] California allows refiners to use an engine test to certify an alternative fuel mixture which meets or exceeds the NO_X reducing performance of a 10 volume percent maximum aromatics and a 500 ppm maximum sulfur diesel fuel.

EXHIBIT J

whether any refiner is producing a large fraction of their distillate production to this specification. Thus, the European experience demonstrates the efficacy of the two-stage process and its ability to produce very low sulfur diesel fuel. However, doing so without saturating most of the aromatics present and with heavier feedstock has only been demonstrated in pilot plants and not commercially. Even this pilot plant data has not been available for us to evaluate directly, due to vendors' competitiveness concerns.

Europe has adopted a 50 ppm cap sulfur standard for all diesel fuel which takes effect in 2005. Some countries, including England, have implemented tax incentives for refiners to produce this fuel sooner. The majority of diesel fuel in England already meets the 50 ppm specification. Refiners have reported no troubles with this technology. This diesel fuel is being produced in one-stage hydrotreaters. However, as mentioned above, European diesel fuel contains less heavier compounds than diesel fuel in the U.S., so the use of one-stage conventional hydrotreating to meet very low sulfur levels is applicable, but not sufficient to demonstrate feasibility in the U.S. Germany has also established a tax incentive, but for diesel fuel containing 10 ppm or less sulfur. One European technology vendor indicated that they have already licensed two desulfurization units to German refiners planning to produce diesel fuel to obtain this tax credit. Europe also is considering a 10 ppm sulfur cap to take effect later in the decade. However, no refiner is currently producing number two diesel fuel to this specification.

Phillips Petroleum is currently in the process of designing and constructing a commercial sized S-Zorb unit to produce sub-15 ppm diesel fuel at their Borger, Texas refinery. This plant is scheduled to begin commercial operation in 2004. This may not be in time to give refiners sufficient confidence in this novel process to rely on it to meet the 2006 deadline. However, this process, with its attendant hydrogen, cost, and global emission savings should be available for those refiners that are able to defer investment under the temporary compliance option and hardship provisions of today's rule. While we are confident that this and other technology will be available to meet the requirements of today's rule, EPA will work with the Department of Energy, refiners and technology providers to continue to monitor and analyze the progress in further developing and implementing this new diesel desulfurization technology. This will allow us to improve our understanding of how this new technology can be employed to enhance the implementation of this program.

3. Feasibility of Distributing Low Sulfur Highway Diesel Fuel

We believe that with relatively minor changes and associated costs, the existing distribution system will be capable of adequately managing sulfur contamination during the transportation of 15 ppm highway diesel fuel from the refinery through to the end-user. Further, we believe that the existing system is capable of handling two grades of highway diesel fuel (500 ppm and 15 ppm sulfur cap) in a limited fashion during the transition period of the sulfur program at acceptable cost with the addition of storage tanks at a fraction of distributor facilities.

The following minor changes in distribution practices will be needed as a result of today's rule during the transition years of the fuel program when various hardship and optional compliance provisions are in effect and thereafter:

—To adequately separate shipments of highway diesel fuel from shipments of higher sulfur products, pipeline operators will need to increase the amount of highway diesel fuel that they downgrade to a lower value product.

—Instead of cutting the mixture of jet fuel and highway diesel fuel that results during pipeline shipments of these products into the highway diesel pool, pipeline operators will need to segregate this mixture and sell it into the nonroad diesel pool. This change will necessitate the addition at some terminals of small tanks to handle the mixture of jet fuel and highway diesel fuel.

—Terminal operators will need to perform additional quality control testing to ensure compliance with the 15 ppm sulfur cap.

We also recognize that tank truck operators will need to more carefully and consistently observe current industry practices to limit contamination during the transport of 15 ppm sulfur highway diesel fuel. However, because these practices already exist and need only to be better enforced by distributors, we continue to believe that this can be accomplished at insignificant cost. We believe that there will not be a significant increase in the volume of highway diesel fuel discovered to exceed the sulfur standard downstream of the refinery as a result of today's rule. Distributors will quickly optimize the distribution system using the means described above to avoid creating additional volumes of out of specification product.

To accommodate two grades of highway diesel fuel during the transition period, additional storage tanks will need to be added at some refineries, terminals, bulk plants, and truck stops. There are significant costs associated with the addition of tanks which are fully accounted for during the transition period (see Section V). Commenters on the NPRM stated that in addition to the substantial economic burden that adding additional storage tanks would represent for some distributors, limitations in available space and permitting restrictions could preclude some distributors from installing additional tanks. This transition is also an added concern for those users of specialty fuels (i.e., military fuels, etc.) who currently compete for the limited storage tanks because these fuels must be segregated. We believe that the burden of adding new storage tanks to the system is made manageable by the fact that not all distributors will need to handle 500 ppm as well as 15 ppm sulfur highway diesel fuel during this time period. Marketplace forces will determine which facilities assume the additional burden of handling both grades of highway diesel fuel. Those facilities for which the addition of a storage tank would represent an unacceptable burden would opt not to serve the 500 ppm sulfur highway diesel market during the transition years.

We received several comments on the proposed rule that substantial uncertainties exist regarding the ability of the distribution system to adapt to the added hardship of limiting sulfur contamination of highway diesel fuel meeting a 15 ppm sulfur cap. These commenters noted that under today's rule other products in the distribution system would have a sulfur content of over 300 times the 15 ppm highway diesel fuel sulfur cap, and that unavoidable mixing of small quantities of these high sulfur products into highway diesel fuel could easily cause the 15 ppm sulfur cap to be exceeded. To illustrate the magnitude of the challenge, these commenters noted that currently the maximum sulfur content of any product that shares the distribution system with highway diesel fuel is no more than 10 times the current 500 ppm sulfur cap for highway diesel fuel.[176] Some commenters stated that the only way to adequately limit sulfur contamination in the distribution

[176] Nonroad diesel fuel has a sulfur cap of 5,000 ppm versus a 500 ppm for current highway diesel fuel.

EXHIBIT J

of diesel fuel with a 15 ppm sulfur cap may be to create a completely segregated system (at an unacceptably high cost). These commenters stated that unavoidable contamination could cause many batches of highway diesel fuel to be noncompliant with the 15 ppm cap resulting in shortages and high costs. Some commenters stated that additional evaluation is needed to determine the capability of the distribution system to limit contamination to the very low levels necessitated by today's rule.

While we acknowledge that today's rule will pose a substantial new challenge to the distribution system, we believe that the additional measures outlined in this section will substantially address issues associated with adequately limiting sulfur contamination during the distribution of 15 ppm sulfur highway diesel fuel.[177] Its true that not all of the potential minute sources of sulfur contamination in the distribution sources have been identified and that the cumulative magnitude from these sources is uncertain. However, we believe that the contamination from such sources, while made more significant by the implementation of the 15 ppm sulfur cap, is not of a sufficient magnitude to jeopardize the feasibility of distributing low sulfur highway diesel fuel. We will work with the Department of Energy, refiners and others involved in diesel fuel distribution to analyze, compile data, and conduct additional research, where appropriate, to not only more fully understand all sources of contamination and deliverability in the distribution of diesel fuel below the 15ppm cap, but also their impact on the deliverability of other fuels, including specialty military fuels. This information will be used, in conjunction with information being developed on the operation of emission control devices (which are affected by exposure to sulfur), to monitor progress on the successful implementation of this final rule which depends on an integrated vehicle/fuel systems approach. Please refer to Section V.D. on the costs of today's rule to the distribution system, and to the Regulatory Impact Analysis and Response to Comments documents for additional discussion regarding the feasibility of distributing highway diesel fuel with a 15 ppm sulfur cap.

[177] See the Response to Comments document for this rule.

E. What Are the Potential Impacts of the Low Sulfur Diesel Program on Lubricity and Other Fuel Properties?

1. What Is Lubricity and Why Might It Be a Concern?

Engine manufacturers depend on diesel fuel lubricity properties to lubricate and protect moving parts within fuel pumps and injection systems for reliable performance. Unit injector systems and in-line pumps, commonly used in heavy-duty engines, are actuated by cams lubricated with crankcase oil, and have minimal sensitivity to fuel lubricity. However, rotary and distributor type pumps, commonly used in light and medium-duty diesel engines, are completely fuel lubricated, resulting in high sensitivity to fuel lubricity.

In the United States, there is no government or industry standard for diesel fuel lubricity. Thus, specifications for lubricity are determined by the market. Since the beginning of the 500 ppm sulfur highway diesel program in 1993, fuel system producers, engine and vehicle manufacturers, and the military have been working with the American Society for Testing and Materials (ASTM) to develop protocols and standards for diesel fuel lubricity in its D–975 specifications for diesel fuel. Although the ASTM has not yet adopted specific protocols and standards, we understand that refiners have been treating diesel fuel with lubricity additives on a batch to batch basis, when poor lubricity fuel is expected. In addition, the military has found that traditional corrosion inhibitor additives that it uses in its fuels have been highly effective in reducing fuel system component wear. Some commenters expressed concern about the impacts of a 15 ppm standard on fuel lubricity.

Experience has shown that it is very rare for a naturally high-sulfur fuel to have poor lubricity, although, most studies show relatively poor overall correlation between sulfur content and lubricity. Considerable research remains to be performed for a better understanding of the fuel components most responsible for lubricity. Consequently, we are uncertain about the potential impacts of the 15 ppm sulfur standard on fuel lubricity. There is evidence that the typical process used to remove sulfur from diesel fuel—hydrotreating—can impact lubricity depending on the severity of the treatment process and characteristics of the crude. Because refiners will likely rely on hydrotreating to achieve the proposed sulfur limit, there may be reductions in the concentration of those components of diesel fuel which contribute to adequate lubricity. As a result, the lubricity of some batches of fuel may be reduced compared to today's levels, resulting in an increased need for the use of lubricity additives in highway diesel fuel. In response to the proposal, all comments submitted regarding lubricity either stated or implied that the proposed sulfur standard of 15 ppm would likely cause the refined fuel to have lubricity characteristics that would be inadequate to protect fuel injection equipment, and that mitigation measures such as lubricity additives would be necessary. However, the commenters suggested varied approaches for addressing lubricity. For example, some suggested that we need to establish a lubricity requirement by regulation, but others suggested that the current voluntary (market) system would be adequate. The Department of Defense recommended that we encourage the industry (ASTM) to adopt lubricity protocols and standards before the implementation date of the low sulfur fuel established by today's action. Other suggested approaches included incorporation of biodiesel as a solution to the lubricity issue, and the need to further examine the issues.

Blending small amounts of lubricity-enhancing additives increases the lubricity of poor-lubricity fuels to acceptable levels. These additives are available in today's market, are effective, and are in widespread use around the world. For example, in the U.S., we understand that refiners are treating diesel fuel with lubricity additives on a batch to batch basis, when poor lubricity fuel is expected. Other examples include Sweden, Canada, and the U.S. military. Since 1991, the use of lubricity additives in Sweden's 10 ppm sulfur Class I fuel and 50 ppm sulfur Class II fuel has resulted in acceptable equipment durability.[178] Since 1997, Canada has required that its 500 ppm sulfur diesel fuel not meeting a minimum lubricity be treated with lubricity additives. The U.S. military has found that the traditional corrosion inhibitor additives that it uses in its fuels have been highly effective in reducing fuel system component wear.

2. Today's Action on Lubricity: A Voluntary Approach

We have decided to not establish a lubricity standard in today's action, but have included a 0.2 cents per gallon cost in our calculations for the economic

[178] See letter from MTC to Michael P. Walsh, dated October 16, 2000. In public docket, document IV–G–42.

EXHIBIT J

impact to account for the potential increased use of lubricity additives (see section V.D.2). We believe the best approach is to allow the industry and the market to address the lubricity issue in the most economical manner, while avoiding an additional regulatory scheme. A voluntary approach should provide adequate customer protection from engine failures due to low lubricity, while providing the maximum flexibility for the industry. This approach will be a continuation of current industry practices for diesel fuel produced to meet the current federal and California 500 ppm sulfur diesel fuel specifications, and benefits from the considerable experience gained since 1993. It will also include any new specifications and test procedures that we expect will be adopted by the American Society for Testing and Materials (ASTM) regarding lubricity of highway diesel fuel quality.

We do not believe that an EPA regulation for lubricity is appropriate for several reasons. First, the expertise and mechanism for a lubricity standard already exist in the industry. According to the comments, the industry has been working on a lubricity specification for ASTM D–975, and low cost remedies for poor lubricity have already been proven and are already being used around the world. Although some commenters expressed concerns that the ASTM process might move too slowly to establish a lubricity specification by 2006, we fully expect the refining industry, engine manufacturers and end users to work together to resolve any issues as part of their normal process in dealing with customer and supplier fuel quality issues. Today's action will increase the urgency of those working to establish an ASTM D–975 lubricity specification, and we believe they will do so in time for the production and distribution of the low sulfur highway diesel fuel. We will do our part to encourage the ASTM process be brought to a successful conclusion.

Second, we have no firm basis to justify a lubricity specification in today's action. One such basis might be adequate demonstration that a lubricity level below or above a certain specification would either cause emissions to increase, or hinder the operation of emission control equipment. However, we have no evidence that lubricity impacts emissions, or emission control equipment. This issue is primarily a concern about equipment performance. Equipment performance is more appropriately addressed by the industry rather than government regulation by this Agency.

Third, even if we had a statutory basis to justify a lubricity standard, we are concerned that establishing an EPA lubricity regulation would provoke the same disagreements that the industry is now engaged in its efforts to establish an ASTM D–975 specification. We are in no better position to judge those issues than the industry experts who are already involved. Further, once a specification is put into the regulations and the industry subsequently determines that the specification should be changed, based on new information or circumstances, the burden would be on us to amend the mandated specification by rulemaking. This is a significant burden to put on the Agency for an engine performance issue that can and should be resolved by the industry without government intervention.

Subsequent to the close of the comment period another issue related to lubricity concerns was raised to the Agency. These concerns related to potential incompatibilities in old vehicles of the new engine oils the industry hopes to develop for use in the new 2007 and later model year vehicles. Much of the ash in today's motor oil results from the need to control acidification of the engine oil (maintain total base number, or TBN control), which is in large part a function of the sulfur content of the fuel and the sulfuric acid that it forms. Without the ability to control acidification of the engine oil, engine wear increases significantly. The ash in the oil, however, will tend to shorten the maintenance intervals for particulate filters to remove built up ash on new 2007 and later model year vehicles. At the same time, engines operated on low sulfur fuel have much less need for TBN control and the high ash levels that result. Consequently, manufacturers are investigating with the lubricant industry the potential of lower ash oils for use in engines operated on low sulfur diesel fuel and equipped with particulate traps. If the new oil developed is not ''backwards compatible'' to sufficiently control acidification and wear in the pre-existing fleet of vehicles on the road that may still be operated on high sulfur diesel fuel for the first few years of the program, then two grades of motor oil would have to be on the market simultaneously. This has caused some stakeholders to raise vehicle performance and durability concerns that might result from using the new oil in the old vehicles—namely ''mis-oiling.''

Since the engine and lubricant industries still have a number of years to develop these new oil formulations, it is still premature to determine whether or not the new oils will be backwards compatible and whether mis-oiling would raise any serious concerns. While this would not appear to be an air quality concern and as such something the Agency generally leaves up to the industry to resolve, we will nevertheless offer to work with the industry and industry associations on this issue over the coming years.'' EPA anticipates that engine manufacturers would likely provide engine labels to distinguish low ash oil from high ash oil because misoiling could result in engine damage.

3. What Are Today's Actions on Fuel Properties Other Than Sulfur?

We are not taking action today on any fuel properties other than sulfur. We have examined the impact of fuel properties other than sulfur, such as aromatics, on the materials used in engines and fuel supply systems. We do not believe there will be impacts on materials from such other fuel properties.

While there were some problems with leaks from fuel pump O-ring seals made of a certain material (Nitrile) after the introduction of 500 ppm sulfur diesel fuel in the United States in 1993, these issues have since been addressed by equipment manufacturers who switched to materials that are compatible with low aromatic fuels. The leakage from the Nitrile seals was determined to be due to low aromatics levels in some 500 ppm sulfur fuel, not the low sulfur levels. In the process of lowering the sulfur content of some fuel, some of the aromatics had also been removed. Normally, the aromatics in the fuel penetrate the Nitrile material and cause it to swell, thereby providing a seal with the throttle shaft. When low-aromatics fuel is used after conventional fuel has been used, the aromatics already in the swelled O-ring will leach out into the low-aromatics fuel. Subsequently, the Nitrile O-ring will shrink and pull away, thus causing leaks, or the stress on the O-ring during the leaching process will cause it to crack and leak. Not all 500 ppm sulfur fuels caused this problem, because the amount and type of aromatics varied. Fuel pumps using a different material (Viton) for the seals did not experience leakage. We believe that no additional problems will occur with a change of fuel from 500 to 15 ppm sulfur.

F. How Are State Programs Affected by the Low Sulfur Diesel Program?

1. State Preemption

Section 211(c)(4)(A) of the CAA prohibits states (and political

EXHIBIT J

subdivisions of states) from prescribing or attempting to enforce controls or prohibitions respecting any fuel characteristic or component if EPA has prescribed a control or prohibition applicable to such fuel characteristic or component under section 211(c)(1). This preemption applies to all states except California, as explained in section 211(c)(4)(B). For states other than California, the Act provides two mechanisms for avoiding preemption. First, section 211(c)(4)(A)(ii) creates an exception to preemption for state prohibitions or controls that are identical [179] to the prohibition or control adopted by EPA. Second, states may seek EPA approval of SIP revisions containing fuel control measures, as described in section 211(c)(4)(C). We may approve such SIP revisions, and thereby ''waive'' preemption, only if it finds the state control or prohibition ''is necessary to achieve the national primary or secondary ambient air quality standard which the plan implements.''

When we adopted the current highway diesel fuel sulfur standard of 500 ppm pursuant to our authority under section 211(c)(1) of the CAA in 1990, States were preempted from also doing so under the provisions of section 211(c)(4)(A). The 15 ppm highway diesel fuel sulfur standard promulgated today modifies the existing standard and, as a result, do not initiate any new preemption of state authority. Today's action continues the explicit preemption under section 211(c)(4)(A) of state actions to prescribe or enforce highway diesel fuel sulfur controls. States other than California with highway diesel fuel sulfur control programs not already approved into their SIPs are preempted under Section 211(c)(4)(A) and will therefore need to obtain a waiver from us under the provisions described in section 211(c)(4)(C) for all state fuel sulfur control measures, unless the state control or prohibition is identical to ours.

Aside from the explicit preemption in Section 211(c)(4)(A), a court could also consider whether a state sulfur control is implicitly preempted under the Supremacy Clause of the U.S. Constitution. Courts have determined that a state law is preempted by federal law where the state requirement actually conflicts with federal law by preventing compliance with both federal and state requirements, or by standing as an obstacle to accomplishment of Congressional objectives. A court could thus consider whether a given state sulfur control is preempted, notwithstanding waiver of preemption under 211(c)(4)(C), if it places such significant cost and investment burdens on refiners that refiners cannot meet both state and federal requirements in time, or if the state control would otherwise meet the criteria for conflict preemption.

2. What Provisions Apply in Alaska?

There are important nationwide environmental and public health benefits that will be achieved with cleaner diesel engines and fuel, particularly from reduced particulate emissions, nitrogen oxides, and air toxics (as further discussed in section II). Therefore, it is also important to implement this program in Alaska. Any 2007 and later model year diesel vehicles in Alaska, or driven to Alaska, must be fueled with low sulfur highway diesel, or risk potential damage to the aftertreatment technologies or even the engines themselves. Although the engine standards established today are not based upon different technology and cost implications for Alaska as compared to the rest of the country, the low sulfur fuel program has different implications.

Unlike the rest of the nation, Alaska is currently exempt from the 500 ppm sulfur standard for highway diesel fuel and dye requirements. Since the beginning of the 500 ppm highway diesel fuel program, we have granted Alaska exemptions from meeting the sulfur standard and dye requirements, because of its unique geographical, meteorological, air quality, and economic factors. (These unique factors are discussed generally in this section, and in more detail in the RIA.) Because of these unique factors, we are establishing in today's action an alternative option for implementing the low sulfur fuel program in Alaska.

We are providing the State of Alaska an opportunity to develop an alternative low sulfur transition plan. We intend to facilitate the development of this plan by working in close cooperation with the state and key stakeholders. This plan must ensure that sufficient supplies of low sulfur diesel fuel are available in Alaska to meet the demand of any new 2007 and later model year diesel vehicles. Given that Alaska's demand for highway diesel fuel is very low and only a small number of new diesel vehicles are introduced in Alaska each year, it may be possible to develop an alternative implementation plan for Alaska in the early years of the program that provides low sulfur diesel only in sufficient quantities to meet the demand from the small number of new diesel vehicles. This would give Alaska refiners more flexibility during the transition period because they would not have to desulfurize the entire highway diesel volume. Our goal in offering this additional flexibility is to transition Alaska into the low sulfur fuel program in a manner that minimizes costs, while still ensuring that the new vehicles receive the low sulfur fuel they need. We expect that the transition plan will begin to be implemented at the same time as the national program, but the state will have an opportunity to determine what volumes of low sulfur fuel must be supplied, and in what timeframes, in different areas of the state.

At a minimum, this transition plan must: (1) Ensure an adequate supply (either through production or imports) of 15 ppm fuel to meet the demand of any 2007 or later model year vehicles, (2) ensure sufficient retail availability of low sulfur fuel for new vehicles in Alaska, (3) address the growth of supply and availability over time as more new vehicles enter the fleet, (4) include measures to ensure segregation of the 15 ppm fuel and avoid contamination and misfueling, and (5) ensure enforceability. We anticipate that, to develop a workable transition plan, the state will likely work in close cooperation with refiners and other key stakeholders, including retailers, distributors, truckers, engine manufacturers, environmental groups, and other interested groups. For example, the state will likely rely on input from the trucking industry in determining the expected low sulfur fuel volume needed in Alaska, based on the anticipated number of new vehicles, and how this volume is expected to grow during the first few years of the program. Similarly, the state will likely rely on the Alaska refiners' input regarding plans for supplying (either through production or imports) low sulfur fuel to meet the expected demand. Further, the state will likely rely on input and cooperation from retailers and distributors to determine at which locations the low sulfur fuel should be made available. Retailers offering low sulfur fuel will have to take measures to prevent misfueling, such as pump labeling, which must include

[179] In evaluating whether a state fuel prohibition or control is ''identical'' to a prohibition or control adopted by us, we might consider but is not limited to the following factors in comparing the measures: (1) The level of an emission reduction or pollution control standard for any particular batch of diesel fuel; (2) the use of ''per gallon'' or ''averaged'' amounts in setting that level; (3) the lead time allowed to the affected industry for compliance; (4) the test method(s) and sampling requirements used in determining compliance; and (5) reporting and recordkeeping requirements.

EXHIBIT J

provisions that are at least as stringent as those required of retailers nationally by the regulations and as described in section VII. Similarly, all parties in the distribution system must ensure the low sulfur fuel remains segregated and must take measures to prevent sulfur contamination, in a manner that is at least as stringent as that required nationally by the regulations and as described in section VII.

If the state anticipates that the primary demand for low sulfur fuel will be along the highway system (e.g., to address truck traffic from the lower-48 states) in the early years of the program, then the initial stages of the transition plan could be focused in these areas. We believe it would be appropriate for the state to consider an extended transition schedule for implementing the low sulfur program in rural Alaska, as part of the state's overall plan, based on when they anticipate the introduction of a significant number of 2007 and later model year vehicles in the remote areas.

Under this approach, the state will be given the opportunity to develop such a transition plan, as an alternative to the national program, and submit it to us for approval. We intend to help facilitate the development of the plan, by working closely with the state and the relevant stakeholders so they will have an opportunity to address our concerns in their submittal. It is our intent that any flexibility that is available to small refiners nationwide (as described in Section IV) will also be available to small refiners in Alaska under an approved alternative transition plan. To ensure that refineries and other affected parties will have certainty regarding their regulatory requirements with adequate lead time, Alaska must submit this plan by April 1, 2002 (approximately one year after the effective date of today's rule). If Alaska submits such a plan to us within one year, and if it provides a reasonable alternative as described above, we will conduct a rulemaking with notice for public comment and then publish a final rule promulgating the new regulatory scheme for Alaska. Our intent is to issue such a final rule within one year of Alaska's submittal of the plan. However, if the state chooses not to submit an alternative plan, or if the plan it submits does not provide a reasonable alternative for Alaska as described above, then refiners and other regulated parties in Alaska will be subject to the national program, including the implementation schedule established in today's action, without further regulatory action.

a. Today's Action Regarding the 500 ppm Standard in Alaska

We are extending the existing temporary exemption from the current diesel fuel sulfur standard of 500 ppm for the areas of Alaska served by the Federal Aid Highway System (FAHS) to the effective date for the new standard (*i.e.,* June 1, 2006 at the refinery level; July 15, 2006 at the terminal level; and September 1, 2006 at all downstream locations). While Alaska submitted a petition for a permanent exemption from the 500 ppm standard for these areas, we are not taking further action on that petition. Our goal is to take action on that petition in a way that minimizes costs through Alaska's transition to the new low sulfur program. The cost of compliance could be reduced if Alaska refiners were given the flexibility to meet the low sulfur standard in one step, rather than two steps (*i.e.,* once for the current 500 ppm sulfur standard in 2004 when the temporary exemption expires, and again for the new 15 ppm standard in 2006).

As already discussed, we are allowing Alaska to develop an alternative transition plan for implementing the low sulfur diesel fuel program. During such a transition period, it is possible that both low sulfur diesel fuel (for 2007 and later model year vehicles) and higher sulfur (for older vehicles) highway fuels might be available in Alaska. To avoid the two-step sulfur program described above during an alternative transition period, we will consider additional extensions to the temporary exemption of the 500 ppm standard beyond 2006 (*e.g.,* for that portion of the highway diesel pool that is available for the pre-2007 vehicles) during Alaska's transition period. We will make a decision on any additional temporary extensions, if appropriate, in the context of the separate rulemaking taking action on the alternative transition plan submitted by Alaska.

As in previous actions to grant Alaska sulfur exemptions, we will not base any vehicle or engine recall on emissions exceedences caused by the use of high-sulfur (>500 ppm) fuel in Alaska during the period of the temporary sulfur exemption. Our in-use testing goals are to establish whether representative engines, when properly maintained and used, will meet emission standards for their useful lives. These goals are consistent with the requirements for recall outlined in Section 207(c)(1) of the CAA. Further, manufacturers may have a reasonable basis for denying emission related warranties where damage or failures are caused by the use of high sulfur fuel in Alaska.

The Engine Manufacturers Association commented that the level of protection provided to engine manufacturers under the current exemption for Alaska and the proposal, as described above, falls short of what is reasonable and necessary. It asserted that the use of high sulfur diesel fuel by an engine should raise a ''rebuttable presumption'' that the fuel has caused the engine failure, and that EPA should have the burden of rebutting that presumption. It also asserted that the emissions warranty is a regulatory requirement under Section 207, that only EPA has the authority to exclude claims based on the use of high sulfur diesel fuel. We understand and concur with the manufacturers' concerns about in-use testing of engines operated in an area exempt from fuel sulfur requirements. Consequently, we affirm that, for recall purposes, we will not seek to conduct or cause the in-use testing of engines we know have been exposed to high sulfur fuels. We will likely screen any engines used in our testing program to see if they have been operated in the exempt area. We believe we can readily obtain sufficient samples of engines without testing engines from exempt areas. Also, in any recall that we order, manufacturers have the option of requesting a public hearing. The use of engines that have seen high sulfur fuel will increase the likelihood of a recall hearing. We expect manufacturers to scrutinize any test engines for sulfur usage that were used to justify an ordered recall. In reviewing the warranty concerns of the Engine Manufacturers Association, we have determined that our position regarding warranties, as previously stated and described above, is consistent with section 207(a) and (b) of the CAA and does not require any new or amended regulatory language to implement.

Today's action also grants Alaska's request for a permanent exemption from the dye requirement of 40 CFR 80.29 and 40 CFR 80.446 for the entire state. The costs of complying with the low sulfur (both the current 500 ppm sulfur and new 15 ppm sulfur) diesel fuel requirements could be reduced significantly if Alaska were not required to dye the non-highway fuel. Dye contamination of other fuels, particularly jet fuel, is a serious potential problem. This is a serious issue in Alaska since the same transport and storage tanks used for jet fuel (which is more than half of Alaska's distillate market) are generally also used for other diesel products, including off-highway diesel products which are required to be dyed under the current

EXHIBIT J

national program. This issue is discussed further in the RIA (Chapter VIII).

b. Why Are We Treating Alaska Uniquely?

Section 211(i)(4) of the Clean Air Act (CAA) provides that the states of Alaska and Hawaii may seek an exemption from the diesel fuel sulfur standard (500 ppm as specified in section 211(i)) in the same manner as provided in section 325 of the CAA. The requested exemption could be granted if EPA determines that compliance with such requirement is not feasible or is unreasonable due to unique geographical, meteorological, or economic factors of the territory, or other local factors as EPA considers significant.

On February 12, 1993, Alaska submitted a petition under section 325 of the CAA to exempt highway vehicle diesel fuel in Alaska from paragraphs (1) and (2) of section 211(i) of the CAA, except for the minimum cetane index requirement.[180] The petition requested that we temporarily exempt highway vehicle diesel fuel in communities served by the FAHS from meeting the sulfur content (500 ppm) specified in section 211(i) of the CAA and the dye requirement for non-highway diesel fuel of 40 CFR 80.29, until October 1, 1996. The petition also requested a permanent exemption from those requirements for areas of Alaska not reachable by the FAHS'the remote areas. On March 22, 1994, (59 FR 13610), we granted the petition based on geographical, meteorological, air quality, and economic factors unique to Alaska.

On December 12, 1995, Alaska submitted a petition for a permanent exemption for all areas of the state served by the FAHS, that is, those areas covered only by the temporary exemption. On August 19, 1996, we extended the temporary exemption until October 1, 1998 (61 FR 42812), to give us time to consider comments to that petition that were subsequently submitted by stakeholders. On April 28, 1998 (63 FR 23241) we proposed to grant the petition for permanent exemption. Substantial public comments and substantive new information were submitted in response to the proposal. To give us time to consider those comments and new information, we extended the temporary exemption for another nine months until July 1, 1999 (September 16, 1998, 63 FR 49459). During this time period, we started work on a nationwide rule to consider more stringent diesel fuel requirements, particularly for the sulfur content (today's action). To coordinate the decision on Alaska's request for a permanent exemption with the new nationwide rule on diesel fuel quality, we extended the temporary exemption until January 1, 2004 (June 25, 1999, 64 FR 34126).

As discussed in the previous section, in today's action we are extending the temporary exemption from the 500 ppm diesel fuel sulfur standard to the effective date for the new nationwide 15 ppm diesel fuel sulfur standard in 2006. While it is important to implement in Alaska the cleaner diesel engines and fuel of today's action, our goal is to take action on the petition in a way that minimizes costs through Alaska's transition to the new low sulfur program. The cost of compliance could be reduced if Alaska refiners were given the flexibility to meet the low sulfur standard in one step (i.e., going straight from uncontrolled levels to the 15 ppm sulfur standard), rather than in two steps. We considered the prior public comments we received as a result of our previous notices and actions regarding exemptions from the 500 ppm sulfur standard for highway diesel fuel in Alaska (see RIA).

Unlike in the rest of the country, diesel fuel consumption for highway use in Alaska represents only five percent of the State's total distillate fuel consumption. Aviation and marine applications, power generation and heating consume most of the distillate, while Alaska's highway diesel vehicle fleet is relatively small, particularly outside the FAHS. The state estimates that there are less than 9000 diesel vehicles in the entire state, with less than 600 of these vehicles in all of rural Alaska. The state also indicates that new model vehicles are introduced into the Alaska market at a slower rate than elsewhere, thus Alaska does not need to transition its highway fuel to low sulfur as quickly as the rest of the nation.

Most of the fuel consumed in Alaska is produced by refineries located in Alaska. This is primarily because of the more severe cloud point specification needed for the extremely low temperatures experienced in much of Alaska during the winter and the high cost to import fuel that is produced elsewhere. There are four commercial refineries in Alaska. Only one of these refineries currently has any desulfurization capacity, which is relatively small. Consequently, because these refineries will have to reduce sulfur from uncontrolled levels to meet the new 15 ppm standard established by today's action, these refineries could incur substantially higher costs than those in the rest of the nation. Given the very small highway diesel demand, however, it is doubtful that more than one or two Alaska refineries will choose to produce low sulfur highway fuel, and these refiners could even decide to import it from refineries outside of Alaska.

Further, Alaska's fuel distribution system faces many unique challenges. Unlike the rest of the country, because of its current exemption from the 500 ppm sulfur standard and dye requirements, Alaska does not currently segregate highway diesel fuel from that used for off-road, marine, heating oil, and other distillate uses. Therefore, the distribution system costs for segregating a low sulfur grade of diesel for highway uses will be significant. The existing fuel storage facilities limit the number of fuel types that can be stored. In addition to significant obstacles to expanding tankage in Alaska, the cost of constructing separate storage facilities, and providing separate tanks for transporting low sulfur diesel fuel (e.g., by barge or truck), could be significant. Most of Alaska's communities rely on barge deliveries, and ice formation on the navigable waters during the winter months restricts fuel delivery to these areas. Construction costs are 30 percent higher in Alaska than in the lower-48 states, due to higher costs for freight deliveries, materials, electrical, mechanical, and labor. There is also a shorter period of time during which construction can occur, because of seasonal extremes in temperature and the amount of daily sunlight.

The severe impacts to Alaska's fuel distribution system of implementing a low sulfur requirement for highway diesel fuel would likely occur whether we require the current 500 ppm standard or the new 15 ppm standard. The impacts to Alaska's refineries and fuel importers are greater at 15 ppm than at 500 ppm. It is likely that the refiners and fuel importers would have a significant incremental impact if we required Alaska to implement the 500 ppm diesel fuel sulfur standard in 2004 when the current exemption expires, and the 15 ppm diesel fuel sulfur standard in 2006 when the new national requirement becomes effective, rather than only once for the 15 ppm diesel fuel sulfur standard in 2006.

[180] Copies of information regarding Alaska's petition for exemption, subsequent requests by Alaska, public comments received, and actions by EPA area available in public docket A–96–26.

EXHIBIT J

3. What Provisions Apply in American Samoa, Guam, and the Commonwealth of Northern Mariana Islands?

a. Today's Action Regarding the Highway Diesel Fuel Standard in the Territories

As we proposed, today's action excludes American Samoa, Guam and the Commonwealth of Northern Mariana Islands from the new diesel fuel sulfur requirement of 15 ppm and the 2007 heavy-duty diesel vehicle and engine emissions standards, and other requirements associated with those emission standards. The territories will continue to have access to 2006 heavy-duty diesel vehicle and engine technologies, at least as long as manufacturers choose to market those technologies. We will not, however, allow the emissions control technology in the territories to backslide from those available in 2006. If, in the future, manufacturers choose to market only heavy-duty diesel vehicles and engines with 2007 and later emission control technologies, we believe the market will determine when and if the territories will make the investment needed to obtain and distribute the low sulfur diesel fuel necessary to support these technologies.

This exclusion from emission standards does not apply to the new heavy-duty gasoline engine and vehicle emission standards, because low sulfur gasoline that complies with our regulations will be available, and so concerns about damage to engines and emissions control systems will not exist. This exclusion from emission standards also does not apply to light-duty diesel vehicles and trucks because gasoline vehicles and trucks meeting the emission standards and capable of fulfilling the same functions will be available. We believe that the market will determine when and if having access to new light-duty diesel technologies in the territories, in place of or in addition to gasoline technologies, is important enough to obtain and distribute the low sulfur diesel fuel needed to support those technologies.

As we also proposed, we are requiring all heavy-duty diesel motor vehicles and engines for these territories to be certified and labeled to the applicable requirements (either to the 2006 model year standards and associated requirements under the exclusion, or to the standards and associated requirements applicable for the model year of production under the nationwide requirements) and warranted, as otherwise required under the Clean Air Act and EPA regulations. Special recall and warranty considerations due to the use of excluded high sulfur fuel are the same as those for Alaska during its exemption and transition periods (see the discussion in previous section). To protect against this exclusion being used to circumvent the emission requirements applicable to the rest of the United States (*i.e.,* continental United States, Alaska, Hawaii, Puerto Rico and the U.S. Virgin Islands) after 2006 by routing exempted (pre-2007 technology) vehicles and engines through one of these territories, we are restricting the importation of vehicles and engines from these territories into the rest of the United States. After the 2006 model year, diesel vehicles and engines certified under this exclusion to meet the 2006 model year emission standards for sale in American Samoa, Guam and the Commonwealth of the Northern Mariana Islands will not be permitted entry into the rest of the United States.

b. Why Are We Treating These Territories Uniquely?

Unlike the rest of the nation (except Alaska), these territories are currently exempt from the 500 ppm sulfur standard for highway diesel fuel. Section 325 of the CAA provides that upon request of Guam, American Samoa, the Virgin Islands, or the Commonwealth of the Northern Mariana Islands, we may exempt any person or source, or class of persons or sources, in that territory from any requirement of the CAA, with some specific exceptions. The requested exemption could be granted if we determine that compliance with such requirement is not feasible or is unreasonable due to unique geographical, meteorological, or economic factors of the territory, or other local factors as we consider significant.

Prior to the effective date of the current highway diesel sulfur standard of 500 ppm, the territories of American Samoa, Guam and the Commonwealth of Northern Mariana Islands petitioned us for an exemption under section 325 of the CAA from the sulfur requirement under section 211(i) of the CAA and associated regulations at 40 CFR 80.29. The petitions were based on geographical, meteorological, air quality, and economic factors unique to those territories. We subsequently granted the petitions.[181]

These U.S. territories are islands with limited transportation networks. Combined, these three territories have only approximately 1300 registered diesel vehicles. Diesel fuel consumption in these vehicles represents just a tiny fraction of the total diesel fuel volume consumed on these islands; the bulk of diesel fuel is burned in marine, nonroad, and stationary applications. Consequently highway diesel vehicles are believed to have a negligible impact on the air quality in these territories, which, with minor exceptions, is very good.

All three of these territories lack internal petroleum supplies and refining capabilities and rely on long distance imports. Given their remote location from Hawaii and the U.S. mainland, most petroleum products are imported from East rim nations, particularly Singapore. Although Australia, the Philippines, and certain other Asian countries have or will soon require low sulfur diesel fuel, their sulfur limit is 500 ppm, not the new 15 ppm sulfur limit established by today's action for the United States. Compliance with low sulfur (15 ppm) requirements for highway fuel would require construction of separate storage and handling facilities for small quantities of a unique grade of diesel fuel for highway purposes, or use of low sulfur (15 ppm) diesel fuel for all purposes to avoid segregation. Either of these alternatives would require importation of the low sulfur fuel from Hawaii or the U.S. mainland, and would significantly add to the already high cost of diesel fuel in these territories, which rely heavily on United States support for their economies.

G. Refinery Air Permitting

Prior to making diesel desulfurization changes, some refineries may be required to obtain a preconstruction permit, under the New Source Review (NSR) program, from the applicable state/local air pollution control agency.[182] We believe that today's program provides sufficient lead time for refiners to obtain any necessary NSR permits well in advance of the compliance date. Further, refiners will be able to stagger their construction of desulfurization projects, since many

[181] See 57 FR 32010, July 20, 1992 for American Samoa; 57 FR 32010, July 30, 1992 for Guam; and 59 FR 26129, May 19, 1994 for CNMI.

[182] Hydrotreating diesel fuel involves the use of process heaters, which have the potential to emit pollutants associated with combustion, such as NO_X, PM, CO and SO^2. In addition, reconfiguring refinery processes to add desulfurization equipment could increase fugitive VOC emissions. The emissions increases associated with diesel desulfurization will vary widely from refinery to refinery, depending on many source-specific factors, such as crude oil supply, refinery configuration, type of desulfurization technology, amount of diesel fuel produced, and type of fuel used to fire the process heaters.

EXHIBIT J

refineries could take advantage of the temporary compliance option for low sulfur diesel fuel from 2006–2009, as described in Section IV.A. Although some refiners commented that obtaining air permits would be a factor in their ability to comply in the 2006 time frame, state/local agencies commented that they will make the issuance of permits a top priority, because they strongly support achieving the environmental objectives of the low sulfur highway diesel program. State/local agencies further commented that they are committed to working with all affected parties to expedite the processing and issuance of any necessary permits.

For the Tier 2/gasoline sulfur control program promulgated in December 1999, refiners had expressed concerns that permit delays might impede their ability to meet compliance dates. Although we believed that the Tier 2 program provided sufficient lead time for refiners to obtain permits, we committed to undertake several actions to minimize the possibility of any delays for refineries obtaining major NSR permits for gasoline desulfurization projects. These actions include providing federal guidance on emission control technologies[183] and the appropriate use of motor vehicle emission reductions (resulting from the use of low sulfur gasoline), where available, as emission offsets, as well as forming EPA permit teams to assist states in quickly resolving issues, where needed. These three items are discussed in more detail in the Tier 2 final rule (see 65 FR 6773, Feb. 10, 2000).

Given that today's diesel sulfur program provides more than five years of lead time, as well as an additional transitional period, we believe refiners will have ample time to obtain any necessary preconstruction permits. Nevertheless, we believe it is reasonable to continue our efforts under the Tier 2 program, as described above, to help states in facilitating the issuance of permits under the highway diesel sulfur program. For example, the guidance on BACT and LAER control technology that is currently under development for the gasoline sulfur program should have application for diesel desulfurization projects as well. We will plan to reevaluate this guidance to the extent that it may need to be revised or updated for application to highway diesel desulfurization projects. Similarly, we believe the concept of EPA permit teams for gasoline sulfur projects could readily be extended to permits related to diesel projects as well. These teams will track the overall progress of permit issuance and will be available to assist state/local permitting authorities, refineries and the public upon request to resolve site-specific permitting questions. Further, in Tier 2, we announced our plan to issue guidance to help states determine whether and to what extent they may wish to use vehicle emissions reductions as offsets for refineries implementing gasoline desulfurization projects. We are currently in the process of evaluating public comments received on the draft guidance relating to the use of Tier 2 reductions as refinery offsets. Whatever resolution we determine is appropriate for this guidance in the Tier 2 context, we plan to apply a similar approach for diesel desulfurization projects as well. Finally, to facilitate the processing of permits, we encourage refineries to begin discussions with permitting agencies and to submit permit applications as early as possible.

V. Economic Impact

This Section discusses the projected economic impact and cost effectiveness of the emission standards and low-sulfur fuel requirement. Full details of our cost and cost effectiveness analyses can be found in the RIA.

A. Cost for Diesel Vehicles to Meet Emissions Standards

1. Summary of New System and Operating Costs

The technologies described in Section III represent significant technological advancements for controlling emissions, but also make clear that much effort remains to develop and optimize these new technologies for maximum emission-control effectiveness with minimum negative impacts on engine performance, durability, and fuel consumption. On the other hand, it has become clear that manufacturers have a great potential to advance beyond the current state of understanding by identifying aspects of the key technologies that contribute most to hardware or operational costs or other drawbacks and pursuing improvements, simplifications, or alternatives to limit those burdens. To reflect this investment in long-term cost savings potential, the cost analysis includes an estimated $385 million in R&D outlays for heavy-duty engine designs and $220 million in R&D for catalysts systems giving a total R&D outlay for improved emission control of more than $600 million. The cost and technical feasibility analyses accordingly reflect substantial improvements on the current state of technology due to these future developments.

Estimated costs are broken into additional hardware costs and life-cycle operating costs. The incremental hardware costs for new engines are comprised of variable costs (for hardware and assembly time) and fixed costs (for R&D, retooling, and certification). Total operating costs include the estimated incremental cost for low-sulfur diesel fuel, any expected increases in maintenance cost or fuel consumption costs along with any decreases in operating cost expected due to low-sulfur fuel. Cost estimates based on these projected technology packages represent an expected incremental cost of engines in the 2007 model year. Costs in subsequent years will be reduced by several factors, as described below. Separate projected costs were derived for engines used in three service classes of heavy-duty diesel engines. All costs are presented in 1999 dollars.

The costs of these new technologies for meeting the 2007 model year standards are itemized in the RIA and summarized in Table V.A–1. For light heavy-duty vehicles, the cost of an engine is estimated to increase by $1,990 in the early years of the program reducing to $1,170 in later years and operating costs over a full life-cycle to increase by approximately $500 in the near term. For medium heavy-duty vehicles the cost of a new engine is estimated to increase by $2,560 initially decreasing to $1,410 in later years with life-cycle operating costs increasing by approximately $900 in the near term. Similarly, for heavy heavy-duty engines, the vehicle cost in the first year is expected to increase by $3,230 decreasing to $1,870 in later years. Estimated additional life-cycle operating costs for heavy heavy-duty engines in the near term are approximately $3,800. The higher incremental increase in operating costs for the heavy heavy-duty vehicles is due to the larger number of miles driven over their lifetime (714,000 miles on average) and their correspondingly high lifetime fuel usage. Emission reductions are also proportional to VMT and so are significantly higher for heavy heavy-duty vehicles.

We also believe there are factors that will cause cost impacts to decrease over time, making it appropriate to distinguish between near-term and long term costs. Research in the costs of manufacturing has consistently shown that as manufacturers gain experience in production, they are able to apply innovations to simplify machining and

[183] Best Available Control Technology (BACT) and Lowest Achievable Emission Rate (LAER) technology.

EXHIBIT J

assembly operations, use lower cost materials, and reduce the number or complexity of component parts.[184] Our analysis, as described in more detail in the RIA, incorporates the effects of this learning curve by projecting that the variable costs of producing the low-emitting engines decreases by 20 percent starting with the third year of production (2009 model year) and by reducing variable costs again by 20 percent starting with the fifth year of production. Additionally, since fixed costs are assumed to be recovered over a five-year period, these costs are not included in the analysis after the first five model years. Finally, manufacturers are expected to apply ongoing research to make emission controls more effective and to have lower operating cost over time. However, because of the uncertainty involved in forecasting the results of this research, we have conservatively not accounted for it in this analysis. Table V.A–1 lists the projected costs for each category of vehicle in the near-and long-term. For the purposes of this analysis, ''near-term'' costs are those calculated for the 2007 model year and ''long term'' costs are those calculated for 2012 and later model years.

TABLE V.A–1.—PROJECTED INCREMENTAL SYSTEM COST AND LIFE CYCLE OPERATING COST FOR HEAVY-DUTY DIESEL VEHICLES

[net present values in the year of sale, 1999 dollars]

Vehicle class	Model year	Hardware cost	Life-cycle operating cost [a b]
Light	near term	1,990	509
Heavy-duty	long term	1,170	537
Medium	near term	2,560	943
Heavy-duty	long term	1,410	996
Heavy	near term	3,230	3,785
Heavy-duty	long term	1,870	3,979

[a] Incremental life-cycle operating costs include the incremental costs to refine and distribute low sulfur diesel fuel, the service cost of closed crankcase filtration systems, the maintenance cost for PM filters and the lower maintenance costs realized through the use of low sulfur diesel fuel (see discussion in Section V.C).

[b] These costs are for new vehicles only and do not reflect any costs or savings for the existing fleet.

2. New System Costs for NO_X and PM Emission Control

Several new technologies are projected for complying with the 2007 model year emission standards. We are projecting that NO_X adsorbers and catalyzed diesel particulate filters will be the most likely technologies applied by the industry in order to meet the emissions standards. The fact that manufacturers will have several years before implementation of the new standards ensures that the technologies used to comply with the standards will develop significantly before reaching production. This ongoing development could lead to reduced costs in three ways. First, we expect research will lead to enhanced effectiveness for individual technologies, allowing manufacturers to use simpler packages of emission control technologies than we would predict given the current state of development. Similarly, we anticipate that the continuing effort to improve the emission control technologies will include innovations that allow lower-cost production. Finally, we believe that manufacturers will focus research efforts on any drawbacks, such as fuel economy impacts or maintenance costs, in an effort to minimize or overcome any potential negative effects.

We anticipate that in order to meet the standards, industry will introduce a combination of primary technology upgrades for the 2007 model year. Achieving very low NO_X emissions will require continued development of NO_X emission control technologies and improvements in engine management to take advantage of the exhaust emission control system capabilities. The manufacturers are expected to take a systems approach to the problem of optimizing the engine and exhaust emission control system to realize the best overall performance possible. Since most research to date with exhaust emission control technologies has focused on retrofit programs, there remains room for significant improvements by taking such a systems approach. The NO_X adsorber technology in particular is expected to benefit from re-optimization of the engine management system to better match the NO_X adsorbers performance characteristics. The majority of the $600 million dollars we have estimated for research is expected to be spent on developing this synergy between the engine and NO_X exhaust emission control systems. PM control technologies are expected to be less sensitive to engine operating conditions as they have already shown good robustness in retrofit applications with low-sulfur diesel fuel.

The NO_X adsorber system that we are anticipating will be applied in 2007 consists of a catalyst which combines traditional gasoline three-way conversion technology with a newly developed NO_X storage function, a reductant metering system and a means to control exhaust air fuel (A/F) ratio. The NO_X adsorber catalyst itself is a relatively new device, but is benefitting in its development from over 20 years of gasoline three-way catalyst development. In order for it to function properly, a systems approach that includes a reductant metering system and control of exhaust A/F ratio is also necessary. Many of the new air handling and electronic system technologies developed in order to meet the 2004 heavy-duty engine standards can be applied to accomplish the NO_X adsorber control functions as well. Some additional hardware for exhaust NO_X or O_2 sensing, for exhaust partitioning and for fuel metering will likely be required. The RIA also calculates an increase in warranty costs for this additional hardware. In total the new NO_X control technologies required in order to meet the 2007 emission standards are estimated to increase light heavy-duty engine costs by $1,000, medium heavy-duty engine costs by $1,310 and heavy heavy-duty engine costs by $1,650 in the year 2007. In the year 2012 and

[184] See Chapter V of the final Tier 2 Regulatory Impact Analysis, contained in Air Docket A–97–10.

EXHIBIT J

beyond the incremental costs are expected to decrease to $590 for a light heavy-duty engine, $690 for a medium heavy-duty engine and to $930 for a heavy heavy-duty engine.

Catalyzed diesel particulate filters are experiencing widespread retrofit use in much of Europe as low-sulfur diesel fuel becomes readily available. These technologies are proving to be robust in their non-optimized retrofit applications requiring no modification to engine or vehicle control functions. We therefore anticipate that catalyzed diesel particulate filters can be integrated with new diesel engines with only a minimal amount of engine development. We do not anticipate that additional hardware beyond the diesel particulate filter itself and an exhaust pressure sensor for OBD will be required in order to meet the PM standard. However, in order to ensure trap durability under all possible operating conditions, some engine manufacturers may choose to provide backup regeneration technologies for their PM filter based systems. As detailed further in the RIA and the RTC documents, we do not anticipate that these redundant systems will add to variable costs. We estimate in 2007 that diesel particulate filter systems will add $730 to the cost of a light heavy-duty vehicle, $950 to the cost of a medium heavy-duty vehicle and $1,190 to the cost of a heavy heavy-duty vehicle. By 2012 these costs are expected to decrease to $425, $530, and $690 respectively. These cost estimates are comparable to estimates made by the Manufacturers of Emission Controls Association for these technologies.[185]

The hydrocarbon (HC) exhaust standards set in this rulemaking will be challenging for both diesel and gasoline engine technologies. For diesel engines utilizing the NO_X adsorber based technology solution to control NO_X emissions, HC control due to imprecise NO_X regeneration control may be difficult. One way to ensure HC compliance will be to apply a separate diesel oxidation catalyst which can control HC emissions to the limits set here. These diesel oxidation catalysts are expected to add an additional cost to the system of $206 for light heavy-duty vehicles, $261 for medium heavy-duty vehicles, and $338 for heavy heavy-duty vehicles.

We have eliminated the exemption that allowed turbo-charged heavy-duty diesel engines to vent crankcase gases directly to the environment, so called open crankcase systems, and have projected that manufacturers will rely on engineered closed crankcase ventilation systems which filter oil from the blow-by gases. We estimate that the initial cost of these systems in 2007 will be $37, $42, and $49 for light, medium and heavy heavy-duty diesel engines respectively. Additionally we expect a portion of the oil filtration system to be a service replacement oil filter which will be replaced on a 30,000 mile service interval with a service cost of $10, $12, and $15 for light, medium, and heavy heavy-duty diesel engines respectively. These cost are summarized with the other cost for emission controls in Table V.A–1 and are included in the aggregate cost reported in Section V.D.

3. Operating Costs Associated With NO_X and PM Control

The RIA assumes that a variety of new technologies will be introduced to enable heavy-duty vehicles to meet the new emissions standards. Primary among these are advanced emission control technologies and low-sulfur diesel fuel. The many benefits of low-sulfur diesel fuel are described in Section III, and the incremental cost for low-sulfur fuel is described in Section V.C. The new emission control technologies are themselves not expected to introduce additional operating costs in the form of increased fuel consumption. Operating costs are estimated in the RIA over the life of the vehicle and are expressed as a net present value (NPV) in 1999 dollars for comparison purposes.

Total operating cost estimates include both the expected increases in maintenance and fuel costs (both the incremental cost for low-sulfur fuel and any fuel consumption penalty) due to the emission control systems application and the predicted decreases in maintenance cost due to the use of low-sulfur fuel. Our analysis projects some increase in operating costs due to the incremental cost of low-sulfur diesel fuel but no net increase in fuel consumption with the application of the new emission control technologies (see discussion in Section III.G). The net increase in operating costs are summarized in Table V.A–1. While we are using these incremental operating cost estimates for our cost effectiveness calculations, it is almost certain that the manufacturers will improve existing technologies or introduce new technologies in order to offset at least some of the increased operating costs.

We estimate that the low-sulfur diesel fuel required in order to enable these technologies will have an incremental cost of approximately $0.045/gallon in the near term increasing to $0.050/gallon in the long term as discussed in Section V.C. The low-sulfur diesel fuel may also provide additional benefits by reducing the engine maintenance costs associated with corrosion due to sulfur in the current diesel fuel. These benefits, which are discussed further in Section V.C.5 and in the RIA, include extended oil change intervals due to the slower acidification rate of the engine oil with low-sulfur diesel fuel. Service intervals for the EGR system are also expected to increase due to lower-sulfur induced corrosion than will occur with today's higher-sulfur fuel. This lengthening of service intervals provides a significant savings to the end user. As described in more detail in the RIA we anticipate that low-sulfur diesel fuel will provide additional cost savings to the consumer of $153 for light heavy-duty vehicles, $249 for medium heavy-duty vehicles and $610 dollars for heavy heavy-duty vehicles.

The operating costs for replacement filters in the closed crankcase filtration systems expressed as a net present value in the year of sale are estimated to be $31 for light heavy-duty vehicles, $59 for medium heavy-duty vehicles and $218 for heavy heavy-duty vehicles for vehicles sold in 2007.

PM filter based technologies capture all forms of particulate in the exhaust including inorganic solid particles which can come from the engine oil or wear products of the engine. These inorganic particles (often call ash) must be periodically cleaned from the particulate filter. We have estimated the additional maintenance cost to clean the PM filter expressed as a net present value in the year of sale of $55 for light heavy-duty vehicles, $56 for medium heavy-duty vehicles and $208 dollars for heavy heavy-duty vehicles, as detailed in the RIA.

Factoring the cost savings due to low sulfur diesel fuel into the additional cost for low-sulfur diesel fuel and the service cost of the closed crankcase ventilation system and the PM filter system yields an increase in vehicle operating costs expressed as a net present value in the year of sale of $509 for a light heavy-duty vehicle, $943 for a medium heavy-duty vehicle and $3,785 for a heavy heavy-duty vehicle. These life cycle operating costs are also summarized in Table V.A–1. The net increase in operating cost can also be expressed as an average annual operating cost for each class of heavy-duty vehicle by dividing the total undiscounted operating costs by the average vehicle life assumed to be 9 years for light heavy-duty vehicles, and

[185] Letter from Bruce Bertelsen, Manufacturers of Emission Controls Association (MECA) to William Charmley, US EPA, December 17, 1998. The letter documents a MECA member survey of expected diesel particulate filter costs. Air Docket A–98–32 Item II–D–09.

EXHIBIT J

11 years for medium and heavy heavy-duty engines. Expressed as an approximate annual per vehicle cost, the additional operating cost is estimated as $80 for a light heavy-duty vehicle, $130 for a medium heavy-duty vehicle, and $510 for a heavy heavy-duty vehicle.

B. Cost for Gasoline Vehicles to Meet the New Emissions Standards

1. Summary of New System Costs

To perform a cost analysis for the final gasoline standards, we first determined a package of likely technologies that manufacturers could use to meet the standards and then determined the costs of those technologies. In making our estimates, we have relied on our own technology assessment which included publicly available information such as that developed by California, confidential information supplied by individual manufacturers, and the results of our own in-house testing.

In general, we expect that heavy-duty gasoline vehicles would (like Tier 2 light duty vehicles) be able to meet these standards through refinements of current emissions control components and systems rather than through the widespread use of new technology. More specifically, we anticipate a combination of technology upgrades such as the following:

- Improvements to the catalyst system design, structure, and formulation, plus an increase in average catalyst size and loading.
- Air and fuel system modifications including changes such as improved oxygen sensors, and calibration changes including improved precision fuel control and individual cylinder fuel control.
- Exhaust system modifications, possibly including air gapped components, insulation, leak free exhaust systems, and thin wall exhaust pipes.
- Increased use of fully electronic exhaust gas recirculation (EGR).
- Increased use of secondary air injection.
- Use of ignition spark retard on engine start-up to improve upon cold start emission control.
- Use of low permeability materials and minor improvements to designs, such as the use of low-loss connectors, in evaporative emission control systems.

We expect that the technologies needed to meet the heavy-duty gasoline standards will be very similar to those required to meet the Tier 2 standards for vehicles over 8,500 pounds GVWR. Few heavy-duty gasoline vehicles currently rely on technologies such as close coupled catalysts and secondary air injection, but we expect they would to meet the new standards.

For each group we developed estimates of both variable costs (for hardware and assembly time) and fixed costs (for R&D, retooling, and certification). Cost estimates based on the current projected costs for our estimated technology packages represent an expected incremental cost of vehicles in the near-term. For the longer term, we have identified factors that would cause cost impacts to decrease over time. First, since fixed costs are assumed to be recovered over a five-year period, these costs disappear from the analysis after the fifth model year of production. Second, the analysis incorporates the expectation that manufacturers and suppliers would apply ongoing research and manufacturing innovation to making emission controls more effective and less costly over time. Research in the costs of manufacturing has consistently shown that as manufacturers gain experience in production and use, they are able to apply innovations to simplify machining and assembly operations, use lower cost materials, and reduce the number or complexity of component parts.[186] These reductions in production costs are typically associated with every doubling of production volume. Our analysis incorporates the effects of this ''learning curve'' by projecting that a portion of the variable costs of producing the new vehicles decreases by 20 percent starting with the third year of production. We applied the learning curve reduction only once since, with existing technologies, there would be less opportunity for lowering production costs than would be the case with the adoption of new technology. We did not apply the learning curve reduction to precious metal costs, nor did we apply it for the evaporative standards.

We have prepared our cost estimates for meeting the new heavy-duty gasoline standards using a baseline of current technologies for heavy-duty gasoline vehicles and engines. Finally, we have incorporated what we believe to be a conservatively high level of R&D spending at $2,500,000 per engine family where no California counterpart exists. We have included this large R&D effort because calibration and system optimization is likely to be a critical part of the effort to meet the standards. However, we believe that the R&D costs may be generous because the projection probably underestimates the carryover of knowledge from the development required to meet the light-duty Tier 2 and CARB LEV–II standards.

Table V.B–1 provides our estimates of the per vehicle cost for heavy-duty gasoline vehicles and engines. The near-term cost estimates in Table V.B–1 are for the first years that vehicles meeting the standards are sold, prior to cost reductions due to lower productions costs and the retirement of fixed costs. The long-term projections take these cost reductions into account.

TABLE V.B–1.—PROJECTED INCREMENTAL SYSTEM COST AND LIFE CYCLE OPERATING COST FOR HEAVY-DUTY GASOLINE VEHICLES

[Net Present Values in the year of sale, 1999 dollars]

Vehicle class	Model year	Incremental system cost	Life-cycle operating cost
Heavy-Duty Gasoline	near term	$198	$0
	long term	167	0

[186] See Chapter V of the final Tier 2 Regulatory Impact Analysis, contained in Air Docket A–97–10.

EXHIBIT J

2. Operating Costs Associated With Meeting the Heavy-Duty Gasoline Standard

Low sulfur gasoline is a fundamental enabling technology which will allow heavy-duty gasoline vehicles to meet the very low emission standards being finalized today. The low sulfur gasoline required under the Tier 2 proposal will enable advanced exhaust emission control for heavy-duty vehicles as well. Today's final rule puts no additional requirements on gasoline sulfur levels and as such should not increase gasoline fuel costs. Additionally, the new technologies being employed in order to meet the new standards are not expected to increase fuel consumption for heavy-duty gasoline vehicles. In fact, there may be some small improvement in fuel economy from the application of improved fuel and air control systems on these engines. Therefore, in the absence of changes to gasoline specifications and with no decrease in fuel economy, we do not expect any increase in vehicle operating costs.

C. Cost of Fuel Change

We estimate that the overall net cost associated with producing and distributing 15 ppm diesel fuel, when those costs are allocated to all gallons of highway diesel fuel, will be approximately 5.0 cents per gallon in the long term, or an annual cost of roughly $2.2 billion per year once the program is fully effective starting June 1, 2010. During the initial years under temporary compliance option, the overall net cost is projected to be 4.5 cents per gallon, or an annual cost of roughly $1.7 billion per year.

This cost consists of a number of components associated with refining and distributing the new fuel. The majority of the cost is related to refining. From 2006–2010, refining costs are estimated to be approximately 3.3 cents per gallon of highway diesel fuel (4.1 cents per gallon for that portion produced to the 15 ppm standard), increasing to 4.3 cents per gallon once the program is fully in place. In annual terms, the 2006–2010 refining costs are expected to be about $1.4 billion per year, increasing to about $1.8 billion in 2011. These figures include the cost of producing slightly more volume of diesel fuel because: (1) Desulfurization decreases the energy density of the fuel and (2) slightly more highway diesel fuel is expected to be downgraded to nonroad diesel fuel in the distribution system.

A small cost of 0.2 cents per gallon is associated with an anticipated increase in the use of additives to maintain fuel lubricity. Also, distribution costs are projected to increase by 1.0 cents per gallon during the initial years under the temporary compliance option, including the cost of distributing slightly greater volumes of fuel. Together, these two cost components only amount to about $0.5 billion per year beginning in 2006. These costs drop to only about $0.3 billion in 2011.

As discussed in Sections V.A. and V.C.5, operation with 15 ppm sulfur diesel fuel is expected to reduce average vehicle maintenance costs by approximately 1 cent on a per gallon basis. Beginning in 2011, this reduction in maintenance costs will total roughly $400 million per year. All of these cost estimates are discussed in more detail below and in the RIA.

1. Refinery Costs

As explained in Section IV, EPA believes that refiners will meet the 15 ppm sulfur standard through an extension of the same hydrotreating technology which is used today to meet the current 500 ppm sulfur standard. Meeting the new standard will generally require refiners to install additional hydrotreating equipment. Most refiners are expected to add another hydrotreating reactor and other related equipment to their existing desulfurization unit. However, we project that some refiners, roughly 20 percent, will conclude that it is not economical to add onto their existing unit and will instead build an entirely new hydrotreater.

Consistent with our analysis for the NPRM, we estimate that a refinery's diesel fuel will have to average 7 ppm in order to consistently meet the 15 ppm standard. For the NPRM, we estimated the cost of producing highway diesel fuel with a 7 ppm average sulfur level for the average U.S. refinery. We received a number of comments on the NPRM which indicated that the cost for various refiners would differ dramatically, as would the cost of treating the various blendstocks which comprise highway diesel fuel. In response, we extended our refining cost model to be specific to each refinery in the U.S., based on a refinery's production volume and estimated composition of its highway diesel fuel. Using this model, we estimated each refinery's cost of producing 7 ppm sulfur highway diesel fuel and then aggregated these results to estimate a national average cost.

This analysis considers the fact that some diesel fuel blendstocks are more difficult to desulfurize than others. As indicated in some comments on the NPRM, this could lead refiners to shift their blendstocks between highway diesel fuel and other distillate products in order to minimize costs. For example, our analysis found that the incremental cost of desulfurizing current highway diesel fuel can be more expensive for some refiners than the cost to other refiners of desulfurizing nonroad diesel fuel to meet the 15 ppm standard, despite the fact that the current sulfur level of nonroad diesel fuel is roughly 2500–3000 ppm.

We evaluated costs under two scenarios: (1) all current producers of highway diesel fuel continued to do so, and (2) some refiners increase production of highway diesel fuel and some refiners facing higher desulfurization costs leave the highway diesel fuel market. Our cost projections presented below are based on the first scenario. This is conservative, because in this scenario, some refineries currently produce relatively low volumes of highway diesel fuel and would face relatively high costs per gallon to desulfurize this same volume of fuel.

We project that the average refining cost to meet the 15 ppm cap standard will be 4.3 cents per gallon, including capital costs amortized at 7 percent per year before taxes, once the standard is fully in place in June, 2010. Refining costs will be lower, 4.1 cents per gallon of 15 ppm fuel (or 3.3 cents per gallon of all highway diesel fuel), during optional compliance provisions (2006–2010), because we expect that those refiners facing the lowest cost of meeting the standard in each PADD will invest to produce the new fuel. We project that refiners will invest $3.8 billion in new equipment in order for about 80 percent of highway diesel fuel to meet the 15 ppm standard in 2006. An additional $1.4 billion will be invested for the rest of the highway diesel fuel market to meet the new standard in 2010, for a total capital cost of $5.2 billion. The average refinery is projected to spend about $43 million in capital costs, and $7 million per year in operating costs.

Table V.C–1 shows the range of average costs per refinery by PADD. Despite the varying size of refineries and differences in their available distillate blendstocks, the variations in the average cost between PADDs in either 2006 or 2010 are small, with the exception of PADD 4. PADD 4 average costs are 30–40 percent higher than the costs in the other PADDs.

EXHIBIT J

TABLE V.C–1.—AVERAGE REFINING COSTS BY PADD (CENTS PER GALLON OF 15 PPM FUEL)

	2006	2010
PADD 1	4.4	4.7
PADD 2	4.3	4.5
PADD 3	3.8	3.9
PADD 4	5.1	5.3
PADD 5	4.2	4.5
U.S. Average	4.1	4.3

A number of other estimates of the cost of the 15 ppm sulfur standard were submitted as part of the comments. Mathpro used a notional refinery model to estimate the national average costs of the proposed standard for EMA. Charles River Associates (CRA), along with Baker and O'Brien, used the Prism refinery model to estimate the cost for each refinery in the U.S. for API. Finally, EnSys used the Oak Ridge National Laboratory PADD 3 refinery model to estimate costs for DOE. Table V.C–2 summarizes these estimates after adjusting the projected costs to represent a 7 percent rate of return on investment before taxes (except for the CRA cost, which could not be adjusted).

TABLE V.C–2.—COMPARISON OF NATIONAL AVERAGE REFINING COST ESTIMATES

[7 percent rate of return on investment before taxes]

	Average cost (cents per gallon of 15 ppm fuel)	Capital cost ($ billion)
EPA (Full program)	4.4	5.3
Methpro for EMA*	4.2–6.1	3.4–6.1
CRA for API (10% after tax rate of return)	6.2	—
EnSys for DOE (conservative technology)* †	5.1–6.0	3.9–6.5
EnSys for DOE (optimistic technology)* †	4.2–4.4	2.7–4.5

* Lower end of range assumes 100 percent revamped equipment; upper end assumes all new equipment.

† Costs are only for the Gulf Coast refining region, which have slightly lower per-gallon costs than the entire U.S., and about half the capital costs.

The costs estimated by Mathpro are the most similar to those estimated by EPA. This is primarily because the desulfurization technology projected to be used were similar in the two studies.

CRA projected the use of similar technology, but estimated that 40 percent of refiners would build new desulfurization units, versus our estimate of 20 percent. CRA also assumed that technology vendors are inherently optimistic in their projections and increased their projected costs by roughly 20 percent. CRA also projected that nonroad diesel fuel sulfur levels would be capped at 500 ppm. How this affected the projected cost of producing 15 ppm fuel is not clear. CRA assumed that this 500 ppm fuel would be produced by blending 8 ppm sulfur highway diesel fuel and 3000 ppm heating oil. Much of this production was assumed to occur due to mixing in the distribution system. An unknown amount of 500 ppm fuel was produced at refineries. Desulfurization costs are not linear, as shown by CRA's own study. Thus, any blending of 15 ppm sulfur highway diesel fuel with non-desulfurized heating oil at refineries was much more costly than simply hydrotreating nonroad diesel fuel to 500 ppm. It also required refiners to hydrotreat the most difficult blendstocks at a much higher cost. Because of these significant differences in both methodology and assumptions, it is not surprising that CRA's costs would be higher than those estimated by Mathpro or ourselves.

EnSys's cost estimates require some explanation due to the number of scenarios they analyzed. EnSys did not estimate how many refiners would build new desulfurization units and how many would modify their current hydrotreaters, but simply presented costs if refiners took one approach or the other. Thus, the lower limits of the ranges shown in Table V.C–2 assume refiners modify their current hydrotreaters, while the upper limits assume that refiners would build new units. EnSys also projected costs for two separate sets of technologies. One set was considered conservative and relied on technologies that are already in commercial use. The other was considered to be optimistic and was similar to that projected to be used by EPA, Mathpro and CRA. EnSys' costs using the conservative technology are higher than our estimates. This is due to the fact that this technology involves greater capital investment and greater consumption of hydrogen. These greater costs are due to the fact that this technology is not just designed to reduce sulfur, but to reduce aromatic content, increase cetane levels and perform some cracking. EnSys' costs using the optimistic technology are much more similar to those of EPA and Mathpro, considering that EnSys' range of costs reflects both revamped and new desulfurization units and that EPA's costs are dominated (80 percent) by revamped units.

Some of the variation in the costs projected by the various studies involves uncertainty in exactly what degree of hydrotreating will be necessary to meet the 15 ppm sulfur standard day in and day out with a variety of distillate feedstocks. As discussed in Section IV above, there is currently no commercial experience in the U.S. and only a limited amount of information in the public literature on the costs associated with reducing the sulfur level in diesel fuel to very low levels on an ongoing operational basis. Thus, any cost projections involve a significant amount of uncertainty.

2. Highway Diesel Fuel Supply

While API and many refiners did not question the feasibility of the 15 ppm standard, they did indicate that the cost would be higher than that projected by EPA. API believes that those refiners facing higher than average costs may decide to leave the highway diesel fuel market. They argue this is especially a possibility if they are faced with a sulfur standard below a 30 ppm average (or 50 ppm cap), which they believe will require very large investments for high pressure hydrotreating to maintain current highway diesel production volumes. API also believes that many refiners may reduce their production of highway diesel fuel, by switching the feedstocks (i.e., LCO) which are most difficult to desulfurize to other markets,

EXHIBIT J

thus avoiding the higher investments associated with high pressure hydrotreating. If some refiners reduce highway diesel fuel production, that could present an opportunity for other refiners, who choose to make the investment, of higher prices for the new 15 ppm sulfur product.

This view is embodied by a study by Charles River Associates (CRA) and Baker and O'Brien which was commissioned by API. CRA polled refiners concerning their plans under a 15 ppm sulfur cap. Using the results of this survey, as well as other information, CRA projected refiners' costs of meeting the 15 ppm standard, as well as their likely production volumes. CRA concluded that U.S. refiners would likely reduce their highway diesel fuel production by an average of 12 percent, creating significant shortages and price spikes.

CRA's conclusions appear to have been strongly affected by their assumptions, as well as the refiner survey they conducted. For example, CRA assumed that the new sulfur standard would cause 10 percent more highway diesel fuel to be ''lost'' in the distribution system compared to today (i.e., downgraded to off-highway diesel fuel). We believe based on the analysis outlined in the RIA that 2.2 percent is a more accurate estimate, resulting in 9 percent more 15 ppm fuel being available than CRA estimated. This difference alone accounts for 75 percent of the potential national supply shortfall projected by CRA.

CRA also concluded, with little explanation, that 20 refineries producing highway diesel fuel today would not produce highway diesel fuel under the 15 ppm standard and that many more would reduce production. Given the lack of information provided in the study, it was not possible to evaluate CRA's criteria in selecting these 20 refineries, nor was it possible to determine how much of the shortfall was attributable to this conclusion. While CRA evaluated whether refiners currently producing highway diesel fuel would be likely to leave the market, they did not assess whether any refineries currently not producing highway diesel fuel might enter the market. EPA did conduct such an assessment. We found 2 refineries that produce essentially no highway diesel fuel today which could meet the new standard for less than 5 cents per gallon. Production from these refineries would increase highway diesel fuel production by 9 percent. We also found based on our assessment that 4 other refineries could produce highway diesel fuel from their off-highway diesel fuel blendstocks for less than 5 cents per gallon. Production from these 6 refineries would increase highway diesel fuel production by 7 percent. Together with a more reasonable estimate of downgrades in the distribution system, this would more than compensate for any potential lost production, even as estimated by CRA.

CRA also implicitly assumed that the material it projected could be removed from the highway diesel market could be sold at a reasonable price. However, CRA did not analyze the impact of this additional supply on the prices which could be obtained in these markets, or even if these alternative markets could physically absorb all of this material. Much of this material is not diesel fuel, but poor quality blendstock. It is not clear that such material could be blended into non-highway diesel fuel and CRA did not analyze this likely problem. Our analyses, supported by a study by Muse, Stancil and Co., indicate that any substantial quantities of highway diesel fuel diverted to other markets will depress prices in those markets substantially.[187] Hydrotreating diesel fuel to meet the 15 ppm standard avoids these depressed prices, reducing the net cost of meeting the new standard. Since CRA only considered the cost to desulfurize highway diesel fuel, and ignored the added cost of dumping this fuel into markets with depressed prices, CRA's conclusions must be considered to be seriously flawed in this regard.

Furthermore, CRA ignored the fact that roughly 15 percent of today's highway diesel fuel is consumed in engines and furnaces not requiring this fuel. Any shortage of highway diesel fuel would lead many of these non-essential users to switch to nonroad diesel fuel or heating oil. Only limitations in the fuel distribution system would cause these users to continue to burn highway diesel fuel.

These problems with CRA's analysis, plus the lack of detail available concerning the specifics of the study, lead us to reject the study's conclusions that there will be significant supply shortfalls under a 15 ppm sulfur standard.

Finally, if any potential for highway diesel fuel shortfalls exists by requiring all fuel to meet 15 ppm sulfur in 2006, as CRA's analysis suggests, we believe that allowing some continued supply of 500 ppm, as we are doing under the temporary compliance option and hardship provisions contained in today's action, addresses this concern. Since the final rule allows some transition period before the entire highway diesel pool is required to meet the 15 ppm sulfur standard, some refiners will not need to change their current operations and will be able to continue producing 500 ppm fuel during these years. Those refiners that delay production of low sulfur diesel fuel until the later years of the program will tend to be the refiners with the highest cost to comply and, thus, refiners that would otherwise have the greatest tendency not to invest and thereby impact supply. Refiners that begin producing low sulfur diesel fuel in the later years of the program will also be able to take advantage of ongoing improvements in desulfurization technology. Together, these factors will help avoid or reduce any potential losses in highway diesel fuel production when the program requires full compliance with low sulfur diesel fuel.

As mentioned above, EPA agrees that some refiners will face higher desulfurization costs than others. This is generally the case with any fuel quality regulation, since the crude oils processed by, as well as the configurations and product slates of individual refineries vary dramatically. As mentioned above and summarized in the RIA, we used our refining cost model to assess the likelihood that refiners would leave the highway diesel fuel market or reduce their production of highway diesel fuel. We also assessed the likelihood of other refiners entering this market. We found that a number of refiners appear to be in a position to expand their highway diesel fuel production capacity very economically relative to other refiners facing higher desulfurization costs. We also found that up to 2 refineries not now producing highway diesel fuel could easily enter the highway diesel fuel market at very competitive costs.

Some refiners may have an alternative market for their diesel fuel. In the extreme, a refiner would likely prefer to only shift his light cycle oil to other distillate products, like nonroad diesel fuel and No. 2 heating oil, retaining his other blendstocks in the higher value highway diesel fuel market. However, in many cases, a refiner cannot shift light cycle oil directly to a distillate product, because the resulting non-highway fuel would no longer meet applicable specifications, such as sulfur or cetane. In most cases, we expect that the refiner must shift highway diesel fuel to alternative markets in order to be able to obtain a reasonable price.

As mentioned above, Muse, Stancil, & Co. analyzed the ability of refiners to

[187] ''Alternate Markets for Highway Diesel Fuel Components,'' Muse, Stancil & Co., for Southwest Research Institute, for U.S. EPA, September, 2000.

EXHIBIT J

divert highway diesel fuel or its blendstocks to other distillate markets. Muse, Stancil found that this ability varied significantly by PADD. In PADDs II and IV, it would be difficult for refiners to move any appreciable quantity of highway diesel fuel to other markets. For example, compared to the value of highway diesel fuel today, the achievable value for the diverted material would decrease by 14 to 20 cents per gallon if refiners tried to move more than 5 percent of their highway diesel fuel to other markets. The loss in value was highest in these two PADDs, because growth in nonroad diesel fuel consumption is small or negative, the ability to reduce the consumption of highway diesel fuel by users other than highway vehicles was limited, and exports are only available through the Gulf or West Coasts with a large transportation cost of getting the material there.

In PADDs III and V, the loss of value was lower, at 4.5–5 cents per gallon and was the lowest in PADD I, 2 cents per gallon. This was primarily because of the ability to export high sulfur diesel fuel overseas. Generally, these losses in value apply if diesel fuel was being diverted to other distillate markets. If light cycle oil was being diverted, the value would drop an additional 3–3.5 cents per gallon.

At lower levels of diversion (e.g., 5 percent or less), the loss in value was much less, ranging from 1.6–5 cents per gallon across the five PADDs. However, the primary reason for this was the reduced use of highway diesel fuel by users other than highway vehicles, who do not require this fuel. Muse believed that such conversions were limited, but real and could represent roughly a third of the current use of highway diesel fuel in other than highway vehicles. If this occurs, then demand for highway diesel fuel drops at the same time. Thus, in this case, the total refining costs associated with the new sulfur standard will decline because the total amount of fuel; needing to be desulfurized will decrease.

The only area where refiners could easily divert substantial amounts of highway diesel fuel is PADD I. PADD I refiners currently produce a relatively low amount of highway diesel fuel and substantial amounts of high sulfur diesel fuel/heating oil are imported. Thus, refiners in PADD I facing relatively high costs of meeting the 15 ppm standard could shift some or all of their highway diesel fuel to other markets, reducing imports and not substantially affecting prices in this market.

In the end, refiners will make their decisions regarding investment based on their projections of demand of 15 and 500 ppm diesel fuel, the prices of these fuels and the prices available in alternative markets. At this time, we do not project that the specifics involved in this case (technology, cost, alternative markets) are significantly different from those which have existed in the past. The last time EPA regulated diesel fuel, the refining industry actually overbuilt desulfurization capacity for the current 500 ppm standard, as evidenced by the significant use in the nonroad market of diesel fuel produced to the current highway diesel sulfur standard of 500 ppm and the relatively low price of highway diesel fuel relative to nonroad diesel fuel. Some of this overproduction may have been due to limitations in the distribution system to distribute both highway and nonroad grades of diesel fuel. However, the refinery system as a whole was able to supply both highway diesel vehicles, plus the use of highway diesel fuel by other users. This was accomplished despite the fact that a number of small refiners did decide to switch from the highway diesel fuel market to the nonroad diesel fuel market, presumably for economic reasons.

3. Cost of Lubricity Additives

As discussed in Section IV, the refinery processes needed to achieve the sulfur standard have some potential to degrade the natural lubricity characteristics of the fuel. Consequently, an increase in the use of lubricity additives for diesel fuel may be anticipated over the amounts used today. As described in more detail in the Regulatory Impact Analysis in the Public Docket, we include in our fuel cost estimate an average cost of 0.2 cents per gallon for lubricity additives over the entire pool of low sulfur highway diesel fuel (the same cost estimate as used in the proposal). This estimate is comparable to an estimate made by Mathpro in a study sponsored by the Engine Manufacturers Association, and is consistent with the cost estimate submitted by Cummins in its comments.

Prior to the proposal, we contacted various producers of lubricity additives to get their estimates of what costs might be incurred for this increase in the use of lubricity additives. The cost estimates varied from 0.1 to 0.5 cents per gallon. The cost is likely to be a strong function of not only the additive type, but also the assumed treatment rate and the volume of fuel that needs to be treated, both of which will be, to some extent, a function of the sulfur cap. We requested comment on our cost estimate, including whether there may be unique costs for the military to maintain the lubricity of their distillate fuels. We requested that comments addressing this issue include a detailed discussion of the volumes of fuel affected, current lubricity additive use, and the additional measures that might be needed (and associated costs) to maintain the appropriate level of fuel lubricity. In response to the proposal, we received few comments on the cost of lubricity additives, and none on the volumes of fuel affected, current lubricity additive use, or additional measures that might be needed to maintain the appropriate level of lubricity. In considering the comments, we have found no basis in today's action to use a different average cost estimate to treat low sulfur diesel for lubricity than that which was used in the proposal (0.2 cents per gallon). See more discussion in the Response to Comments Document in the Public Docket.

4. Distribution Costs

We estimate that as a result of today's rule, distribution costs will increase by 0.5 cents per gallon of highway diesel fuel supplied when the sulfur requirements are fully implemented beginning in the year 2010. During the initial years (2006 through May 31, 2010) we estimate that the increase in distribution costs will be 0.4 cents per gallon of highway diesel fuel supplied, with an additional 0.7 cents per gallon equivalent related to capital costs for additional storage tanks to handle two grades of highway diesel fuel.[188]

In the proposal, we estimated that distribution costs would increase by 0.2 cents per gallon if the proposed requirement that the entire highway diesel fuel pool meet a 15 ppm sulfur cap beginning in 2006 be adopted. This cost was comprised of roughly 0.1 cents per gallon due to an increase in pipeline interface and testing costs, and 0.1 cents per gallon for distributing the additional volume of highway diesel fuel needed due to an anticipated decrease in fuel energy density as a side effect of reducing the sulfur content to the proposed 15 ppm cap. The case evaluated in the NPRM is most similar to that for the fully implemented sulfur program in this final rule.

We took advantage of additional information contained in the comments to the NPRM in formulating a more comprehensive estimate of the

[188] This cost is expressed in terms of the total volume of highway diesel fuel supplied, including the fuel which meets the 15 ppm sulfur cap and that which meets the 500 ppm sulfur cap.

EXHIBIT J

distribution costs under today's rule. In some cases this involved adjusting an estimate for a parameter that factored into our calculation of costs in the NPRM. One important example is that we increased our estimate of the additional volume of highway diesel shipped by pipeline that would need to be downgraded to a lower-value product. This product downgrade is necessitated by mixing that takes place between products that abut each other while in the pipeline. The mixture is referred to as interface when it can be blended into another product and transmix when it must be returned to the refinery for reprocessing. In other cases, our reevaluation of distribution costs included the consideration of parameters that did not factor into the estimation of distribution costs in the proposed rule. For example, commenters to the NPRM brought to our attention that there would be additional costs associated with needed changes in the handling practices for interface volumes which result from shipments of jet fuel and highway diesel fuel that abut each other in the pipeline.

There are a number of common factors in the estimation of distribution costs during the initial period and after the sulfur requirements are fully implemented, such as the increase in interface volumes for pipeline shipments of highway diesel fuel. However, there are other factors that are unique to the estimation of costs during the initial years as well. For example, with two grades of highway diesel fuel in the distribution system at the same time there are costs associated with the need for additional storage tanks at some petroleum terminals and refineries. Our estimation of distribution costs under these two periods is discussed separately in the following sections. Where there is a commonality, the issue is discussed under the section on distribution costs for the fully implemented program.

a. Distribution Costs Under the Fully Implemented Program

Based on the considerations discussed below, we estimate that the increase in distribution costs under the fully implemented sulfur program will be 0.5 cents per gallon of highway diesel fuel supplied.

The cost of distributing the additional volume of highway diesel fuel needed to compensate for the lower energy density of highway diesel fuel that meets a 15 ppm sulfur cap is estimated at 0.17 cents per gallon of highway diesel fuel supplied. As in the NPRM, the cost of producing this additional volume was included in the calculation of refinery costs (see Section V.C.1.). In the NPRM, we estimated that the cost of distributing highway diesel fuel was equal to the difference in price at the refinery rack and the retail price. For today's final rule, we based our estimate of distribution cost on a PADD by PADD evaluation of the difference in the price of highway diesel fuel at the refiner rack versus the retail price. The price differential for each PADD was weighted by the additional volume of fuel we anticipate will need to be produced in each PADD to arrive at an estimate of distributing the additional volume needed for the nation as a whole. We believe this approach provides a more accurate estimate of costs.

Based on additional information provided in the comments on the changes in pipeline interface practices that would result from today's rule, we adjusted our estimate of the increased volume of highway diesel fuel that would be downgraded to a lower-value product from 1.5 percent to 2.2 percent of highway diesel fuel supplied (see the RIA to this rule). As in the NPRM, the cost of producing this additional volume was included in the calculation of refinery costs (see Section V.C.1.). The cost of downgrading the increased volume of highway diesel fuel to a lower-value product is based on the difference in the cost of 15 ppm sulfur diesel fuel and the product to which the interface is downgraded. Under the fully imlemented program, this downgrade would be made into the nonroad diesel pool. The cost of this increased volume of downgrade is estimated at approximately 0.14 cents per gallon of highway diesel supplied.

We identified that there would also be an increase in the economic impact for the existing volume of interface currently associated with pipeline shipments of highway diesel fuel. This is because the cost of downgrading the existing interface volume would be determined by the difference between the cost of 15 ppm sulfur fuel and nonroad diesel fuel rather than the difference in cost between current 500 ppm diesel fuel and nonroad diesel fuel as it is today. We estimate that the increase in the cost of downgrading the existing highway diesel interface would be 0.09 cents per gallon of highway diesel fuel supplied.

We anticipate that there may be minor costs in addition to those discussed above associated with optimizing the distribution system to adequately limit sulfur contamination. These costs could result from various minor changes to distribution practices and or hardware discovered to be needed by industry while preparing to comply with today's rule. While it is not possible to specifically identify the nature of these changes, they could include the occasional replacement of a leaking valve or improvements in communication practices to facilitate batch changes in the pipeline system. There may also be some cost associated with the process that we anticipate the distribution industry will undertake to evaluate its readiness to comply with the requirements in today's rule. Such costs might result from testing to determine the level of contamination introduced through the use of various distribution hardware or practices. It is not possible to specifically identify the costs that might be associated with this optimization process. However, given the limited nature of the changes that might be needed and that the need for such changes would not be widespread, we believe that the associated costs would not pose a substantial burden. We estimate that the miscellaneous costs associated with optimizing the distribution system to limit sulfur contamination would be 0.025 cents per gallon of highway diesel fuel supplied (on average) during the period from when the sulfur program is fully implemented (2010) through the year 2020. These costs were amortized at a rate of 7% over the period of 2006 through 2020. The per gallon cost is somewhat higher during the initial years.

Commenters to the proposed rule stated that it is current practice for all of the interface generated when highway diesel fuel abuts jet fuel in the pipeline to be cut into highway diesel fuel. They pointed out that this practice would no longer be possible when all highway diesel fuel is required to meet a 15 ppm sulfur cap because of the relatively high sulfur content of jet fuel (as high as 3000 ppm).[189] They stated that the mixture of highway diesel fuel meeting a 15 ppm sulfur cap and jet fuel would need to be returned from the terminal to the refinery for reprocessing, at high cost (*i.e.* would need to be treated as transmix). While we agree that handling procedures for this mixture will need to change, we believe that it will not be necessary to treat it as transmix. We believe that there will be opportunity for the mixture to be sold from the terminal into the nonroad diesel pool. This will increase the cost associated with downgrading this mixture.

[189] During the initial years of the sulfur program, the current practice used to handle the interface between shipments of jet fuel and highway diesel fuel can be used for that portion of the highway diesel fuel that continues to meet a 500 ppm sulfur cap.

EXHIBIT J

Expressed in terms of the volume of highway diesel fuel supplied, we estimate this cost at 0.07 cents per gallon. Additional storage tanks will be needed to handle the mixture at those terminals that currently do not handle nonroad diesel fuel. The cost of these tanks has been fully accounted for in the calculation of costs during the initial years of the program.

The additional quality control testing at the terminal level needed to ensure compliance with the 15 ppm sulfur cap would be the same during the initial years as after the requirements are fully implemented. We estimate that the cost of this additional testing would be as we projected in the proposal, 0.002 cent per gallon of highway diesel supplied (see the RIA to this rule).

We believe that there will not be a significant increase in the volume of highway diesel fuel discovered to exceed the sulfur standard downstream of the refinery as a result of today's rule. We believe this will be the case both during the initial years and after the sulfur requirements are fully implemented. We anticipate that distributors will quickly optimize their practices to avoid sulfur contamination. We also anticipate that distributors will gain some experience in reducing sulfur contamination in the distribution system through complying with the recently finalized Tier 2 low sulfur gasoline requirements (65 FR 6698, February 10, 2000). While outside the scope of this final rule, it is worth pointing out that potential difficulties in distributing 15 ppm diesel fuel would be lessened if the sulfur content of nonroad diesel fuel is reduced by a future rulemaking (as discussed in Section 8). We anticipate that the batches of highway diesel fuel that are discovered to exceed the 15 ppm sulfur cap will be coped with as follows:

—When possible, by blending highway diesel fuel that is below the 15 ppm cap with the out-of-specification batch to bring the resulting mixture into compliance. This practice will be more difficult than it is currently because the amount of fuel needed to blend the out-of-specification batch into compliance may increase. However, we expect it to continue to be the method of choice for handling out-of-specification highway diesel whenever possible.

—By downgrading the batch either to nonroad diesel fuel or to 500 ppm highway diesel during the initial years.

—By reprocessing the batch to meet the 15 ppm cap, but only in those infrequent instances where the previous options do not exist.

We do not believe that the cost of handling out-of specification highway diesel batches will increase significantly as a result of today's action.

Tank truck, tank wagon, and barge operators may need to more carefully and consistently observe current industry practices to limit contamination in some situations. However, these situations are more the exception than the rule and are of a limited nature. Consequently, we believe that this can be accomplished at an insignificant cost. Additional considerations exist for distributors during the initial years as discussed in the following section.

Please refer to the Response to Comments Document for an evaluation of the comments received on the increase in fuel distribution costs associated with today's rule, and to the RIA for a detailed discussion of the way in which we derived the our cost estimates.

b. Distribution Costs During the Initial Years

The factors that cause distribution costs to differ during the initial years include:

—Having a lesser volume of 15 ppm diesel fuel in the system reduces the costs associated with distributing 15 ppm fuel.

—Having an additional grade of highway diesel fuel in the system (500 ppm) creates additional pipeline interface volumes, and additional product downgrade costs.

—The need for additional equipment to handle an additional grade leads to additional costs that must be accounted for during the initial years.

—Having 500 ppm highway diesel fuel in the system allows some opportunity for the pipeline interface volumes associated with the shipment of 15 ppm fuel and jet fuel to be downgraded to 500 ppm diesel fuel rather than nonroad diesel fuel. This will reduce the cost associated with downgrading the subject interface volumes.

In calculating the distribution costs for the initial years of the program, we estimated that 60 percent of the 15 ppm highway diesel fuel shipped by pipeline will be carried in pipelines that choose not to carry 500 ppm diesel fuel. We estimated that the remaining 40 percent of 15 ppm highway diesel fuel shipped by pipeline would be carried in pipelines that carry 500 ppm as well as nonroad diesel fuel. For the sake of simplicity and to allow a comparison with distribution costs when the program is fully implemented, the distribution costs during the initial years as discussed below are expressed in terms of the total volume of highway diesel fuel supplied. This includes 500 ppm as well as 15 ppm highway diesel fuel.

For the reasons outlined above, the following costs, which are also present under the fully implemented sulfur program, were adjusted to reflect the unique conditions during the initial years. During the initial years, the cost of distributing the additional volume of highway diesel fuel needed to compensate for lower energy density of 15 ppm sulfur fuel is estimated at 0.14 cents per gallon of highway diesel fuel supplied. The cost of the increased volume of highway diesel fuel that must be downgraded to a lower-value product is estimated at 0.1 cents per gallon of highway diesel supplied. We estimate that during the initial years of the program the increase in the cost of downgrading the existing highway diesel interface would be 0.08 cents per gallon of highway diesel fuel supplied. During the initial years, the cost of downgrading the interface between pipeline shipments of jet fuel and highway diesel fuel is estimated to increase by 0.03 cents per gallon of highway diesel fuel supplied. The cost of the additional tanks required at terminals to handle this interface is estimated at 0.009 cents per gallon of highway diesel fuel supplied. This tank cost was amortized over the period of the four-year transition period. We estimate that the miscellaneous costs associated with optimizing the distribution system to limit sulfur contamination would be 0.027 cents per gallon of highway diesel fuel supplied (on average) during the initial period (2006—2010).

As noted in the previous section, the additional quality control testing at the terminal level needed to ensure compliance with the 15 ppm sulfur cap would be the same during the initial years and after the requirements are fully implemented. We estimate that the cost of this additional testing would be as we projected in the proposal, 0.002 cent per gallon of highway diesel supplied.

The cost during the initial years of downgrading the additional interface volumes associated with having two grades of highway diesel fuel in part of the pipeline system is estimated at 0.004 cents per gallon of highway diesel full supplied

The most substantial costs associated with the provisions during the initial years of the program are due to the need to handle an additional grade of highway diesel fuel in the distribution

EXHIBIT J

system. Under the final program, the production of 500 ppm sulfur fuel will be much less than that of 15 ppm fuel. At the same time, most of the diesel vehicle fleet can burn 500 ppm fuel during the initial period. Because of its greater volume and the need to distribute it everywhere in the country, we expect that essentially all pipelines and terminals will handle 15 ppm fuel. In contrast, distribution of 500 ppm fuel will concentrate on those areas nearest the refineries producing that fuel, plus a few major pipelines serving major refining areas.

Regarding distribution to the final user, we expect that nearly all truck stops in areas where 500 ppm fuel is available will invest in piping and tankage to handle a second fuel. Because of the significant expense involved in adding a second tank, in these areas, we expect service stations will only carry one fuel or the other, as market demands dictate. Likewise, we expect that centrally fueled fleets and card locks will only handle 15 ppm fuel. Under this scenario, sales of 500 ppm fuel are limited to only those vehicles which refuel at truck stops and service stations. This is somewhat conservative since some centrally fueled fleets may have the flexibility to inexpensively handle two fuels. Likewise, some card locks in a given area may be able to carry 15 ppm fuel and others 500 ppm fuel and still serve their clients at little extra cost. Still, given the above assumptions, we project that the 500 ppm fuel will have to be distributed to areas representing about 50 percent of the national diesel fuel demand. Also, as the fleet turns over to 2007 and later vehicles during the initial years, the amount of 500 ppm fuel produced will gradually decrease from just over 20 percent in 2007 to about 16 percent in 2010.

The tankage cost at refineries, terminals, pipelines and bulk plants handling both fuels is estimated to be $0.81 billion. The cost for truck stops to handle two fuels is roughly $0.24 billion, for a total cost of $1.05 billion. Amortized over all of the highway diesel fuel supplied during the initial four-years (15 ppm and 500 ppm) at 7 percent per annum, the cost per gallon is 0.7 cents.

5. Benefits of Low-Sulfur Diesel Fuel for the Existing Diesel Fleet

We estimate that the low-sulfur diesel fuel will provide additional benefits to the existing heavy-duty vehicle fleet as soon as the fuel is introduced. We believe these benefits will offer significant cost savings to the vehicle owner without the need for purchasing any new technologies. The RIA has catalogued a variety of benefits from the low-sulfur diesel fuel. These benefits are summarized in Table V.C–3.

TABLE V.C–3.—COMPONENTS POTENTIALLY AFFECTED BY LOWER SULFUR LEVELS IN DIESEL FUEL

Affected components	Effect of lower sulfur	Potential impact on engine system
Piston Rings	Reduce corrosion wear	Extended engine life and less frequent rebuilds.
Cylinder Liners	Reduce corrosion wear	Extended engine life and less frequent rebuilds.
Oil Quality	Reduce deposits and less need for alkaline additives.	Reduce wear on piston ring and cylinder liner and less frequent oil changes.
Exhaust System (tailpipe)	Reduces corrosion wear	Less frequent part replacement.
EGR	Reduces corrosion wear	Less frequent part replacement.

The actual value of these benefits over the life of the vehicle will depend upon the length of time that the vehicle operates on low-sulfur diesel fuel and the degree to which vehicle operators change engine maintenance patterns to take advantage of these benefits. For a vehicle near the end of its life in 2007 the benefits will be quite small. However for vehicles produced in the years immediately preceding the introduction of low-sulfur fuel the savings will be substantial. The RIA estimates that a heavy heavy-duty vehicle introduced into the fleet in 2006 will realize savings of $610 over its life. This savings could alternatively be expressed in terms of fuel costs as approximately 1 cent per gallon as discussed in the RIA. These savings will occur without additional new cost to the vehicle owner beyond the incremental cost of the low-sulfur diesel fuel, although these savings will require changes to existing maintenance schedules. Such changes seem likely given the magnitude of the savings and the nature of the regulated industry.

D. Aggregate Costs

Using current data for the size and characteristics of the heavy-duty vehicle fleet and making projections for the future, the diesel per-engine, gasoline per-vehicle, and per-gallon fuel costs described above can be used to estimate the total cost to the nation for the emission standards in any year. Figure V.D–1 portrays the results of these projections.[190] All capital costs have been amortized.

BILLING CODE 6560–50–P

[190] Figure V.E–1 is based on the amortized engine, vehicle and fuel costs as described in the RIA. Actual capital investments, particularly important for fuels, would occur prior to and during the initial years of the program.

EXHIBIT J

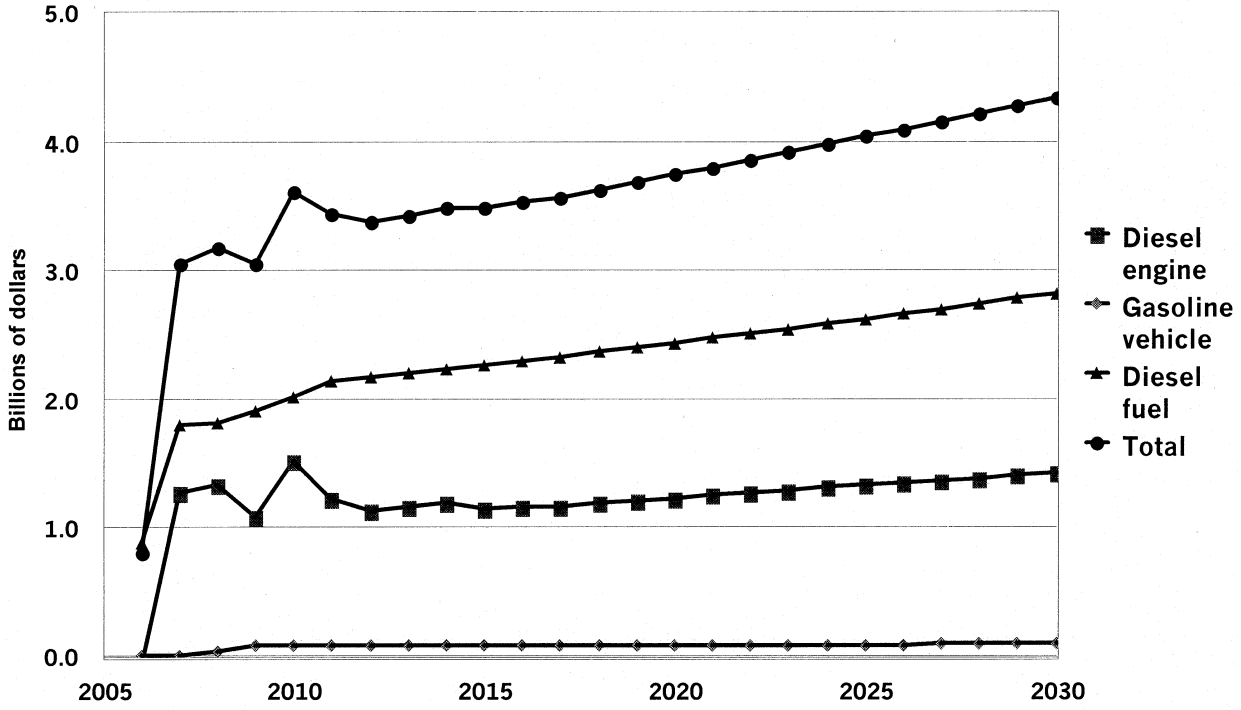

Figure V.D-1 Total Annualized Costs

BILLING CODE 6560–50–C

EXHIBIT J

As can be seen from the figure, the annual costs start out at less than 1.0 billion dollars in year 2006 and increase during the initial years to about $3.6 billion in 2010. Thereafter, total annualized costs are projected to continue increasing due to the effects of projected growth in engine sales and fuel consumption. The RIA provides further detail regarding these cost projections.

Future consumption of 15 ppm diesel fuel may be influenced by a potential influx of diesel-powered cars and light trucks into the light-duty fleet. At the present time, virtually all cars and light trucks being sold are gasoline fueled. However, the possibility exists that diesels will become more prevalent in the car and light-duty truck fleet, since automotive companies have announced their desire to increase their sales of diesel cars and light trucks. For the Tier 2 rulemaking, the Agency performed a sensitivity analysis using A.D.Little's ''most likely'' increased growth scenario of diesel penetration into the light-duty vehicle fleet which culminated in a 9 percent and 24 percent penetration of diesel vehicles in the LDV and LDT markets, respectively, in 2015 (see Tier 2 RIA, Table III.A.–13). Were this scenario to play out, the increased number of diesel-powered cars and light-duty trucks would increase the societal costs (those costs, in total, paid by consumers) for the higher priced diesel fuel because more diesel fuel would be consumed. However, were more diesel vehicles to penetrate the light-duty fleet, less gasoline would be consumed than was estimated in our Tier 2 cost analysis. Also, diesel vehicles tend to get higher fuel economy. As a result, the effect of increased dieselization of the light-duty fleet will likely have little or no impact on the aggregate costs estimated for the standards being finalized in today's action.

E. Cost Effectiveness

One tool that can be used to assess the value of new standards for heavy-duty vehicles and engines is cost effectiveness, in which the costs incurred to reach the standards are compared to the mass of emission reductions. This analysis results in the calculation of a $/ton value, the purpose of which is to show that the reductions from the engine and fuel controls being finalized today are cost effective, in comparison to alternative means of control. This analysis involves a comparison of our program not only to past measures, but also to other potential future measures that could be implemented. Both EPA and States have already adopted numerous control measures, and remaining measures tend to be more expensive than those previously employed. As we and States tend to employ the most cost effective available measures first, more expensive ones must be adopted to achieve further emission reductions.

Comments we received in response to our Notice of Proposed Rulemaking on the subject of our cost effectiveness analysis are addressed in the Response to Comments Document.

1. What Is the Cost Effectiveness of This Program?

We have calculated the cost-effectiveness of our diesel engine/gasoline vehicle/diesel sulfur standards based on two different approaches. The first considers the net present value of all costs incurred and emission reductions generated over the life of a single vehicle meeting our standards. This per-vehicle approach focuses on the cost-effectiveness of the program from the point of view of the vehicles and engines which will be used to meet the new requirements. However, the per-vehicle approach does not capture all of the costs or emission reductions from our diesel engine/gasoline vehicle/diesel sulfur program since it does not account for the use of 15 ppm diesel fuel in current diesel engines. Therefore, we have also calculated a 30-year net present value cost-effectiveness using the net present value of costs and emission reductions for all in-use vehicles over a 30-year time frame. The baseline or point of comparison for this evaluation is the previous set of engine, vehicle, and diesel sulfur standards (in other words, the applicable 2006 model year standards).

As described earlier in the discussion of the cost of this program, the cost of complying with the new standards will decline over time as manufacturing costs are reduced and amortized capital investments are recovered. To show the effect of declining cost in the per-vehicle cost-effectiveness analysis, we have developed both near term and long term cost-effectiveness values. More specifically, these correspond to vehicles sold in years one and six of the vehicle and fuel programs. Chapter VI of the RIA contains a full description of this analysis, and you should look in that document for more details of the results summarized here.

The 30-year net present value approach to calculating the cost-effectiveness of our program involves the net present value of all nationwide emission reductions and costs for a 30 year period beginning with the start of the diesel fuel sulfur program and introduction of model year 2007 vehicles and engines in year 2006. This 30-year timeframe captures both the early period of the program when very few vehicles that meet our standards will be in the fleet, and the later period when essentially all vehicles in the fleet will meet the new standards. We have calculated the 30-year net present value cost-effectiveness using the net present value of the nationwide emission reductions and costs for each calender year. These emission reductions and costs are given for every calendar year in the RIA, in addition to details of the methodology we used to calculated the 30-year net present value cost-effectiveness.

Our per-vehicle and 30-year net present value cost-effectiveness values are given in Tables V.E–1 and V.E–2. Table V.E–1 summarizes the per-vehicle, net present value cost-effectiveness results for our diesel engine/gasoline vehicle/diesel sulfur standards using sales weighted averages of the costs (both near term and long term) and emission reductions of the various vehicle and engine classes affected. Table V.E–2 provides the same information from the program 30-year net present value perspective. It is based on the net present value of the 30 year stream of vehicle and fuel costs and NMHC+ NO_X and PM emission reductions, resulting in the 30-year net present value cost-effectiveness. Diesel fuel costs applicable to diesel engines have been divided equally between the adsorber and trap, since 15 ppm diesel fuel is intended to enable all technologies to meet our standards. In addition, since the trap produces reductions in PM and also operates as an enabling device for the NO_X adsorber, we have divided the total trap costs equally between compliance with the PM standard and compliance with the NO_X and NMHC standards.

Tables V.E–1 and V.E–2 also display cost-effectiveness values based on two approaches to account for the reductions in SO_2 emissions associated with the reduction in diesel fuel sulfur. While these reductions are not central to the program and are therefore not displayed with their own cost-effectiveness, they do represent real emission reductions due to our program. The first set of cost-effectiveness numbers in the tables simply ignores these reductions and bases the cost-effectiveness on only the NO_X, NMHC, and PM emission reductions from our program. The second set accounts for these ancillary reductions by crediting some of the cost of the program to SO_2. The amount of cost allocated to SO_2 is based on the cost-effectiveness of SO_2

EXHIBIT J

emission reductions that could be obtained from alternative, potential future EPA programs. The SO_2 credit was applied only to the PM calculation, since SO_2 reductions are primarily a means to reduce ambient PM concentrations.

TABLE V.E–1.—PER-ENGINE [a] COST EFFECTIVENESS OF THE STANDARDS FOR 2007 AND LATER MY VEHICLES

Pollutants	Discounted lifetime cost effectiveness per ton	Discounted lifetime cost effectiveness per ton with SO_2 credit [b]
Near-term costs:		
NO_X+NMHC	$2,125	$2,125
PM	14,237	7,599
Long-term costs:		
NO_X+NMHC	1,621	1,621
PM	11,340	4,701

[a] As described above, per-engine cost effectiveness does not include any costs or benefits from the existing, pre-control, fleet of vehicles that would use the 15 ppm diesel fuel.
[b] $446 credited to SO_2 (at $4800/ton) for PM cost effectiveness.

TABLE V.E–2.—30-YEAR NET PRESENT VALUE [a] COST EFFECTIVENESS OF THE STANDARDS

	30-year n.p.v. cost effectiveness per ton	30-year n.p.v. cost effectiveness per ton with SO_2 credit [b]
NO_X+NMHC	$2,149	$2,149
PM	13,607	4,195

[a] This cost effectiveness methodology reflects the total fuel costs incurred in the early years of the program when the fleet is transitioning from pre-control to post-control diesel vehicles. In 2007 <10% of highway diesel fuel is anticipated to be consumed by 2007 MY vehicles. By 2012 this increases to >50% for 2007 and later MY vehicles.
[b] $7.1 billion credited to SO_2 (at $4800/ton).

2. Comparison With Other Means of Reducing Emissions

In comparison with other mobile source control programs, we believe that our program represents a cost effective strategy for generating substantial NO_X, NMHC, and PM reductions. This can be seen by comparing the cost effectiveness of today's program with a number of mobile source standards that EPA has adopted in the past. Table V.E–3 summarizes the cost effectiveness of several past EPA actions for NO_X+NMHC. Table V.E–4 summarizes the cost effectiveness of several past EPA actions for PM.

TABLE V.E–3.—COST EFFECTIVENESS OF PREVIOUS MOBILE SOURCE PROGRAMS FOR NO_X+NMHC

Program	$/ton
Tier 2 vehicle/gasoline sulfur	1,340–2,260
2004 Highway HD diesel	212–414
Off-highway diesel engine	425–675
Tier 1 vehicle	2,054–2,792
NLEV	1,930
Marine SI engines	1,171–1,846
On-board diagnostics	2,313
Marine CI engines	24–176

Note: Costs adjusted to 1999 dollars.

TABLE V.E–4.—COST EFFECTIVENESS OF PREVIOUS MOBILE SOURCE PROGRAMS FOR PM

Program	$/ton
Marine CI engines	5222–3881
1996 urban bus	12,264–19,622
Urban bus retrofit/rebuild	30,251
1994 highway HD diesel	20,900–24,467

Note: Costs adjusted to 1999 dollars.

We can see from these tables that the cost effectiveness of our diesel engine/gasoline vehicle/diesel sulfur standards falls within the range of these other programs for both NO_X+NMHC and PM. Our program overlaps the range of the recently promulgated standards for Tier 2 light-duty vehicles and gasoline sulfur shown in Table V.E–3. Our program also overlaps the cost-effectiveness of past programs for PM. It is true that some previous programs have been more cost efficient than the program we are finalizing today. However, it should be expected that the next generation of standards will be more expensive than the last, since the least costly means for reducing emissions is generally pursued first.

In evaluating the cost effectiveness of our diesel engine/gasoline vehicle/diesel sulfur program, we also considered whether the new standards are cost effective in comparison with possible stationary source controls. In the context of the Agency's rulemaking which would have revised the ozone and PM NAAQS,[191] the Agency compiled a list of additional known technologies that could be considered in devising new emission reductions strategies.[192] Through this broad review, over 50 technologies were identified that could reduce NO_X, VOC, or PM. The cost effectiveness of these technologies averaged approximately $5,000/ton for VOC, $13,000/ton for NO_X, and $40,000/ton for PM. Although a $10,000/ton limit was actually used in the air quality analysis presented in the NAAQS revisions rule, these values clearly indicate that, not only are future emission control strategies likely to be more expensive (less cost effective) than past strategies, but the cost effectiveness of our program falls well below the average of those choices, and is near the lower end of the range of potential future strategies.

In summary, we believe that the weight of the evidence from alternative means of providing substantial NO_X + NMHC and PM emission reductions indicates that our diesel engine/gasoline vehicle/diesel sulfur program is cost effective relative to other means of achieving air quality improvements. We believe this is true from the perspective of other mobile source control programs and from the perspective of other stationary source technologies that might be considered.

F. Does the Value of the Benefits Outweigh the Cost of the Standards?

While EPA uses relative cost-effectiveness as the principal economic policy criterion for these standards, further insight regarding the merits of the standards can be provided by benefit-cost analysis. The purpose of this section is to summarize the methods we used and results we obtained in conducting an analysis of the economic benefits of the HD Engine/Diesel Fuel program, and to compare these economic benefits with the estimated costs of the rule. In summary, the results of our analysis indicate that the economic benefits of the HD Engine/Diesel Fuel standards will exceed the costs of meeting the standards. The annual estimated benefits we were able to quantify were $70.4 billion (1999$).

1. What Was Our Overall Approach to the Benefit-Cost Analysis?

The basic question we sought to answer in the benefit-cost analysis was, "What are the net yearly economic benefits to society of the reduction in mobile source emissions likely to be

[191] This rulemaking was remanded to EPA by the D.C. Circuit Court on May 14, 1999. However, the analyses completed in support of that rulemaking are still relevant, since they were designed to investigate the cost effectiveness of a wide variety of potential future emission control strategies. An appeal is currently pending before the U.S. Supreme Court.

[192] Regulatory Impact Analyses for the Particulate Matter and Ozone National Ambient Air Quality Standards and Proposed Regional Haze Rule," Appendix B, "Summary of control measures in the PM, regional haze, and ozone partial attainment analyses," Innovative Strategies and Economics Group, Office of Air Quality Planning and Standards, U.S. Environmental Protection Agency, Research Triangle Park, NC, July 17, 1997.

EXHIBIT J

achieved by the final HD Engine/Diesel Fuel program?'' In designing an analysis to address this question, we selected a future year for analysis (2030) that is representative of full-implementation of the program (i.e., when the US heavy-duty truck fleet is composed of virtually only compliant heavy-duty vehicles). We also adopted an analytical structure and sequence similar to that used in the ''section 812 studies'' to estimate the total benefits and costs of the full Clean Air Act.[193] Moreover, we used many of the same models and assumptions used in the section 812 studies as well as other Regulatory Impact Analyses (RIAs) prepared by the Office of Air and Radiation. One difference from previous RIAs, however, is that for particulate matter air quality modeling we used the Regulatory Modeling System for Aerosols and Deposition (REMSAD) model. This model was used in the most recent section 812 study to model air quality in the West. By adopting the major design elements, models, and assumptions developed for the section 812 studies and other RIAs, we have largely relied on methods which have already received extensive review by the independent Science Advisory Board (SAB), by the public, and by other federal agencies.

2. What Are the Significant Limitations of the Benefit-Cost Analysis?

Every benefit-cost analysis examining the potential effects of a change in environmental protection requirements is limited to some extent by data gaps, limitations in model capabilities (such as geographic coverage), and uncertainties in the underlying scientific and economic studies used to configure the benefit and cost models. Deficiencies in the scientific literature often result in the inability to estimate changes in health and environmental effects, such as potential increases in premature mortality associated with increased exposure to carbon monoxide. Deficiencies in the economics literature often result in the inability to assign economic values even to those health and environmental outcomes which can be quantified. While these general uncertainties in the underlying scientific and economics literatures are discussed in detail in the RIA and its supporting documents and references, the key uncertainties which have a bearing on the results of the benefit-cost analysis of today's action are the following:

- The exclusion of potentially significant benefit categories (e.g., health and ecological benefits of reduction in hazardous air pollutants emissions);
- Errors in measurement and projection for variables such as population growth;
- Uncertainties in the estimation of future year emissions inventories and air quality;
- Uncertainties associated with the extrapolation of air quality monitoring data to some unmonitored areas required to better capture the effects of the standards on the affected population;
- Variability in the estimated relationships of health and welfare effects to changes in pollutant concentrations; and
- Uncertainties associated with the effect of potential future actions to limit emissions.

Despite these uncertainties, we believe the benefit-cost analysis provides a reasonable indication of the expected economic benefits of the HD Engine/Diesel Fuel program in 2030 under a set of assumptions. For the final HD Engine/Diesel Fuel benefit analysis, we adopt an approach similar to the Tier 2/Gasoline Sulfur RIA and the section 812 study. We first present an estimate for a primary set of benefit endpoints followed by a presentation of alternative calculations of key health and welfare endpoints to characterize uncertainty in this primary set.

One key area of uncertainty is the value of a statistical life (VSL) for risk reductions in mortality. The adoption of a value for the projected reduction in the risk of premature mortality is the subject of continuing discussion within the economic and public policy analysis community. There is general agreement that the value to an individual of a reduction in mortality risk tends to vary based on several factors, including the age of the individual, the type of risk, the level of control the individual has over the risk, the individual's attitude toward risk, and the health status of the individual. Age in particular may be an important difference between populations affected by air pollution mortality risks and populations affected by workplace risks. Premature mortality risks from air pollution tend to affect the very old more than the working age population. As such, any adjustments to VSL for age differences may have a large impact on total benefits. However, EPA prefers not to draw distinctions in the monetary value assigned to the lives saved even if they differ in age, health status, socioeconomic status, gender or other characteristic of the adult population.

In the recent Tier 2/Gasoline Sulfur benefits analysis, we employed a value of statistical life years (VSLY) approach developed for the Section 812 studies in exploring the impact of age on VSL. However, since these earlier analyses were completed, the SAB Environmental Economics Advisory Committee (EEAC) issued a new advisory report which identifies significant additional limitations in this method. Specifically, the SAB EEAC notes that ''inferring the value of a statistical life year, however, requires assumptions about the discount rate and about the time path of expected utility of consumption'' (EPA–SAB–EEAC–00–013). They also note that ''the theoretically appropriate method is to calculate [willingness to pay (WTP)] for individuals whose ages correspond to those of the affected population, and that it is preferable to base these calculations on empirical estimates of WTP by age.''

SAB advised that the EPA ''continue to use a wage-risk-based VSL as its primary estimate, including appropriate sensitivity analyses to reflect the uncertainty of these estimates,'' and that ''the only risk characteristic for which adjustments to the VSL can be made is the timing of the risk'' (EPA–SAB–EEAC–00–013). In developing our primary estimate of the benefits of premature mortality reductions, we have appropriately discounted over the lag period between exposure and premature mortality. However, an empirical basis that meets the SAB's standards of reliability for adjusting the current $6 million VSL for many of these factors does not yet exist. A discussion of these factors is contained in the RIA and supporting documents. EPA recognizes the need for additional research by the scientific community to develop additional empirical support for adjustments to VSL for the factors mentioned above.

In accordance with the SAB advice, we use the VSL in our primary estimate and present alternative calculations of adjustment for age and other factors. Specifically, several studies conducted by Jones-Lee, et al. (1985, 1989, 1993) found a significant effect of age on the value of mortality risk reductions expressed by citizens in the United Kingdom. The results are supported by a recent analysis which asked samples of Canadian residents their values for reductions in mortality risk (Krupnick *et al.*, 2000). As alternative calculations, we apply the ratios based on the Jones-

[193] The section 812 studies include: (1) US EPA, Report to Congress: The Benefits and Costs of the Clean Air Act, 1970 to 1990, October 1997 (also known as the ''Section 812 Retrospective Report''); and (2) the first in the ongoing series of prospective studies estimating the total costs and benefits of the Clean Air Act (see EPA report number: EPA–410–R–99–001, November 1999).

EXHIBIT J

Lee, *et al.* (1989, 1993) studies to the estimated premature mortalities within the appropriate age groups to provide alternative age-adjusted estimates of the value of avoided premature mortalities.

In the same way, the presentation of the other alternative calculations for certain endpoints seeks to demonstrate how much the overall benefit estimate might vary based on the value EPA has given to a parameter (which has uncertainty associated with it) underlying the estimates for human health and environmental effect incidence and the economic valuation of those effects. These alternative calculations represent conditions that might occur; however, EPA has selected the best values supported by current scientific literature for use in the primary estimate. The alternate calculations include the following:

- Estimating PM-related premature mortality benefits based on different concentration-response (C–R) function estimates;
- Value of avoided premature mortality incidences based on VSLY;
- Consideration of reversals in chronic bronchitis treated as lowest severity cases;
- Estimate of ozone-related chronic asthma;[194]
- Value of visibility changes in all Federal Class I areas;
- Value of visibility changes in US residential areas;
- Value of reduced household soiling damage;
- Alternative sensitivities of crops to ozone exposure from National Crop Loss Assessment Network estimates; and
- Avoided costs of reducing nitrogen loadings in three case study eastern estuaries and nine other eastern estuaries.

Unfortunately, it is not possible to combine all of the assumptions used in the alternate calculations to arrive at different total benefit estimates because, it is highly unlikely that the selected combination of alternative values would all occur simultaneously. Therefore, it is better to consider each alternative calculation individually to assess the sensitivity of total benefits to individual assumptions. For instance, estimating PM-related premature mortality benefits based on different concentration-response functions may be an important uncertainty. Specifically, the Harvard Six Cities study by Dockery *et al.* (1993) of the relationship between PM concentration and premature mortality is a plausible alternative to the American Cancer Society (ACS)/Krewski *et al.* (2000) study used for the primary estimate of benefits. The SAB has noted that ''the study had better monitoring with less measurement error than did most other studies'' (EPA–SAB–COUNCIL–ADV–99–012, 1999). However, the Dockery *et al.* study had a more limited geographic scope (and a smaller study population) than the ACS/Krewski *et al.* study and the ACS/Krewski *et al.* study appears more likely to mitigate a key source of potential confounding. The Dockery *et al.* study did cover a broader age category (25 and older compared to 30 and older in the ACS study) and followed the cohort for a longer period (15 years compared to 8 years in the ACS study). For these reasons, the Dockery *et al.* study is considered to be a plausible alternative estimate of the avoided premature mortality incidences associated with this final rule. The alternative estimate for mortality can be substituted for the valuation component in our primary estimate of mortality benefits to observe how the net benefits of the program may be influenced by this assumption.

In addition to the estimate for the primary set of endpoints and alternative calculations of benefits, our RIA also presents an appendix with supplemental benefit estimates and sensitivity analyses of other key parameters in the benefits analysis that have greater uncertainty surrounding them due to limitations in the scientific literature. The following sensitivity analyses include alternative income elasticities of willingness to pay;[195] alternative discount rates;[196] alternative PM exposure lags preceding mortality; threshold analysis for PM mortality;[197] and other analyses.

Even with our efforts to fully disclose the uncertainty in our estimate, this uncertainty presentation method does not provide a definitive or complete picture of the true range of monetized benefits estimates. The set of alternative calculations is only representative of those benefits that we were able to quantify and monetize.

3. How Has the Benefit-Cost Analysis Changed From Proposal?

No quantitative benefits analysis was conducted for the proposal, although we outlined the methodology to be used for the final rule analysis. We summarized and responded to public comment regarding the methods in the Summary and Analysis of Comment document. Moreover, we have improved the methods that were presented at proposal. For the benefits assessment for the final rule, EPA updated the C–R functions for health endpoints (*e.g.,* Krewski *et al.,* 2000), updated the emissions inventory, and presented air quality information regarding urban and residential visibility. For the air quality inputs to the benefits analysis, we used the REMSAD model which offers improved chemistry, resolution, and other capabilities over the Source-Receptor Matrix discussed in the proposal. The model's performance, including uncertainties, are discussed elsewhere in the RIA and technical support documents. In addition, we also updated our presentations of monetary benefits of the reduced premature mortality based on advice from the SAB.[198] All of the changes made since the proposal serve to improve the analysis.

4. What Are the Benefits in the Years Leading up to 2030?

The HD Engine/Diesel Fuel program has various cost and emission related components, as described earlier in this section. These components would begin at various times and in some cases would phase in over time. This means that during the early years of the program there would not be a consistent match between cost and benefits. This is especially true for the vehicle control portions of the program, where the full vehicle cost would be incurred at the time of vehicle purchase, while the fuel cost along with the emission reductions and benefits resulting from all these costs would occur throughout the lifetime of the vehicle. Because of this

[194] McDonnell, W.F., D.E. Abbey, N.Nishino, M.D. Lebowitz. Long-term Ambient Ozone Concentration and the Incidence of Asthma in Nonsmoking Adults: The Ahsmog Study. Environmental Research. A:80, 110–121. 1999.

[195] Income elasticity of WTP characterizes the relationship between changes in real income and changes in the WTP for a particular commodity. Income elasticity of WTP is measured as the percentage change in WTP for a one percent change in real income. For example, an income elasticity of 0.5 implies that a 10 percent increase in real income would lead to a 5 percent increase in WTP.

[196] The choice of a discount rate, and its associated conceptual basis, is a topic of ongoing discussion within the federal government. EPA adopted a 3 percent discount rate for its primary analysis in this case to reflect reliance on a ''social rate of time preference'' discounting concept. We have also calculated benefits and costs using a 7 percent rate consistent with an ''opportunity cost of capital'' concept to reflect the time value of resources directed to meet regulatory requirements. In this case, the benefit and cost estimates were not significantly affected by the choice of discount rate. Further discussion of this topic appears in EPA's Guidelines for Preparing Economic Analyses (in press).

[197] The SAB has advised EPA that there is no current scientific basis for selecting a threshold for PM-related health effects considered in this analysis (EPA–SAB–Council–ADV–99–012, 1999).

[198] Full documentation of the SAB advice can be found at their website *(www.epa.gov/sab)* or in the docket under the following reference: EPA–SAB–EEAC–00–013, July 27, 2000. An SAB Report on EPA's White Paper Valuing the Benefits of Fatal Cancer Risk Reduction.

EXHIBIT J

inconsistency and our desire to more appropriately match the costs and emission reductions of our program, our analysis uses a future year when the fleet is nearly fully turned over (2030).

In the years before 2030, the benefits from the HD Engine/Diesel Fuel program will be less than those estimated here, because the compliant heavy-duty fleet will not be fully phased in. Annualized costs, on the other hand, reach nearly their full value within a few years of program initiation (once all phase-ins are completed). This can be seen by comparing the anticipated emission reductions described earlier in section II.D with the aggregate costs of section V.E. Thus, a benefit-cost ratio computed for the earlier years of the program would be expected to be lower than a ratio based on our 2030 analysis. On the other hand, since the estimated benefits are more than ten times the costs in 2030, the emission reduction and cost trends suggest that it is likely that annual benefits would exceed costs from a time early in the life of the program.[199]

Furthermore, to the extent that a lower ratio of benefits to costs early in the program is the result of the mismatch of costs and benefits in time, a simple analysis of an individual year would be misleading. A more appropriate means of capturing the impacts of timing differences in benefits and costs would be to produce a net present value comparison of the costs and benefits over some period of years (an approach analogous to the aggregate cost effectiveness presented in section V.F). Unfortunately, while this is relatively straight-forward for the costs, it is currently not feasible to do a multi-year analysis of the benefits as this would require a significant amount of air quality modeling to capture each year.

5. What Were the Results of the Benefit-Cost Analysis?

The benefit-cost analysis for the HD Engine/Diesel Fuel program reflects a single year ''snapshot'' of the yearly benefits and costs expected to be realized once the standards have been fully implemented and non-compliant vehicles have all been retired. As discussed in section V.F–4, the benefit-cost ratio would be expected to be lower than the results calculated here in the early years of the program.

Table V.F–1 presents EPA's primary estimate of the benefits of the rule, both the estimated reductions in incidences and the estimated economic value of those incidence reductions. In interpreting the results, it is important to keep in mind the limited set of effects we are able to monetize. Specifically, the table lists the avoided incidences of individual health and environmental effects, the pollutant associated with each of these endpoints, and the estimated economic value of those avoided incidences. For several environmental effects such as visibility, the concept of incidences or cases does not apply as it does for health effects; thus, for these categories economic values are applied directly to air quality conditions. As the table indicates, we estimate that the HD Engine/Diesel Fuel program will produce about 5,500 fewer cases of chronic bronchitis, and we also see significant improvements in minor restricted activity days (with an estimated 9,838,500 fewer cases). Our estimate also incorporates significant reductions in impacts on children's health, showing reductions of 17,600 cases of acute bronchitis, 192,900 fewer cases of lower respiratory symptoms, and 193,400 fewer cases of upper respiratory symptoms in asthmatic children each year. In addition, today's rule is estimated to reduce 361,400 incidents of asthma attacks each year in asthmatics of all ages from reduced exposure to ozone and particles. Asthma is the most prevalent chronic disease among children and currently affects over seven percent of children under 18 years of age.

Total monetized benefits, however, are driven primarily by the estimated 8,300 fewer premature fatalities each year, which account for almost 89 percent of total benefits. We assume for this analysis that some of the incidences of premature mortality related to PM exposures occur in a distributed fashion over the five years following exposure. To take this into account in the valuation of reductions in premature mortality, we apply an annual three percent discount rate to the value of premature mortality occurring in years after our analysis year.

TABLE V.F–1.—EPA PRIMARY ESTIMATE OF THE ANNUAL QUANTIFIED AND MONETIZED BENEFITS ASSOCIATED WITH IMPROVED AIR QUALITY RESULTING FROM THE HD ENGINE/DIESEL FUEL RULE IN 2030 [A]

Endpoint	Pollutant	Avoided incidence [A C] (cases/year)	Monetary benefits [A D] (millions 1999$)
Premature mortality [B] (adults, ages 30 and over)	PM [B]	8,300	$62,580
Chronic bronchitis	PM	5,500	$2,430
Hospital Admissions from Respiratory Causes	Ozone and PM	4,100	$60
Hospital Admissions from Cardiovascular Causes	Ozone and PM	3,000	$50
Emergency Room Visits for Asthma	Ozone and PM	2,400	<$5
Acute bronchitis (children, ages 8–12)	PM	17,600	<$5
Upper respiratory symptoms (asthmatic children, ages 9–11)	PM	193,400	$10
Lower respiratory symptoms (children, ages 7–14)	PM	192,900	<$5
Asthma attacks (asthmatics, all ages) [E]	Ozone and PM	361,400	B_a
Work loss days (adults, ages 18–65)	PM	1,539,400	$160
Minor restricted activity days (adults, ages 18–65) (adjusted to exclude asthma attacks).	Ozone and PM	9,838,500	$530
Other health effects [E]	Ozone, PM, CO, NMHC	$U_1+U_2+U_3+U_4$	$B_1+B_2+B_3+B_4$
Decreased worker productivity	Ozone		$140
Recreational visibility (86 Class I Areas)	PM		$3,260
Residential visibility	PM		B_5
Household soiling damage	PM		B_6
Materials damage	PM		B_7
Nitrogen Deposition to Estuaries	Nitrogen		B_8
Premature mortality [B] (adults, ages 30 and over)	PM [B]	8,300	$62,580

[199] While emission reduction trends give a general indication of the likely trends in the benefits, there are sufficient non-linearities and interactions among pollutants in the atmospheric chemistry used in our modeling that it is not possible to attempt a quantitative estimate of the benefits simply from changes in the inventories in years that were not fully modeled.

EXHIBIT J

TABLE V.F–1.—EPA PRIMARY ESTIMATE OF THE ANNUAL QUANTIFIED AND MONETIZED BENEFITS ASSOCIATED WITH IMPROVED AIR QUALITY RESULTING FROM THE HD ENGINE/DIESEL FUEL RULE IN 2030 [A]—Continued

Endpoint	Pollutant	Avoided incidence [A+C] (cases/year)	Monetary benefits [A+D] (millions 1999$)
Chronic bronchitis	PM	5,500	$2,430
Hospital Admissions from Respiratory Causes	Ozone and PM	4,100	$60
Hospital Admissions from Cardiovascular Causes	Ozone and PM	3,000	$50
Emergency Room Visits for Asthma	Ozone and PM	2,400	<$5
Acute bronchitis (children, ages 8–12)	PM	17,600	<$5
Upper respiratory symptoms (asthmatic children, ages 9–11)	PM	193,400	$10
Lower respiratory symptoms (children, ages 7–14)	PM	192,900	<$5
Asthma attacks (asthmatics, all ages) [E]	Ozone and PM	361,400	B_a
Work loss days (adults, ages 18–65)	PM	1,539,400	$160
Minor restricted activity days (adults, ages 18–65)	Ozone and PM	9,838,500	$530
(adjusted to exclude asthma attacks)			
Other health effects [E]	Ozone and PM	$U_1+U_2+U_3+U_4$	$B_1+B_2+B_3+B_4$
	CO, NMHC		
Decreased worker productivity	Ozone		$140
Agricultural crop damage (6 crops)	Ozone		$1,120
Commercial forest damage, (6 species in Eastern US)	Ozone		B_9
Commercial forest damage, other	Ozone		B_{10}
Other welfare effects [E]	Ozone, PM		$B_{11}+B_{12}+B_{13}+B_{14}$
	CO, NMHC		
Monetized Total [F]			$70,360+B

Notes:
[A] Ozone-related benefits are only calculated for the Eastern US due to unavailability of reliable modeled ozone concentrations in the Western US, thus underestimating national ozone-related benefits. See RIA and technical support documents for details.
[B] Premature mortality associated with ozone is not separately included in this analysis. It is assumed that the ACS/Krewski, *et al.* (2000) C–R function for premature mortality captures both PM mortality benefits and any mortality benefits associated with other air pollutants. Also note that the valuation assumes the 5 year distributed lag structure described earlier and a 3 percent discount rate over that lag period.
[C] Incidences are rounded to the nearest 100.
[D] Dollar values are rounded to the nearest 10 million. Monetary benefits account for growth in real GDP per capita between 1990 and 2030.
[E] The Ui are the incidences and the Bi are the values for the unquantified category i. For some categories such as asthma attacks, we were able to quantify the reduction in incidence, but we present the monetization as an alternative calculation. A detailed listing of unquantified PM, ozone, CO, and NMHC related health and welfare effects is provided in Table V.F–2. NMHC shown here are also hazardous air pollutants listed in the Clean Air Act.
[F] B is equal to the sum of all unmonetized categories, *i.e.* Ba+B1+B2+...+Bn.

This table also indicates with a ''B'' those additional health and environmental benefits which could not be expressed in quantitative incidence and/or economic value terms. A full listing of the benefit categories that could not be quantified or monetized in our estimate are provided in Table V.F–2. For instance, visibility is expected to improve in all areas of the country, with the largest improvements occurring in heavily populated residential areas (*e.g.,* half of the urban areas show an improvement of 0.5 deciviews or more). However, due to limitations on sources to value these effects, we include a ''B'' in the primary estimate table for this category. Likewise, the HD Engine/Diesel Fuel rule will also provide progress for some estuaries to meet their goals for reducing nitrogen deposition (*e.g.,* nitrogen loadings for the Albemarle/Pamlico Sound are reduced by 24 percent of their reductions goal), however, this endpoint is also displayed with a ''B'' in the table. A full appreciation of the overall economic consequences of the HD Engine/Diesel Fuel standards requires consideration of all benefits and costs expected to result from the new standards, not just those benefits and costs which could be expressed here in dollar terms.

In summary, EPA's primary estimate of the benefits of the HD Engine/Diesel Fuel rule is $70.4 billion in 2030. This estimate accounts for growth in real gross domestic product (GDP) per capita between 1990 and 2030.

TABLE V.F–2.—ADDITIONAL, NON-MONETIZED BENEFITS OF THE HD ENGINE/DIESEL FUEL STANDARDS

Pollutant	Unquantified effects
Ozone Health	Premature mortality; [A] Increased airway responsiveness to stimuli; Inflammation in the lung; Chronic respiratory damage; Premature aging of the lungs; Acute inflammation and respiratory cell damage; Increased susceptibility to respiratory infection; and Non-asthma respiratory emergency room visits.
Ozone Welfare	Decreased yields for commercial forests; Decreased yields for fruits and vegetables; Decreased yields for non-commercial crops; Damage to urban ornamental plants; Impacts on recreational demand from damaged forest aesthetics; and Damage to ecosystem functions.
PM Health	Infant mortality; Low birth weight; Changes in pulmonary function; Chronic respiratory diseases other than chronic bronchitis; and Morphological changes.
PM Welfare	Visibility in non-class I areas; Soiling and materials damage; and Damage to ecosystem functions.
Nitrogen and Sulfate Deposition Welfare.	Impacts of acidic sulfate and nitrate deposition on commercial forests; Impacts of acidic deposition to commercial freshwater fishing; Impacts of acidic deposition to recreation in terrestrial ecosystems; Reduced existence values for currently healthy ecosystems; Impacts of nitrogen deposition on commercial fishing, agriculture, and forests; Impacts of nitrogen deposition on recreation in estuarine ecosystems; and Damage to ecosystem functions.

EXHIBIT J

TABLE V.F–2.—ADDITIONAL, NON-MONETIZED BENEFITS OF THE HD ENGINE/DIESEL FUEL STANDARDS—Continued

Pollutant	Unquantified effects
CO Health	Premature mortality;[A] Behavioral effects; Hospital admissions—respiratory, cardiovascular, and other; Other cardiovascular effects; Developmental effects; Decreased time to onset of angina; and Non-asthma respiratory ER visits.
NMHC Health	Cancer (benzene, 1,3-butadiene, formaldehyde, acetaldehyde);[B] Anemia (benzene); Disruption of production of blood components (benzene); Reduction in the number of blood platelets (benzene); Excessive bone marrow formation (benzene); Depression of lymphocyte counts (benzene); Reproductive and developmental effects (1,3-butadiene); Irritation of eyes and mucus membranes (formaldehyde); Respiratory irritation (formaldehyde); Asthma attacks in asthmatics (formaldehyde); Asthma-like symptoms in non-asthmatics (formaldehyde); Irritation of the eyes, skin, and respiratory tract (acetaldehyde); and Upper respiratory tract irritation and congestion (acrolein).
NMHC Welfare	Direct toxic effects to animals; Bioaccumlation in the food chain; and Damage to ecosystem function.

[A] Premature mortality associated with ozone and carbon monoxide is not separately included in this analysis. In this analysis, we assume that the ACS/Krewski, *et al.* C–R function for premature mortality captures both PM mortality benefits and any mortality benefits associated with other air pollutants.
[B] Non-methane hydrocarbons related to this rule are also hazardous air pollutants listed in the Clean Air Act.

In addition, in analyzing the present rule, we recognized that the benefits estimates were subject to a number of uncertainties with other parameters. In Table V.F–3 we present key alternatives to assumptions regarding individual elements of the benefits analysis and their effect on the primary estimate of benefits. This table also displays some assumptions that can be made to value some of the categories that are indicated with a ''B'' in the primary estimate. For example, this table can be used to answer questions like, ''What would total benefits be if we were to use the ACS/Krewski, *et al.* regionally adjusted $PM_{2.5}$ C–R function to estimate avoided premature mortality?'' This table is not meant to be comprehensive but to identify the impact of key issues identified by EPA or in public comment as affecting the total benefits estimation.

TABLE V.F—3. KEY ALTERNATIVE BENEFITS CALCULATIONS FOR THE HD ENGINE/DIESEL FUEL RULE IN 2030[A]

Description of alternative		Avoided incidences	Impact on primary benefits estimate adjusted for growth in real income (million 1999$)
Alternative Concentration-Response Functions for PM-related Premature Mortality			
1. Krewski/ACS Study Regional Adjustment Model[B]		9,400	+$7,370 (+10.5%)
2. Pope/ACS Study[C]		9,900	+12,780 (+18.2%)
3. Krewski/Harvard Six-city Study[D]		24,200	+$118,500 (+168.4%)
Alternative Methods for Valuing Reductions in Incidences of PM-related Premature Mortality			
Value of avoided premature mortality incidences based on age-specific VSL	Jones-Lee (1989)[E]	8,300	−$28,510 (−40.5%)
	Jones-Lee (1993)[F]	8,300	−$6,820 (−10.0%)

[A] Section VII–.F of the RIA provides complete information about the estimates in this table.
[B] This C–R function is included as a reasonable specification to explore the impact of adjustments for broad regional correlations, which have been identified as important factors in correctly specifying the PM mortality C–R function.
[C] The Pope et al. C–R function was used to estimate reductions in premature mortality for the Tier 2/Gasoline Sulfur benefits analysis. It is included here to provide a comparable estimate for the HD Engine/Diesel Fuel rule.
[D] The Krewski et al. ''Harvard Six-cities Study'' estimate is included because the Harvard Six-cities Study featured improved exposure estimates, a slightly broader study population (adults aged 25 and older), and a follow-up period nearly twice as long as that of Pope, et al. and as such provides a reasonable alternative to the primary estimate.
[E] Jones-Lee (1989) provides an estimate of age-adjusted VSL based on a finding that older people place a much lower value on mortality risk reductions than middle-age or younger people.
[F] Jones-Lee (1993) provides an estimate of age-adjusted VSL based on a finding that older people value mortality risk reductions only somewhat less than middle-aged or younger people.

The estimated annualized 2030 cost for businesses to implement the final HD Engine/Diesel Fuel program from Table V.D–1 of the RIA is $4.3 billion (1999$). When considered in a broader social cost context of the cost to society of the resources used, which is the right metric for cost-benefit analysis, the annualized cost is $4.2 billion. The monetized benefits are approximately $70.4 billion and EPA believes there is considerable value to the public of the benefits it could not monetize. The net benefit that can be monetized is $66.2 billion. Therefore, implementation of the HD Engine/Diesel Fuel program is expected to provide society with a net gain in social welfare based on economic efficiency criteria. Tables V.F–4 summarizes the costs, benefits, and net benefits.

EXHIBIT J

TABLE V.F–4.—2030 ANNUAL MONETIZED COSTS, BENEFITS, AND NET BENEFITS FOR THE FINAL HD ENGINE/DIESEL FUEL RULE [a]

	Billions of 1999$
Annual compliance costs	$4.2
Monetized PM-related benefits [b]	$69.0 + B_{PM}
Monetized Ozone-related benefits [b, c]	$1.4 + B_{Ozone}
NMHC-related benefits	not monetized (B_{NMHC})
CO-related benefits	not monetized (B_{CO})
Total annual benefits	$70.4 + B_{PM} + B_{Ozone} + B_{NMHC} + B_{CO}
Monetized net benefits [d]	$66.2 + B

[a] For this section, all costs and benefits are rounded to the nearest 100 million. Thus, figures presented in this chapter may not exactly equal benefit and cost numbers presented in earlier sections of the chapter.
[b] Not all possible benefits or disbenefits are quantified and monetized in this analysis. Potential benefit categories that have not been quantified and monetized are listed in Table VII–1. Unmonetized PM- and ozone-related benefits are indicated by B_{PM} and B_{Ozone}, respectively.
[c] Ozone-related benefits are only calculated for the Eastern U.S. due to unavailability of reliable modeled ozone concentrations in the Western U.S. This results in an underestimate of national ozone-related benefits. See US EPA (2000a) for a detailed discussion of the UAM–V ozone model and model performance issues.
[d] B is equal to the sum of all unmonetized benefits, including those associated with PM, ozone, CO, and NMHC.

VI. Requirements for Engine and Vehicle Manufacturers

A. Compliance with Standards and Enforcement

We are making some changes to the compliance-related requirements that will apply to vehicles and engines certified to the new standards. These changes are described below. Changes related to the supplemental emission requirements are discussed in Section III.C, along with the discussion of revised standards for those requirements. In general, however, existing compliance provisions will continue to apply to the vehicles and engines subject to today's standards.

1. Allowable Maintenance

Our existing regulations contain provisions (40 CFR § 86.004–25) that would affect scheduled maintenance of NO_X adsorbers, PM traps, and other devices that may be used to comply with the new standards. These provisions limit the amount of maintenance to emission-related components that the manufacturer is allowed to conduct during durability testing (or specify in the maintenance instructions that it gives to operators). We believe that the continuation of these requirements is appropriate because we expect that, with very low fuel sulfur levels, these technologies will be very durable in use and will last the full useful life with little or no scheduled maintenance other than cleaning. However, we are modifying these provisions slightly. The existing regulations would have allowed a manufacturer to specify something as drastic as replacement of the adsorber catalyst bed or the trap filter after as little as 100,000–150,000 miles if there was a ''reasonable likelihood'' that the maintenance would get done. To ensure that no manufacturer underdesigns their adsorbers or traps (compared to the level of durability that is achievable), we are requiring that these technologies be designed to last for the full useful life of the engine. More specifically, the final regulations state that scheduled replacement of the PM filter element, NO_X adsorber, or other catalyst module bed is not allowed during the useful life, unless the manufacturer can show that the replacement will in fact occur and pays for the replacement. Otherwise, only cleaning and adjustment will be allowed as scheduled maintenance. It is important to note that this restriction only applies to the manufacturer's specified maintenance. Owners and operators are, of course, allowed to perform additional maintenance.

2. Emission Data Waivers

Today's action includes PM standards for all heavy-duty engines. However, because gasoline engines have inherently low PM emissions, it will be appropriate in some cases to waive the requirement to measure PM emissions for certification. Therefore, the final regulations give us the flexibility to allow manufacturers to certify gasoline engines and vehicles without measuring PM emissions, provided they can demonstrate compliance in some other way such as with previous data, analyses, or other information. The flexibility is the same as that allowed for PM emissions from light-duty gasoline vehicles and for CO emissions from heavy-duty diesel engines. We are also allowing the same type of analysis to be used with respect to formaldehyde emissions from all petroleum-fueled heavy-duty vehicles.

3. Crankcase Emissions

Section III describes a new requirement for manufacturers to control crankcase emissions from turbocharged diesel engines. Historically, control of crankcase emissions has meant sealing the crankcase and routing the crankcase gases into the air intake system so they can be combusted. However, some manufacturers have expressed a reasonable concern that this would be unnecessarily restrictive, and suggested that we should allow for alternative controls. Therefore, we are making some revisions from the proposed regulations. First, we are clarifying that this closed crankcase provision does not require that crankcase gases be routed into the engine intake. We will also allow manufacturers to route crankcase gases into the exhaust system, including upstream of the exhaust emission controls. Furthermore, we are also changing the regulations to allow manufacturers to instead measure crankcase emissions and add them to the measured exhaust emissions (or to measure them together). Manufacturers choosing to use this allowance rather than to seal the crankcase will need to modify their exhaust deterioration factors or to develop separate deterioration factors to account for increases in crankcase emissions as the engine ages. Manufacturers would also be responsible for ensuring that crankcase emissions would be readily measurable in use.

EXHIBIT J

4. Non-Conformance Penalties

We are not establishing non-conformance penalties (NCPs) for the new standards at this time. NCPs are monetary penalties that manufacturers can pay instead of complying with an emission standard. In order for us to establish NCPs for a specific standard, we would have to find that: (1) Substantial work will be required to meet the standard for which the NCP is offered; and (2) there is likely to be a ''technological laggard'' (*i.e.,* a manufacturer that cannot meet the standard because of technological (not economic) difficulties and, without NCPs, might be forced from the marketplace). According to the CAA (Section 206(g)), such NCPs ''shall remove any competitive disadvantage to manufacturers whose engines or vehicles achieve the required degree of emission reduction.'' We also must determine compliance costs so that appropriate penalties can be established. While we have established NCPs in past rulemakings, their use has been rare since the implementation of our averaging, banking and trading program.

We requested comment on the need for NCPs in this rulemaking. However, after reviewing the comments, we cannot conclude that NCPs will be needed. While we believe that substantial work will be required to meet the 2007 standards, we currently have no information indicating that a technological laggard is likely to exist. Recognizing that it may have been difficult for manufacturers to comment on these criteria at this early stage of development, when implementation of these standards is still more than six years away, it may be appropriate to reconsider NCPs in a future action.

5. Idle CO Standards

We are also eliminating the idle CO emission standards for heavy-duty vehicles and engines below 14,000 pounds beginning in the 2004 model year, provided they are certified to the OBD requirements of our Phase 1 rule. (See 65 FR 59896, October 6, 2000.) The certified OBD systems on those vehicles will likely serve as the basis for future inspection and maintenance tests in areas testing vehicles in that weight class. Certification data show that heavy-duty engines and vehicles are certifying with idle CO levels well below the standard. We believe that the existing standard is not the forcing function for these low idle CO levels, but instead it is the electronic computer-controlled engines of today. In effect, we believe that the idle CO standard places an unnecessary testing burden on manufacturers whose vehicles are certified to the OBD requirements. We also eliminated the idle CO standard for light-duty trucks in our Tier 2 rule. (See 65 FR 6698, February 10, 2000.) Note that we are considering a future rule that would implement OBD on engines over 14,000 pounds. We would consider eliminating the idle CO requirement for those engines in the event that OBD requirements are put into place.

B. Compliance With Phase-in Schedules

In Section III we described the phase-in options for diesel engine manufacturers. These options are based on percentages of a manufacturer's production. We recognize, however, that manufacturers need to plan for compliance well in advance of the start of production, and that actual production volumes for any one model year may differ from their projections. This is a bigger concern for the diesel engines than for gasoline engines because of the three-year phase-in of the new diesel NO_X standards. On the other hand, we believe that it would be inappropriate to base compliance solely on a manufacturer's projections. That could encourage manufacturers to overestimate their production of the low-emission engines, and could result in significantly lower emission benefits during the phase-in. Given these conflicting factors, we are finalizing a compromise approach. We will initially only require diesel manufacturers to project compliance with the phase-in based on their projected production volumes, provided that they made up any deficits (in terms of percent of production) the following year. Thus, a manufacturer that projected 50 percent of its production in 2007 would be low-NO_X (*i.e.,* meet the 0.20 g/bhp-hr NO_X standard), but that was only able to actually produce 45 percent of its production as low-NO_X, could achieve compliance by producing at least 55 percent of its production as low-NO_X in 2008. However,since production volumes differ from year to year, deficits would be calculated and made up based on numbers of engines or vehicles, rather than percent of production. This is similar to the approach that we used in phasing-in the Tier 2 emission standards.

Since we expect that a manufacturer making a good-faith projection of sales would not be very far off of the actual production volumes, we are limiting the size of the deficit that could be excused. In all cases, the manufacturer will be required to produce at least 25 percent of its production as low-NO_X engines in model years 2007, 2008, and 2009. Another important restriction is that manufacturers will not be allowed to have a deficit in the third year of the phase-in (2009). This restriction is being finalized to ensure that manufacturers are able to make up the deficit. Since they could not produce more than 100 percent low-NO_X engines in 2010, it would not be possible to make up a deficit from 2009.

C. Averaging, Banking, and Trading

We are continuing the basic structure of the existing ABT program for heavy-duty engines. This program allows manufacturers to certify their engine families at various specified emissions levels above or below the standard, as long as they comply with the applicable standards when averaged across their various engine families. More specifically, manufacturers are allowed to certify their engine families with various family emission limits (FELs), provided that in each model year the average of the FELs does not exceed the standard when weighted by the numbers of engines produced in each family for that model year. To do this, they generate certification emission credits by producing engine families that are certified below the applicable standard. These credits can then be used to offset the production of engine families that are certified to have emissions in excess of the applicable standards. Manufacturers are also allowed to bank these credits for later use or trade them to other manufacturers. We are adopting some restrictions to ensure that the environmental benefits of the program are not jeopardized as described in the Response to Comments document. These restrictions are described below along with other changes made in response to comments. We are continuing this ABT program because we believe that it will provide the manufacturers significant compliance flexibility. This compliance flexibility could be a significant factor in the manufacturers' ability to comply with the standards in 2007 and will help to allow implementation of the new, more stringent standards as soon as permissible under the CAA.

We proposed two separate averaging sets during the diesel phase-in period. In one set, engines would be certified to the 2.4 g/bhp-hr NO_X+NMHC standard (which applies for model years 2004–2006), and would be subject to the restrictions and allowances established for those model years. In the other set, engines would be certified to the 0.20 g/bhp-hr NO_X standard, and would be subject to the restrictions and allowances in the proposed program.

EXHIBIT J

While we proposed to not allow averaging between these two sets, based on the comments we received, the final regulations allow manufacturers to transfer credits across these averaging sets, with some restrictions. Manufacturers could use credits generated during the phase-out of engines subject to the 2.4 g/bhp-hr NO_X+NMHC standard to comply with the 0.20 g/bhp-hr NO_X standard, but these credits will be subject to a 20 percent discount. (Each gram of NO_X+NMHC credits from the phase-out engines would be worth 0.8 grams of NO_X credits in the new ABT program.) This discount reflects the fact that the change from our proposed ABT program provides manufacturers with substantial flexibility in meeting the final standards and also accounts for the NMHC component of the credit. In the first year of the phase-in, this flexibility will allow manufacturers to reduce fleetwide emissions more than would have been possible with the proposed program. Manufacturers will be able to reduce emissions for a substantial percentage of their production, reflecting the use of low-NO_X technologies, without being required to produce a full 50 percent of their production with NO_X emissions near or below 0.20 g/bhp-hr in the initial year of the phase-in. This generation and use of credits will give manufacturers a greater opportunity to gain experience with the low-NO_X technologies before they are required to meet the final standards across their full production. As part of the averaging program during the phase-in period (model years 2007–2009), we will allow diesel engine credits to be averaged across service class using a modified form of the ABT program. These credit exchanges would occur in the same manner as other credit exchanges, except that the credits generated from one service class would need to be calculated using the useful life and horsepower values of the engine family using credits. This would make the credit exchanges equivalent to the vehicle count phase-in provisions. This allowance is restricted to averaging. Banked or traded credits cannot be used across service class.

We are also adopting a restriction on the use of banked NO_X+NMHC credits generated from diesel engines certified to the 2.4 g/bhp-hr NO_X+NMHC standard. While we proposed to prohibit any such use, the final regulations will allow manufacturers to use banked credits to show compliance with the 0.20 g/bhp-hr standard, but the credits will be discounted by 20 percent when they are used for this purpose.[200] This is consistent with the cross-averaging set discount described above. In addition, we are setting an upper bound on the number of engines for which a manufacturer could use such banked credits during any one model year. The upper limit is ten percent of the manufacturer's annual U.S.-directed production of heavy-duty highway diesel engines, and would apply only for engines certified to FELs higher than 0.50 g/bhp-hr. We believe that this limit is necessary to prevent manufacturers from delaying the introduction of the low-NO_X technologies by using a large number of banked credits. This kind of delay would be contrary to the goals of the phase-in, which in large part is intended for manufacturers to gain some initial experience with the low-NO_X technologies for a limited portion of their production. Although it does not appear likely (based on manufacturer expectations) that such credits will exist in large numbers, this limit appears prudent to ensure that such a problem does not occur.

We are making similar changes to the ABT programs for heavy-duty gasoline engines and vehicles. We will allow exchange of credits from the chassis-certified vehicles to engines (and vice versa) on a credit for credit face-value basis, subject to a 20 percent discount.[201] The discount is necessary to account for the uncertainty in converting between g/mi standards and g/bhp-hr standards. We will also allow NO_X+NMHC credits from gasoline engines certified to the combined standards (including banked credits) to be used in the new NO_X-only ABT program, also subject to the 20 percent discount, for reasons discussed above and in the Response to Comments document. This discount would not apply for banked or averaged gasoline vehicle credits used within the vehicle ABT program, since the existing program is already a NO_X-only program. In connection to this option, we believe that it would be appropriate to allow gasoline engine manufacturers to voluntarily participate in an NMHC ABT program, instead of forcing them to convert their NO_X+NMHC credits into NO_X credits when the new standards take effect. While we believe that manufacturers will generally prefer to use these credits as NO_X credits, NMHC credits may be of some value to manufacturers since gasoline engine emission controls often have a NO_X-NMHC emission tradeoff much like the NO_X-PM tradeoff for diesel engines. Therefore, we are extending the ABT programs for gasoline engines and vehicles to include NMHC, beginning with the 2007 model year. These NO_X and NMHC ABT programs parallel the NO_X and PM ABT programs for diesels. In the NMHC ABT programs, the NMHC credits would be subject to the same allowances, restrictions, and discounts as the NO_X credits. In addition, we are adopting a provision to allow vehicle manufacturers to bank NMHC credits before 2008 for complete vehicles that are certified to the 2008 standards early. (Engine manufacturers are already allowed to bank NO_X+NMHC credits for model year 2004 and later engines.)

It is worth noting three other aspects of this new banking program. First we recognize that NO_X+NMHC credits are not the same as NO_X-only credits. However, both NMHC reductions and NO_X reductions have environmental value, although they are not necessarily equivalent. Thus, given the 20 percent discount that would be applied to the NO_X+NMHC credits if they are transferred into the new NO_X ABT program, we believe that it is appropriate to allow those credits to be used in the new NO_X program. This is especially true for diesels, which are expected to have low NMHC levels for model years 2004–2006 (probably about one-tenth of the expected NO_X levels). Second, the final program does not include the proposed provisions for banking undiscounted credits by meeting all of the new diesel standards early, because we believe that the early compliance option described in Section III would accomplish essentially the same flexibility. Finally, we are not finalizing any new discounts or restrictions for banked PM credits. Considering the simple 100 percent phase-in of the PM standards in 2007, we believe that such restrictions are not necessary to achieve the goals of this program for PM, especially given the 0.02 g/bhp-hr PM FEL cap, which is described below.

The existing ABT program includes limits on how high the emissions from credit-using engines can be. These limits are referred to as FEL caps. No engine family may be certified above these caps using credits. These limits provide the manufacturers compliance flexibility while protecting against the

[200] It should be noted that the existing regulations already contain provisions that would discount diesel NO_X+NMHC credits in some cases when they are banked or traded. The reason for this discount is an interest in encouraging engine designs that are significantly cleaner than the 2.4 g/bhp-hr standard while that standard is in effect. There are also similar provisions for gasoline engines and vehicles. While the new regulations do not change these existing provisions, they do account for the previous discount by capping the total discount at 20 percent.

[201] See preceding footnote.

EXHIBIT J

introduction of unnecessarily high-emitting engines. In the past, we have generally set the FEL caps at the emission levels allowed by the previous standard, unless there was some specific reason to do otherwise. However, we proposed much lower FEL caps, because the proposed standard levels were so much lower than the previous levels and because we wanted to ensure that manufacturers did not continue to produce old-technology high-emitting engines under the new program. In today's FRM, for model year 2007 and later diesel engines, we are adopting a more flexible cap for NO_X emissions during the first three years of the program than was proposed, but are adopting the proposed FEL cap for PM emissions. We believe that this approach for NO_X is more consistent with the rest of the ABT program (as is described above) than applying the proposed FEL cap during this interim period. Specifically, model year 2007 through 2009 diesel engines subject to the 0.20 g/bhp-hr standard will not be allowed to have NO_X emissions higher than 2.0 g/bhp-hr, or PM emissions higher than 0.02 g/bhp-hr. The NO_X level represents a conservative estimate of the emission level that is expected under the combined NO_X+NMHC standards that will apply beginning in model year 2004. The proposed NO_X FEL cap of 0.50 g/bhp-hr would not apply until model year 2010. We believe that the higher FEL cap is appropriate during the transition to the much lower standards, to allow some meaningful use of averaging. However, since the 2.0 g/bhp-hr cap is ten times the level of the new standard, it would not be appropriate as a long-term cap.

The PM cap is also lower than the previous standard of 0.10 g/bhp-hr. As noted above, this is being done in connection with the absence of the kind of restrictions on the use of PM credits that are being set for NO_X credits. The NO_X credits restrictions are designed to better coordinate the NO_X ABT program with the NO_X standard phase-in; and the PM standard is not phased-in. Without those types of restrictions, we believe that it is appropriate to adopt the proposed lower FEL cap to prevent the possibility of PM credits being used to delay the implementation of the program and its benefits.

The FEL caps for gasoline vehicles and engines are being set at the previous standards, and the approximate NO_X and NMHC levels inherent in the NO_X+NMHC standards that will apply for model year 2004–2007 engines. Since engine manufacturers will have the option of certifying their engines to a 1.5 g/bhp-hr NO_X+NMHC standard for model years 2004–2007 (instead of the 2005 standard of 1.0 g/bhp-hr), those manufacturers choosing that option, will also be allowed higher FEL caps for model years 2008–2010. All of these FEL caps are shown in Table VI.D–1 and are discussed in more detail in the Response to Comments document. These new FEL caps do not apply for the phase-out engines and vehicles.

TABLE VI.D–1.—NEW FEL CAPS FOR AVERAGING BANKING AND TRADING

	NO_X FEL cap	PM/NMHC FEL cap
HDDE	0.50 g/bhp-hr [a]	0.02 g/bhp-hr PM.
HDGE	0.50 g/bhp-hr [b]	0.30 g/bhp-hr [b] NMHC.
Complete HDGV less than or equal to 10,000 pounds GVWR	0.9 gpm	0.28 gpm NMHC.
Complete HDGV over 10,000 pounds GVWR	1.0 gpm	0.33 gpm NMHC.

[a] The NO_X FEL cap is 2.0 for model years 2007–2009 diesel engines.
[b] The NO_X and NMHC FEL caps are 0.80 and 0.40 g/bhp-hr, respectively, for model years 2008–2010 gasoline engines for manufacturers choosing to certify to the 1.5 g/bhp-hr NO_X+NMHC level in 2004.

D. FTP Changes to Accommodate Regeneration of Exhaust Emission Controls

It is expected that some of the exhaust emission control devices used to meet today's standards will have discrete regeneration events that could affect emission characteristics. For example, NO_X adsorbers incorporate discrete regenerations. The NO_X adsorber stores NO_X under normal conditions until the NO_X storage capacity is nearly full, at which point the regeneration event is triggered to purge the stored NO_X and reduce it across a catalyst. We expect that these regeneration events would be controlled by the engine computer, and would thus be generally predictable. Even passively regenerating catalytic PM trap designs can have discrete regeneration events that can be predictable.

Discrete regeneration events can be important because it is possible for exhaust emissions to increase during the regeneration process. The regeneration of a NO_X adsorber for instance, could result in increased particulates, NMHC and NO_X due to the rich exhaust gas required to purge and reduce the NO_X. We expect that in most cases, the regeneration events will be sufficiently frequent to be included in the measured emissions. Our feasibility analysis projects very frequent regeneration of the NO_X adsorbers, and continuously regenerating PM traps. Nevertheless, this issue becomes a regulatory concern because it is also conceivable that these emission storage devices could be designed in such a way that a regeneration event would not necessarily occur over the course of a single heavy-duty FTP cycle, and thus be unmeasured by the current test procedure. In addition, desulfation of NO_X adsorbers is clearly not likely to occur frequently enough to reliably be caught in the FTP. Since these regeneration events could produce increased emissions during the regeneration process, it will be important to make sure that regeneration is captured or accounted for as part of the certification testing.

In order to ensure control of emissions during regeneration (including desulfation), we will require manufacturers to determine and use a mathematical adjustment of measured emissions to account for increased emissions during infrequent regeneration events that do not occur during the testing. Conversely, we will also require manufacturers to provide us with a consistent reverse adjustment factor for tests in which the regeneration does occur. For example, if a system requires a desulfation after every 20 FTP transient cycles, and PM emissions increase by 0.01 g/bhp-hr during an FTP transient cycle with a desulfation, we

EXHIBIT J

will require measured emissions to be adjusted upward by 0.0005 g/bhp-hr (0.01 g/bhp-hr divided by 20 cycles) for all tests in which that regeneration does not occur. The equivalent reverse adjustment (downward) for tests in which the regeneration does occur would be 0.0095 g/bhp-hr (0.01 g/bhp-hr multiplied by 19/20). The reason that the adjustment downward would be so much larger than the adjustment upward is that it is correcting for a significant emission increase over a single emission test, while the adjustment downward would be correcting for that same emission increase over the other 19 tests. No adjustment will be made for events that are so frequent that they always occur during FTP testing. In designs for which these activities are not commanded at regular intervals, such as those based on changes in backpressure or NO_X levels, the manufacturer would be required to determine an average frequency of the regeneration (during repeat FTP transient tests). In all cases, manufacturers would need to provide information to allow testers to know when an infrequent regeneration has occurred during the test, such as by identifying the controller command signal for this event. If this information is not available, manufacturers would be required to meet the standards during all tests, without regard to whether a regeneration occurs.

E. Improvements to the Test Procedures

In response to manufacturer comments, we are finalizing changes to the test procedures to improve the precision of emission measurements. The changes fully address the manufacturers concerns about the potential effect of measurement precision on the feasibility of the standards. It is important to note that these changes are not intended to make measurements higher or lower, but only to improve the repeatability of the measurements. Based on our experience with these modified test procedures, and our discussions with manufacturers about their experiences, we are confident that these changes will not affect the stringency of the standards. These changes are summarized briefly here. A more complete description can be found in a memorandum to the docket.[202]

Most of the changes being finalized are in three general areas. Many of the changes are to the PM sampling procedure. These include changes to the type of PM filters that are used, and improvements in how PM filters are weighed before and after emission measurements, including requirements for more precise microbalances. Another area includes changes to the dilution air specifications to allow for lower dilution ratios. The final area of change is the NO_X calibration procedure. The new calibration procedures will result in more precise continuous measurement of very low concentrations of NO_X.

Other changes are being made to the regulations to allow for other measurement options. In some cases, manufacturers will be allowed to use their current procedures, even though EPA will adopt the changes for our own testing. The reason for this is that some of these changes may not be convenient or cost-effective in the short term, and manufacturers may be willing to live with some slightly higher measurement variability in order to lower testing costs. We believe that manufacturers should be able to individually optimize their test facilities in this manner. However, it is important for manufacturers to understand that we will conduct our confirmatory testing in the accurate and precise manner specified in these regulations.

We are including a new regulatory provision that specifies the steps that someone needs to go through to demonstrate that their own alternate measurement procedure is as good as or better than the procedure specified by our regulations. This provision is found in 40 CFR § 86.1306–07. It is also worth noting that, although we requested comment on changes to the NO_X humidity correction factors used for FTP testing, we did not receive any such comments. Thus we will continue to use the existing NO_X humidity correction factors for FTP testing.

F. Certification Fuel

It is well established that measured emissions are affected by the properties of the fuel used during the test. For this reason, we have historically specified allowable ranges for test fuel properties such as cetane and sulfur content. These specifications are intended to represent most typical fuels that are commercially available in use. Because today's action is lowering the upper limit for sulfur content in the field, we are also establishing a new range of allowable sulfur content for testing that is 7 to 15 ppm (by weight). We believe that this range best represents the fuel that diesel vehicles will potentially see in use. Beginning in the 2007 model year, these specifications will apply to emission testing conducted for Certification and Selective Enforcement Audits, as well as any other laboratory engine testing for compliance purposes. Because the same in-use fuel is used for light- and heavy-duty highway diesel vehicles, we are also changing the specifications for light-duty diesel vehicle testing.

It is important to note that while these specifications include the maximum sulfur level allowed for in-use fuel, we believe that it is generally appropriate to test using the most typical fuels. We expect that refineries will typically produce diesel fuel with about 7 ppm sulfur, and that the fuel could have slightly higher sulfur levels after distribution. Thus, we expect that we would use fuel having a sulfur content between 7 and 10 ppm sulfur for our emission testing. Should we determine that the typical in-use fuel has significantly more sulfur than this, we would adjust this target upward.

We are including a regulatory change to the heavy-duty gasoline test fuel specifications to make them the same as the recently established Tier 2 fuel specifications for light-duty vehicles. We are also extending to heavy-duty engines and vehicles the Tier 2 allowance for manufacturers to use California test gasoline for certification. As is the case with Tier 2, this allowance does not affect our authority to conduct our own testing using federal fuel. Also consistent with our approach under Tier 2, we will consider requests, prior to manufacturer or EPA in-use testing, to permit preconditioning procedures designed solely to remove the effects of high sulfur gasoline on vehicles produced through the 2007 model year.

We are also allowing as an option the use of the new diesel test fuel beginning in the 2004 model year for vehicles employing sulfur-sensitive technology that are certifying to the Tier 2 standards. This allowance to use the new fuel in model years 2004–2006 will only be available for vehicles for which the manufacturer recommends to the owner that the vehicle be operated on fuel with 15 ppm sulfur or less, where available. Any testing that we perform on these vehicles would also use fuel meeting this lower sulfur specification. This optional certification fuel provision is targeted at encouraging the introduction of low-emission light-duty diesel technologies under the new Tier 2 standards that will be taking effect at that time. The provision accounts for the fact that these vehicles will use the lower sulfur fuel during most, perhaps all, of their operating life, given the clear manufacturer recommendation for use of low-sulfur fuel in these vehicles, combined with prospects for early availability of this fuel under the

[202] Memorandum from Matthew Spears to Docket A–99–06, dated December 6, 2000.

EXHIBIT J

incentive provisions discussed in Section IV, and the assured availability of this fuel by mid-2006. Furthermore, we will allow manufacturers choosing to exercise this option in certifying vehicles for sale in both California and the other 49 states to use a fuel that, on a specification by specification basis, meets the requirements of either the federal or the California fuel specifications. This option is appropriate for light-duty vehicles and trucks since they would otherwise face a very complicated transition period, in which they would need to retest and potentially recalibrate vehicles for as many as four different test fuels during a three-year period.

G. Misfueling Concerns for Light- and Heavy-Duty Diesel Vehicles

As explained in Section III, the emissions standards contained in these regulations will make it necessary for manufacturers to employ exhaust emission control devices that require low-sulfur fuel to ensure proper operation. This action therefore restricts the sulfur content of highway diesel fuel sold in the U.S. There are, however, some situations in which vehicles requiring low-sulfur fuel may be accidentally or purposely misfueled with higher-sulfur fuel. Vehicles operated within the continental U.S. may cross into Canada and Mexico, countries that may not adopt the same low sulfur requirements on the same schedule. High-sulfur nonroad fuel may illegally be used by some operators to fuel highway vehicles. Any of these misfueling events could seriously degrade the emission performance of sulfur-sensitive exhaust emission control devices, or perhaps destroy their functionality altogether.

There are, however, some factors that help to mitigate concerns about misfueling. Most operators are very conscious of the need to ensure proper fueling and maintenance of their vehicles. The fear of large repair and downtime costs may often outweigh the temptation to save money through misfueling. The likelihood of misfueling in Canada and Mexico is lessened by current cross-border shipment practices and prospects for eventual harmonization of standards. Canada has recently expressed its intent to harmonize its fuel regulations with U.S. fuels standards.[203] This would offer vehicle owners the option of refueling with low-sulfur fuel there. Even if Canada were to lag behind the U.S. in mandating low-sulfur fuels, these fuels would likely become available along major through routes to serve the needs of U.S. commercial traffic that have the need to purchase it. In addition, there is less potential for U.S. commercial vehicles needing low-sulfur fuel to refuel in Canada because Canadian fuel is currently more costly than U.S. fuel. As a result, most vehicle owners will prefer to purchase fuel in the U.S., prior to entering Canada, whenever possible. This is facilitated by large tractor-trailer trucks that can have long driving ranges—up to 2,000 miles per tankful or so—and the fact that most of the Canadian population lives within 100 miles of the United States/Canada border.

In Mexico, the entrance of trucks beyond the border commercial zone has been prohibited since before the conclusion of the North American Free Trade Agreement in 1994. This prohibition applies in the U.S. as well, as entrance of trucks into the U.S. beyond the border commerce zone is also not allowed. Since these prohibitions are contrary to the intent of the Free Trade Agreement, a timetable was established to eliminate them.[204] However, these prohibitions remain in force at this time.

The NAFTA negotiations included creation of a ''corridor'' where commercial truck travel occurs, and where Mexico is obligated to provide ''low-sulfur'' fuel. At the time of the NAFTA negotiations, ''low-sulfur'' fuel was considered 500 ppm, which was the level needed to address the needs of engines meeting the 1994 emission standards. The travel prohibition currently in place may be lifted at some point. At that time, the issue of assuring, for U.S. vehicles, the availability of fuel with a sulfur level needed by the new technology may need to be addressed.

Even considering these mitigating factors, we believe it is reasonable to adopt additional measures with very minor costs to manufacturers, fuel distributors, and consumers. First, we are requiring that highway diesel fuel pumps and co-located nonroad diesel fuel pumps be prominently labeled, as described in Section VII.

We are also adopting a requirement that heavy-duty vehicle manufacturers notify each purchaser of a model year 2007 or later diesel-fueled vehicle that the vehicle must be fueled only with the low-sulfur diesel fuel meeting the regulations being adopted in this FRM. We believe this requirement is necessary to alert vehicle owners to avoid higher sulfur fuel in the U.S. and to seek out low-sulfur fuel when operating in areas such as Canada and Mexico where it may not be widely available. We are also requiring that model year 2007 and later heavy-duty diesel vehicles must be equipped by the manufacturer with labels on the dashboard and near the refueling inlet that say: ''Use Low Sulfur Diesel Fuel Only'' or ''Low Sulfur Diesel Fuel Only''. For non-integrated manufacturers, the engine manufacturer will be required to provide such a label to the vehicle manufacturer, which the vehicle manufacturer will be required to install. Optionally, if a vehicle manufacturer chooses to install its own label, the engine manufacturer will not be required to provide the label.

We believe that these measures will help vehicle owners find and use the correct fuel and will be sufficient to address misfueling concerns. Thus, more costly provisions, such as vehicles fuel inlet restrictors, will not be necessary.

We are also requiring that the labeling and purchaser notification requirements described above for heavy-duty vehicles also be applied to the light-duty diesel vehicles certified to the final Tier 2 standards using certification test fuel with 15 ppm or less sulfur. These vehicles are expected to also need the low-sulfur fuel and be equally susceptible to misfueling damage.

H. In-Use Compliance Levels During the Transition Years to New Technologies

The Phase 2 standards will be challenging for diesel and gasoline engine manufacturers to achieve, and will require manufacturers to develop new technologies for their engines. Not only will manufacturers be responsible for ensuring that these technologies will allow engines to meet the standards at the time of certification, they will also have to ensure that these technologies continue to be highly effective in a wide range of in-use environments so that their engines would comply in-use when tested by EPA. However, in the early years of a program that introduces new technology, there are risks of in-use compliance problems that may not appear in the certification process or during developmental testing. Thus, we believe that it is appropriate to adjust the compliance levels for assessing in-use compliance for low emission engines (i.e., diesel engines equipped with the new exhaust emission control devices expected for Phase 2 diesel engines, and gasoline engines

[203] ''Process Begins to Develop Long Term Agenda to Reduce Air Pollution from Vehicles and Fuels'', Environment Canada press release, May 26, 2000.

[204] See NAFTA, Volume II, Annex I, Reservations for Existing Measures and Liberalization Commitments, Pages I–M–69 and 70, and Pages I–U–19 and 20.

EXHIBIT J

employing Tier 2/Phase 2 level technology). This will provide assurance to the manufacturers that they will not face recall if they exceed standards by a small amount during this transition to clean technologies. This approach is very similar to that taken in the Tier 2 final rule, which involves a similar introduction of new technologies (65 FR 6796, February 10, 2000).

Table VI.H–1 shows the in-use adjustments that we will apply to diesel and gasoline engines. These adjustments will be added to the appropriate FELs (or for engines certified to the standards without the use of credits, to the standards themselves) in determining the in-use compliance level for a given in-use mileage. For example, a light HD diesel engine with a useful life of 110,000 miles and a NO_X FEL of 0.20 g/bhp-hr would have an in-use compliance level of 0.30 g/bhp-hr (0.20 + 0.10) throughout its useful life. A heavy HD diesel engine, having a useful life of 435,000 miles and a NO_X FEL of 0.20 g/bhp would have an in-use compliance level of 0.30 g/bhp-hr through 110,000 miles, 0.35 g/bhp-hr from there through 185,000 miles, and 0.40 g/bhp-hr through the remainder of its useful life. The adjustment levels were chosen to be roughly equivalent to the temporary in-use standard adjustments adopted for low-emitting vehicles in the Tier 2 program, accounting for the higher mileage requirements reflected in the useful lives of the larger heavy-duty engines. Note too in the table footnotes the limiting of these adjustments to engine certified to levels below certain threshold levels. This is similar to the approach taken in the Tier 2 rule which applied the in-use standards only to vehicles in certain low-emitting bins.

TABLE VI.H–1.—ADD-ON LEVELS USED IN DETERMINING IN-USE STANDARDS FOR DIESEL & GASOLINE ENGINES

Engine mileage (miles)	Diesel [a] and gasoline [b] NO_X Add-on level to FEL (g/bhp-hr)	Diesel PM Add-on level to FEL (g/bhp-hr)	Gasoline[c] NMHC Add-on level to FEL (g/bhp-hr)
<110,000	0.10	0.01	0.10
110,000 to 185,000	0.15	0.01	[d] N/A
185,000 to 435,000	0.20	0.01	[d] N/A

[a] Applicable to those diesel engines with FELs at or below 1.3 g/bhp-hr NO_X through 2011.
[b] Applicable to those gasoline engines with NO_X FELs at or below 0.5 g/bhp-hr through 2011.
[c] Applicable to those gasoline engines with NMHC FELs at or below 0.3 g/bhp-hr through 2011.
[d] Note that the useful life for gasoline engines is 110,000 miles, so these add-on levels have significance only to that mileage for gasoline engines.

Similar examples apply for diesel engine PM, with the exception that the PM in-use add-on level is a constant 0.01 regardless of mileage. Likewise for gasoline NMHC where the add-on level is a constant 0.10 g/bhp-hr through the 110,000 mile useful life.

These same in-use add-on levels will be applied to the certification SET and NTE levels after applying the SET and NTE multipliers for the purpose of determining the corresponding in-use standards. In other words, for heavy HD diesel engine with a NO_X FEL of 0.20 g/bhp-hr, the in-use SET standard would be 0.30, 0.35, and 0.40 g/bhp-hr in each respective mileage range (remember that the SET multiplier is 1.0 × the FTP standard or FEL). The in-use NTE standard, with a multiplier of 1.5 × the FTP standard or FEL, would be 0.40, 0.45, and 0.50 g/bhp-hr in each of the respective mileage ranges (0.20 × 1.5 = 0.30; + 0.1 = 0.40; + 0.15 = 0.45; + 0.20 = 0.50).

Note that these in-use add-on levels apply only to engines certified through the 2011 model year and having FELs below the specified levels. These levels are very low and represent levels we believe will require significant effort by manufacturers to reach. The in-use add-ons are available through 2011 because some diesel engine models may not incorporate the emission control technology until 2010 as a result of the final phase-in schedule. Engine models incorporating these technologies for the first time in 2010 may account for as many as 50 percent of all diesel engines sold in that year. We believe these engine models should be provided the in-use adjustment for at least the first two years of their market introduction. In the case of gasoline engines, the phase-in ends in the 2009 model year. However, we have decided to allow the in-use adjustments through model year 2011, consistent with the diesel provision.

For HD complete gasoline vehicles, and any complete diesel vehicles choosing the chassis certification option, we will have a flat in-use adjustment of 0.1 g/mile NO_X, 0.100 g/mile NMHC (gasoline vehicles only), and 0.01 PM for all weight classes. These in-use adjustments will apply only to those vehicles certified with FELs at or below the applicable Phase 2 standards. Further, they will apply for vehicles certified through 2010 so that those vehicle models newly certified to the Phase 2 standards in 2009 are given two years of certification experience prior to elimination of the in-use adjustments. Table VI.H–2 shows the adjustments that will apply to HD chassis certified vehicles.

TABLE VI.H–2.—IN-USE ADJUSTMENTS FOR CHASSIS CERTIFIED VEHICLES

Weight range (GVWR)	Durability period (miles)	NO_X [a] (g/mi)	NMHC [a] (g/mi)	PM (g/mi)
8,500 to 10,000 lbs.	120,000	0.1	0.100	0.01
10,000 to 14,000 lbs.	120,000	0.1	0.100	0.01

[a] Applicable to those vehicles with NO_X and/or NMHC FELs at or below the appropriate Phase 2 standards through 2010.

During the certification demonstration, manufacturers will still be required to demonstrate compliance with the unadjusted Phase 2 certification standards using deteriorated emission rates. Therefore,

EXHIBIT J

the manufacturer will not be able to use these in-use standards as the design targets for the engine or vehicle. They will need to project that most engines would meet the standards in-use without adjustment. The in-use adjustments will merely provide some assurance that they would not be forced to recall engines or vehicles because of some small miscalculation of the expected deterioration rates. Furthermore, given that a new diesel fuel will be in place and it will be sold alongside higher sulfur diesel fuel being marketed to the existing fleet, there is a small likelihood of accidental misfueling during the phase-in years as users become familiar with the importance of using the lower sulfur fuel. As discussed in detail in sections III.E and III.F, sulfur has adverse impacts on exhaust emission control devices.

VII. Highway Diesel Fuel Program: Compliance, Enforcement and Downstream Provisions

For the highway diesel fuel sulfur program that we are adopting today to be successful in achieving its large emission reduction goals, it is vital for all parties that are affected by the program to thoroughly understand what is expected of them to comply, what compliance options may apply to them, and how their compliance will be assessed and enforced. If you believe that you are or may be subject to the program, the most important information is found in the regulatory language following this preamble. There, readers will find the detailed legal requirements of the program for each party and how we will assess and enforce compliance with the program requirements.

A key purpose of this preamble is to supplement the regulatory language by providing a context for and an explanation of the requirements of the program. Section IV above discusses in some detail most of the requirements under the highway diesel fuel sulfur program adopted today. In addition, this section (Section VII) builds on the Section IV discussions by addressing specific compliance and enforcement provisions we have adopted in today's rule to ensure that highway diesel fuel standards are met at all points in the distribution system—from the refiner or importer that introduces the fuel into the distribution system, through all the parties that may distribute the fuel, to the retailers and other parties that provide the fuel to its ultimate user. This section also explains certain requirements of the program in more detail.

After touching on a few general aspects of the highway diesel fuel program, this section discusses the compliance and enforcement provisions that apply to refiners and importers and those that apply to the downstream parties that handle diesel fuel. This section also discusses diesel fuel sampling and testing for sulfur, reporting and recordkeeping requirements, limited exemptions from the program, and how liability for any noncompliance would be handled.

A. General Provisions

1. Definition of Diesel Fuel Covered by This Program

In this preamble, we refer to the fuel covered by the program adopted today as ''highway diesel fuel.'' For technical and legal consistency with the Clean Air Act and existing fuels regulations, the regulatory language associated with today's rule uses the term ''motor vehicle diesel fuel'' in order to assure consistency with the language in existing laws and regulations. ''Nonroad diesel fuel'' refers to diesel fuel intended for use in nonroad vehicles or equipment, and is not covered by the highway diesel fuel sulfur requirements of the program. However, any fuel that is available for highway vehicles and engines, whether or not it is also available for nonroad vehicles and engines or for other purposes, is treated as highway diesel fuel under today's program.

2. Relationship to Highway Diesel Standards

As discussed in Section IV above, today's final rule reduces the sulfur cap standard for highway diesel fuel from 500 ppm to 15 ppm nationally [205] effective in 2006. (Implementation dates are discussed further in Section VII.C.2. below.) The existing standards for cetane and aromatics will remain in effect and are not being changed by today's action (40 CFR § 80.29(a)). The highway diesel fuel sulfur, cetane, and aromatics standards will be enforced through sampling and testing at all points in the distribution system, combined with inspection of fuel delivery records and other commercial documents. The general compliance requirements of this rule are very similar to those in the current diesel fuel rule, except that the sulfur standard is substantially more stringent (see 40 CFR 80.29 and 80.30). Prior to the implementation dates for today's rule, all the requirements and prohibitions of the current diesel fuel rule will remain in effect, with limited modifications concerning sulfur sampling methods.

B. What Are the Requirements for Refiners and Importers?

1. General Requirements

As discussed earlier in this preamble, the sulfur sensitivity of emission controls that will be used on model year 2007 and later motor vehicles requires that the sulfur content of highway diesel fuel dispensed into 2007 and later heavy-duty vehicles not exceed 15 ppm. To ensure that highway diesel fuel meets this standard as it leaves the refinery or import facility, today's final rule adopts the proposed approach that if the sulfur content of highway diesel fuel at a refinery or import facility exceeds 15 ppm by any amount, the fuel is in violation of the sulfur standard. The determination of compliance with the sulfur standard for highway diesel fuel at the refinery level is not subject to a test tolerance.[206]

Consistent with the proposal, today's final rule does not require that refiners or importers engage in mandatory sampling and testing of every batch of highway diesel fuel they produce or import.[207] This is because the highway diesel fuel sulfur standard is a national cap standard and compliance can be monitored at any point in the distribution system by taking samples of fuel for testing. However, under the presumptive liability scheme, any refiner producing noncomplying product would face liability for fuel in violation of the standard, regardless where the violation is discovered. (See Sections VII.G. and VII.H. for a discussion of liability and penalties.) Consequently, we expect that refiners and importers will voluntarily test every batch of highway diesel fuel produced or imported for their own purposes, including the need to demonstrate compliance with pipeline specifications.

Today's program requires all refiners that on January 1, 2000 produced—or by June 1, 2006 expect to produce—highway diesel fuel for U.S. sale to

[205] Except as noted elsewhere in the preamble and final rule, today's rule applies to all states, including the State of California. See Section IV.F for unique implementation provisions for Alaska and exemptions for diesel fuel in certain U.S. territories.

[206] However, test variability is taken into account in determination of compliance for diesel fuel at locations downstream of the refinery or import facility. See Section VII.C.1.

[207] However, any refiner producing highway diesel fuel complying with the 500 ppm standard for use in pre-model year 2007 motor vehicles, under any of the several refiner flexibility options, would have to maintain records designating each batch as complying with the 15 ppm standard or the 500 ppm standard.

EXHIBIT J

register with EPA. Similarly, all importers that on January 1, 2000 imported—or by June 1, 2006 expect to import—highway diesel fuel into the U.S. also need to register with EPA. This registration process will provide an essentially complete and up-to-date picture of the universe of highway diesel suppliers that exist at the beginning of this program. Refiners and importer must register by December 31, 2001. See Section VII.E. below for more details about registration requirements.

2. Refiner and Importer Temporary Compliance Option Provisions and the Credit Trading Program

As described in Section IV.A.2 above, today's final rule adopts a program that allows refiners and importers to transition in the production and importation of 15 ppm sulfur content diesel fuel. The temporary compliance option is available to all refiners and importers and includes a credit averaging, banking, and trading program. This temporary compliance option allows a refiner or importer to designate and sell a certain percentage of its highway diesel fuel as fuel subject to a 500 ppm sulfur standard, for use in pre-2007 model year heavy-duty vehicles.

Section IV.A.2 above describes most of the compliance requirements associated with the temporary compliance option. The paragraphs below supplement the earlier information.

a. Early Credits Program

As discussed in Section IV.A.2.a, today's regulation allows refiners and importers to generate early credits (prior to June 1, 2006) under limited circumstances. Most of the compliance requirements associated with the early credits program are described in that section. The following paragraphs add certain supplemental information.

The early credits program has two sets of provisions: (1) credits generated after May 31, 2005 but before June 1, 2006, and (2) credits generated after June 1, 2001 but before May 31, 2005. For a refiner or importer to generate early credits after May 31, 2005, it must demonstrate that the 15 ppm fuel produced early was segregated in the distribution system and not commingled with current 500 ppm sulfur fuel. Only that volume the refiner could verify was actually sold as 15 ppm fuel at retail or to centrally-fueled fleets would be eligible for early credits. Prior to generating credits, the refiner or importer must submit a notification to EPA and demonstrate how it will ensure segregation of the fuel from other highway diesel fuel and that the fuel will be sold as 15 ppm fuel (*e.g.,* through voluntary pump labeling and/or through information provided in PTDs).

The program also specifies that early credits can be generated prior to June 1, 2005. In this case, however, the refiner or importer must demonstrate that the 15 ppm fuel will be used in vehicles certified to meet the 2007 particulate matter standard being adopted today for heavy-duty engines (0.01 g/bhp-hr) or in vehicles with retrofit technologies that achieve emission levels equivalent to the 2007 NO_X or PM standard verified as part of a retrofit program administered by EPA or a state. (See Section VIII for further discussion of the credit program for heavy-duty engines.) To meet this condition, the refiner or importer must notify EPA, and in its notification it must demonstrate that any early credits that it claims are only for the volume of 15 ppm fuel that is dispensed into vehicles meeting the emission standards as described above (*e.g.,* into designated fleet vehicles).

All early credits generated, banked, transferred, obtained or used must be identified as early credits in records and in reports. The refiner's annual pre-compliance reports must provide the volume of early credit fuel produced, credits generated, credits transferred, and continued demonstration that the early credit fuel is sold appropriately (*i.e.,* as 15 ppm fuel after May 31, 2005, or into vehicles meeting the 2007 standards up to May 31, 2005).

b. Credit Use in a Credit Deficit Situation

Today's rule allows a refinery or importer to have a credit deficit in any given year (as long as the deficit does not exceed five percent of its annual highway diesel fuel production) so long as the refinery or importer makes up for that credit deficit the next year. In other words, the year following the deficit the refiner or importer must have enough credits (or actual production volume of 15 ppm fuel) to cover the previous year's deficit and to cover the current year's compliance. A refinery or importer (by PADD) must use credits to cover its own compliance before it can transfer credits to another refinery or importer, and although a refinery is allowed to be in deficit for a given year, it cannot lawfully transfer credits in the deficit year.

c. Resolving Issues of Invalid Credits

We recognize that there is potential for credits to be generated by one party and subsequently purchased and used in good faith by another party, yet the credits are later found to have been calculated or created improperly, or otherwise found to be invalid. As with the RFG rule and the Tier 2/Gasoline Sulfur rule, invalid credits purchased in good faith cannot be legally used. To allow such use would not be consistent with the environmental goals of the regulation. Further, both the seller and purchaser of invalid credits would have to adjust their credit calculations to reflect the proper credits and either party (or both) could be deemed in violation if the adjusted calculations demonstrated noncompliance.

Nevertheless, our strong preference is to hold the credit seller liable for the violation, rather than the credit purchaser. As a general matter we would expect to enforce a shortfall in credit compliance calculations against the credit seller, and we would expect to enforce a compliance shortfall (caused by the good faith purchase of invalid credits) against a good faith purchaser only in cases where we are unable to recover sufficient valid credits from the seller to cover the shortfall. Moreover, in settlement of such cases we would strongly encourage the seller to purchase credits to cover the good faith purchaser's credit shortfall. EPA will consider the covering of a credit deficit through the purchase of valid credits a very important factor in mitigation of any case against a good faith purchaser, whether the purchase of valid credits is made by the seller or by the purchaser.

d. Compliance Provisions

Today's rule includes compliance provisions under the temporary compliance option to allow the determination of the volumes of each of the two grades of highway diesel fuel produced or imported by each participating refinery or importer. For parties participating in the credit program, the rule includes provisions to ensure compliance with the credit generation, banking and trading provisions. The requirements include the designation of each batch of highway diesel fuel as meeting either the 500 ppm sulfur standard or the 15 ppm highway diesel sulfur standard; maintenance of records concerning the volumes of each grade of highway diesel fuel produced (and for foreign refiners and importers, volumes by PADD of import); and maintenance of records concerning the generation, use, transfer and purchase of credits, if applicable (by PADD in the case of foreign refiners and importers). Beginning in 2007, annual compliance reports demonstrating compliance with the applicable provisions are required. These recordkeeping and reporting

EXHIBIT J

requirements are discussed more fully in Section VII.E below.

The rule also includes enforcement and compliance provisions to assure that highway diesel fuel subject to the 15 ppm sulfur standard is not caused to exceed the standard by being contaminated with highway diesel fuel subject to the 500 ppm sulfur standard (or other high sulfur products such as nonroad diesel fuel), and to assure that 500 ppm diesel fuel is not introduced into model year 2007 and later motor vehicles. Participating refiners and importers are required to provide identifying information on product transfer documents for highway diesel fuel subject to the 500 ppm standard to help prevent contamination of 15 ppm product. (As discussed more fully below, transfers of 15 ppm highway diesel fuel must also be accompanied by product transfer documents identifying such fuel.)

e. Additional Provisions for Importers of Diesel Fuel and for Foreign Refiners Subject to the Temporary Compliance Option and Hardship Provisions

Since today's final rule includes several compliance options that can be used by diesel fuel importers and foreign refiners, we are also including specific compliance and enforcement provisions to ensure compliance for imported highway diesel fuel. These special foreign refiner provisions are similar to those under the conventional gasoline regulations and the gasoline sulfur regulations (see 40 CFR 80.94 and 80.410).

Under today's rule, standards for highway diesel fuel produced by foreign refineries must be met by the importer, unless the foreign refiner has been approved to produce highway diesel fuel under the temporary compliance option or hardship provisions of today's rule. If the foreign refiner is so approved, the volume requirements are to be met by the foreign refinery and the foreign refinery would be the entity generating, using, banking or trading credits for the highway diesel fuel produced and imported into the U.S.

Any foreign refiner that applies for and obtains approval to produce highway diesel fuel subject to the temporary compliance option or hardship provisions will be subject to the same requirements as domestic refiners operating under the same provisions. Additionally, foreign refiners are subject to provisions similar to the provisions at 40 CFR 80.94 and 80.410, which include:

—Segregating highway diesel fuel produced at the foreign refinery until it reaches the U.S. and separately tracking volumes imported into each PADD;
—Controls on product designation;
—Load port and port of entry testing;
—Attest requirements; and
—Requirements regarding bonds and sovereign immunity.

These provisions aid the Agency in tracking highway diesel fuel from the foreign refinery to its point of import into this country. We believe these provisions are necessary and sufficient to ensure that foreign refiners' compliance can be monitored and that the requirements of today's rule can be enforced against foreign refiners. (For more discussion of the rationale for these enforcement provisions, see preamble to the final RFG/CG foreign refineries rule (see 62 FR 45533 (August 28, 1997) and the gasoline sulfur rule, 40 CFR 80.410).)

3. Refiner Hardship Provisions

a. General Refiner Hardship Provisions

Section IV.C. above describes two types of hardship provisions for which any refiner may petition. We will consider such petitions in cases of extreme unforseen circumstances and of extreme hardship circumstances. Petitions for extreme unforseen circumstances may be submitted at any time; petitions for extreme hardship circumstances must be submitted to EPA by June 1, 2002. If any relief granted includes allowing the refiner to produce 500 ppm highway diesel fuel (or additional 500 ppm highway diesel fuel beyond that allowed under the temporary compliance option) for use in pre-2007 heavy-duty vehicles and engines, we would apply enforcement provisions at least as stringent as those that apply for the temporary compliance option.

Any application for hardship relief later found to be based on false or inaccurate information will be void ab initio.

b. Small Refiner Hardship Provisions

Section IV.C.1 above describes three small refiner relief provisions. Section IV.C.1.b defines ''small refiner,'' Section IV.C.1.c describes the special provisions that approved small refiners are eligible for, and Section IV.C.1.d describes how a refiner applies for status as a small refiner. Section VII.E below describes the additional information that small refiners need to include in their application for small refiner status, in their pre-compliance reports, and in their annual compliance reports (these requirements vary depending on which small refiner provision they choose). Any application for small refiner status will be void ab initio if approval is based on false or inaccurate information.

For an approved small refiner to use the Diesel/Gasoline Compliance Date Option (described in Section IV.C. above) at one or more refineries, it must fulfill two main conditions: (1) 100 percent of the highway diesel volume it produces during each annual compliance period starting June 1, 2006 must meet the 15 ppm standard, and (2) the actual volume of highway diesel fuel it produces during each annual compliance period through 2010 must be at least 85 percent of its 1998–1999 baseline highway diesel fuel volume (i.e., through the end date of the extended small refiner interim gasoline program). If a refiner at some point did not fulfill one or both of these conditions, it would forfeit the entire three year extension (or any remaining portion of the extension) of its Tier 2/Gasoline Sulfur small refiner standards and would thus need to comply with the 30/80 ppm sulfur standards by January 1, 2008. During the period when the national gasoline sulfur standard would otherwise be in effect for a small refiner (2008–2010), if the refiner fails to meet the two conditions above, it would be subject to the 30/80 gasoline sulfur standard for that year and future years.

However, a small refiner may elect to petition EPA to permanently opt out of this Diesel/Gasoline Compliance Date Option and opt into another small refiner option or into the temporary compliance option, so long as it does so for the full year that the change in program options takes place. Once it makes that election, it must thereafter meet the 30/80 gasoline sulfur standard.

c. Relief for Refiners Supplying Gasoline to the Tier 2 Geographic Phase-In Area (GPA)

As discussed in Section IV.B, refiners or importers supplying gasoline to the Geographic Phase-In Area (GPA) established in the Tier 2/Gasoline Sulfur program may apply for an additional two years to meet interim Tier 2 GPA gasoline sulfur standards (through December 31, 2008). Similar to the criteria for small refiners under the Diesel/Gasoline Compliance Date Option above, a refiner wishing to receive this extension of the Tier 2 GPA standards must meet two main conditions: (1) 100 percent of the highway diesel volume it produces during each annual compliance period starting June 1, 2006 must meet the 15 ppm standard, and (2) the actual volume of highway diesel fuel it produces during each annual compliance period through 2008 must be at least 85 percent

EXHIBIT J

of its 1998–1999 baseline highway diesel fuel volume (i.e., through the end date of the extended GPA gasoline program). Refiners may not participate both in this option and the temporary compliance option.

To be eligible for this option, a refiner must apply to EPA in writing by December 31, 2001, at the same time that it registers as a highway diesel fuel producer with EPA. As with applications by refiners for ''small refiner'' status, a refiner's application must submit its average annual highway diesel volume baseline for 1998 and 1999 for each of its refineries it expects to be covered by the GPA provisions under today's program.

If a refiner did not fulfill one or both of the conditions above, it would forfeit the entire two-year extension of the GPA standards, or any remaining extension, and would thus need to comply with the 30/80 ppm sulfur standards by January 1 of the following year.

However, a refiner may elect to petition EPA to permanently opt out of this GPA program and opt into the temporary compliance option, so long as it does so for the full year that the change in program options takes place. Once it makes that election, it must thereafter meet the 30/80 gasoline sulfur standard.

C. What Requirements Apply Downstream of the Refinery or Import Facility?

1. Downstream Enforcement of the Standards

In the NPRM, we proposed an industry-wide 15 ppm cap on sulfur content for highway diesel fuel. In the proposal we stated our belief that refiners would likely have to produce diesel fuel meeting a 7–8 ppm average sulfur content in order to ensure compliance downstream. We received comments to the NPRM indicating that enforcing the 15 ppm sulfur cap at all levels of the distribution system downstream of the refinery or import facility would effectively require refiners to produce diesel fuel having a maximum sulfur content of 7 ppm due to variability in sulfur content test results that may occur between laboratories when testing the same sample of diesel fuel for sulfur content. Commenters stated that at test reproducibility level of +/−4 ppm,[208] refiners would have no assurance of downstream compliance with the 15 ppm cap if they produced any fuel with a sulfur content greater than 7 ppm. Consequently, commenters suggested either that we adopt a less stringent downstream sulfur standard, based on test variability, as was done in the Tier 2/Gasoline Sulfur rule (40 CFR 80.210), or that we state a downstream test tolerance, based on test variability.

After considering the comments, we agree that it is appropriate to recognize test variability in determination of compliance with the sulfur standard downstream of the refinery or import facility. However, we anticipate that the reproducibility of sulfur test methods is likely to improve to two ppm or even less by the time the rule goes into effect. Thus, today's rule provides that for all 15 ppm sulfur highway diesel fuel at locations downstream of the refinery or import facility, sulfur test results can be adjusted by subtracting 2 ppm to account for the expected reproducibility of sulfur test methods. The sole purpose of this downstream compliance provision is to address test variability concerns. With this change, we anticipate that refiners will be able to produce diesel fuel at an average level of approximately 7–8 ppm, as was intended by the proposal, without fear of causing a downstream violation due solely to test variability. As test methods improve in the future, we may reevaluate whether two ppm is the appropriate allowance for purposes of this compliance provision.

This change is not expected to undermine the environmental goals of the regulation since it should not result in diesel fuel exceeding the 15 ppm sulfur standard at any point in the distribution system. All highway diesel fuel subject to the 15 ppm standard is still required to meet the 15 ppm standard at the refinery gate, without allowance for test variability.[209] The purpose of taking testing variability into account in compliance determinations for fuel sampled downstream of the refinery or import facility is merely to ensure that fuel actually meeting the 15 ppm cap is not rejected by pipelines or otherwise treated as noncompliant due to concerns about testing variability. It is not expected to result in any increase in the actual sulfur content of highway diesel fuel above 15 ppm at any point in the distribution system.

2. Other Provisions

a. Implementation Dates

As discussed in Section IV.A, today's rule staggers the implementation dates for highway diesel fuel for use in 2007 and later vehicles to comply with the 15 ppm sulfur standard, based on a facility's position in the distribution system. Refiners and importers must meet the 15 ppm sulfur standard by June 1, 2006. Fuel in the distribution system downstream of the refinery or import facility, including fuel at truck loading terminals,but not including fuel at retail outlets or wholesale purchaser-consumers, must be in compliance by July 15, 2006. Highway diesel fuel at retailers' and wholesale purchaser-consumers' storage tanks must be in compliance by September 1, 2006, and pump labeling requirements (see Section VII.C.2.c below) also must be in place by that date. We believe the dates finalized in today's rule will allow sufficient time for downstream parties to transition tanks from 500 ppm sulfur levels to 15 ppm sulfur levels.

The date by which all highway diesel fuel produced by refiners must meet the 15 ppm sulfur standard is June 1, 2010.[210] The final compliance date for all highway diesel fuel in the distribution system to meet the 15 ppm standard, other than at retail outlets and wholesale purchaser-consumer facilities, is October 1, 2010. The final compliance date for all highway diesel fuel at retail and wholesale purchaser-consumer facilities to meet the 15 ppm sulfur standard is December 1, 2010.

b. Product Segregation and Contamination

Under today's diesel sulfur program, it is imperative that distribution systems segregate highway diesel fuel from high sulfur distillate products such as home heating oil and nonroad diesel fuel. The sulfur content of those products is frequently as high as 3,000 ppm. We are also concerned about potential misfueling at retail outlets and wholesale purchaser-consumer facilities, even if segregation of the different grades of diesel fuel has been maintained in the distribution system. Thus, certain downstream compliance and enforcement provisions of the rule are aimed at both preventing contamination of highway diesel fuels with fuels containing higher levels of sulfur, and preventing misfueling of motor vehicles with high sulfur fuels.

Similarly, it is imperative that all parties in the distribution system avoid contamination of 15 ppm highway diesel fuel with 500 ppm highway diesel fuel. Thus, the final rule has adopted a requirement for product

[208] The NPRM preamble suggested a possible reproducibility level of 4 ppm.

[209] Once motor vehicle diesel fuel is moved from the tank in which it was blended at the refinery (and which the refiner's designation of the fuel as meeting the 15 ppm standard was based), the two ppm adjustment applies.

[24] Under the temporary compliance option, for the period from January 1, 2010 through May 31, 2010, refiners can produce 500 ppm fuel only through the use of credits.

EXHIBIT J

transfer documents accompanying deliveries of motor vehicle diesel fuel diesel fuel to identify the sulfur standard it meets and its allowed use. All parties in the distribution system face liability if highway diesel fuel is contaminated such that it fails to meet the applicable standard.

We are also adopting provisions designed to discourage the downgrading of 15 ppm diesel to 500 ppm diesel in the distribution system during the initial years of the program when the optional compliance provision is in effect. Our concern is that if 15 ppm diesel is routinely downgraded and sold as 500 ppm fuel, this practice could lead to availability problems (*i.e.,* risk of 15 ppm not being widely available across the country). We fully recognize that some amount of 15 ppm downgrading will be necessary where the 15 ppm fuel becomes contaminated in the distribution system (*e.g.,* pipeline interfaces). In fact, one advantage of the temporary compliance option is that if 15 ppm fuel becomes contaminated, it can still be sold as highway fuel (downgraded to 500 ppm fuel), rather than downgrading it to off-highway fuel. However, we also recognize that there is the potential for parties in the distribution system to intentionally mix 15 ppm product with 500 ppm fuel, and still sell the product as 500 ppm fuel. While we don't expect this practice to be widespread, it could occur, especially where there is only a small price differential between the two fuels.

Therefore, we are restricting the volume of 15 ppm fuel that can be downgraded to 500 ppm highway diesel fuel at each point in the distribution system (downstream of the refinery gate) to not more than 20 percent on an annual basis. Each party in the distribution system subject to this provision will be required to meet this requirement separately, based on the amount of 15 ppm fuel it receives and transfers/sells to the next party (or end user, in the case of retailers and wholesale purchaser-consumers) on an annual basis. We believe that this limit will be more than sufficient to allow for some downgrading for any contamination that may occur, while still being restrictive enough to discourage downgrading and commingling of 15 ppm fuel with 500 ppm fuel. These provisions will be in effect through May 31, 2010.

We recognize that, in some parts of the country, highway-grade diesel fuel is commonly sold into off-highway markets, due to limitations in the distribution system for carrying one grade of diesel. We do not want to preclude this practice in the future; thus, we are not preventing 15 ppm diesel from being downgraded to off-highway fuel. The downgrading restriction applies only to 15 ppm downgraded to 500 ppm highway diesel fuel. We do not anticipate increased instances of downgrading to off-highway diesel fuel relative to today, given the increase in the price differential between highway diesel and off-highway diesel fuel that will likely result from this program. Therefore, we do not believe it is necessary to impose a regulatory restriction on downgrading of 15 ppm highway diesel to off-highway diesel.

All parties in the distribution system downstream of the refinery gate are subject to this provision, except for those retailers that offer for sale and wholesale purchaser-consumers that use 15 ppm fuel (either as the only grade of diesel or in addition to 500 ppm diesel). In other words, the only retailers and wholesale purchaser-consumers that are subject to this requirement are those that offer for sale or use only 500 ppm diesel (but not 15 ppm diesel).

Since all parties in the distribution system are required by other provisions in this final rule to maintain product transfer documents, which will indicate whether the diesel fuel meets the 15 ppm or 500 ppm standard as well as the volume of such fuel, we are not requiring new recordkeeping requirements beyond these to demonstrate compliance with these provisions. The parties will merely have to ensure that at the end of each year during the period the temporary compliance option is in effect that they comply with the 20 percent requirement based on the incoming and outgoing PTD records described in Section VII.E.5 below.

c. Diesel Fuel Pump Labeling

As discussed in Section IV.A.2 above and in the Chapter IV of the RIA, we believe that clear information about the proper fuel to use and the consequences of misfueling will minimize the potential for misfueling of new-technology vehicles. Under our final fuel program approximately 75% of the fuel in each PADD will meet the 15 ppm standard during the first few years. We believe that this will ensure that the fuel will be widely available in every part of the United States. Moreover, within four years all highway diesel fuel will meet this standard. Under these circumstances we believe the potential for misfueling will be limited. Nevertheless, we did receive considerable comment expressing concerns over the potential for misfueling.

In addition to the required labels on diesel fuel pumps described below, we believe that the use of unique nozzles, color-coded scuffguards, or dyes to distinguish the grades of diesel fuel may be useful in preventing accidental misfueling. While we are not finalizing any requirements today, we will plan to work with the vehicle manufacturers and representatives of the fuel industry and other interested stakeholders over the next several years to develop workable solutions that are consistent with current industry practices and other regulatory requirements.

For any multiple-fuel program like the temporary compliance option adopted today, clearly labeling diesel fuel pumps is vital for end users to distinguish between the two grades of fuel. We received comments on the NPRM that concurred with our assessment in the proposal that pump labels, in conjunction with vehicle labels, would also have the effect of helping to help prevent misfueling of motor vehicles with high sulfur diesel fuel. Section VI.G. above describes the labels that manufactures will place on vehicle and information that will be provided to vehicle owners. Today's rule also adopts pump labeling requirements for retailers and wholesale purchaser-consumers similar to those we proposed, but with modifications to account for the availability of diesel fuel subject to the 500 ppm sulfur standard for use in pre-2007 motor vehicles. The text of the labels appears below; the specific requirements for label size and appearance are found in the regulatory language for this rule.

For pumps dispensing 15 ppm diesel fuel, the label will read as follows:

LOW-SULFUR DIESEL FUEL

Recommended for use in all diesel highway vehicles.

Required for model year 2007 and later highway vehicles.

For pumps dispensing 500 ppm diesel fuel the label will reads as follows:

HIGH-SULFUR DIESEL FUEL—WARNING

May damage model year 2007 and later highway vehicles.

Federal Law *prohibits* use in these vehicles.

Finally, for pumps dispensing nonroad diesel fuel that are located at the same retail outlet as highway diesel fuel pumps, the label will read as follows:

NONROAD DIESEL FUEL—WARNING

May damage highway vehicles.

Federal Law *prohibits* use in any highway vehicle.

EXHIBIT J

3. Use of Used Motor Oil in New Diesel Vehicles

We understand that used motor oil is sometimes disposed of by blending it with diesel fuel for use as fuel in diesel vehicles. Such practices range from blending used motor oil directly into the vehicle fuel tank, to blending it into the fuel storage tanks, to blending small amounts of motor oil from the vehicle crank case into the fuel system as the vehicle is being operated. To the extent such practices could cause vehicles to exceed their emissions standards, the person blending the oil, or causing or permitting such blending, could be considered to be rendering emission controls inoperative in violation of Section 203 of the CAA and potentially liable for a civil penalty (Section 203(a)(3) of the Act, 42 U.S.C. 7522(a)(3)).

Since current formulations of motor oil contain very high levels of sulfur, the addition of used oil to highway diesel fuel could substantially impair the sulfur-sensitive emissions control equipment expected to be used by engine manufacturers to meet the emissions standards in today's rule. Depending on how the oil is blended, it could increase the sulfur content of the fuel burned in the vehicle by as much as 200 ppm. As a result, we believe blending used oil into highway diesel fuel could render inoperative the emission control technology on the vehicle and potentially cause driveability problems.

Therefore, today's rule prohibits any person from introducing or causing or allowing the introduction of used motor oil, or diesel fuel containing used motor oil, into the fuel delivery systems of vehicles manufactured in model year 2007 and later. The only exception to this is where the engine is explicitly certified to the emission standard with oil added and the oil is added in a manner consistent with the certification. Please refer to the Response to Comments document for a discussion of concerns raised by commenters on this issue.

4. Use of Kerosene in Diesel Fuel

As we discussed in the NPRM, kerosene is commonly added to highway diesel fuel to reduce fuel viscosity in cold weather. Today's rule will not limit this practice. Consistent with the proposal, under today's rule, kerosene that is used, intended for use, or made available for use as or for blending with 15 ppm sulfur highway diesel fuel is itself required to be classified as ''motor vehicle diesel fuel'' and meet the 15 ppm standard, as well as the standards for aromatics and cetane (see Section 80.2(y) of the regulatory language following this preamble). This classification for highway fuel use may be made by the fuel's refiner or may be made by a downstream party at the point when that party chooses to use the kerosene in its possession for highway fuel use.

To help ensure that only distillates that comply with the 15 ppm highway diesel fuel standard are blended into 15 ppm highway diesel fuel, today's rule has adopted the proposed requirement that kerosene meeting the 15 ppm standard and distributed by the transferring party for use in motor vehicles, must be accompanied by PTDs accurately stating that the product meets the 15 ppm sulfur standard (See Section VII.E.5. below).

As a general matter, any party who blends kerosene, or any blendstock, into motor vehicle diesel fuel, or who produces motor vehicle diesel fuel by mixing blendstocks, is a refiner and would be subject the requirements and prohibitions applicable to refiners under the rule. However, under today's rule, in deference to the longstanding and widespread practice of blending kerosene into diesel fuel at downstream locations, downstream parties who only blend kerosene into motor vehicle diesel fuel will not be subject to the requirements applicable to refiners, provided that they do not alter the fuel in any other way. Further, downstream parties choosing to blend kerosene into 15 ppm highway diesel fuel will be entitled to the 2 ppm adjustment factor for both the kerosene and the diesel fuel into which it is blended at downstream locations, provided that the kerosene had been transferred to the party with a PTD indicating compliance with that standard. Sulfur test results from downstream locations of parties who do not have such a PTD for their kerosene will not be subject to this adjustment factor, either for the kerosene itself, or for the highway diesel fuel into which it is blended.

In order to ensure the continued compliance of 15 ppm fuel with the 15 ppm standard, downstream parties choosing to blend kerosene into 15 ppm highway diesel fuel are required by the final rule to either have a PTD for that kerosene indicating compliance with the 15 ppm standard, or to have test results for the kerosene establishing such compliance.

Any party who causes the sulfur level of 15 ppm highway diesel fuel to exceed 15 ppm by blending kerosene into highway diesel fuel, or by using high sulfur kerosene as highway diesel fuel, would be subject to liability for violating the sulfur standard. Similarly, parties who cause the sulfur level of 500 ppm highway diesel fuel to exceed that standard by blending kerosene into the fuel, would also be subject to liability.

The rule does not require refiners or importers of kerosene to produce or import kerosene meeting the 15 ppm sulfur standard. However, we believe that refiners will produce low sulfur kerosene in the same refinery processes that they use to produce low sulfur highway diesel fuel, and that the market will drive supply of low sulfur kerosene for those areas where, and during those seasons when, the product is needed for blending with highway diesel fuel. Comments to the NPRM regarding this provision generally supported this approach.

5. Use of Diesel Fuel Additives

Diesel fuel additives include corrosion inhibitors, cold-operability improvers, and static dissipaters. Use of such additives is distinguished from the use of kerosene by the low concentrations at which they are used and their relatively more complex chemistry.[211] We proposed that diesel fuel additives used in highway diesel fuel meet the same cap on sulfur content required for the fuel itself. Additive manufacturers commented [212] that there was no need to impose a 15 ppm sulfur cap on such additives in order to effectively limit the sulfur content of finished diesel fuel. They asserted that imposing such a cap would result in unjustified costs and disruptions to the producers and users of diesel additives. Additive manufacturers also stated that for certain additives, such as static dissipaters needed to prevent explosion hazards at terminal facilities, there are currently no effective alternatives that comply with a 15 ppm cap on sulfur content.

Additive manufacturers suggested an approach whereby shipments of additives that have a sulfur content above 15 ppm would be accompanied by a product transfer document (PTD) that includes information on additive sulfur content, maximum recommended treatment rate, and the potential impact

[211] Diesel fuel additives are used at concentrations commonly expressed in parts per million. Diesel fuel additives can include specially-formulated polymers and other complex chemical components. Kerosene is used at much higher concentrations, expressed in volume percent. Unlike diesel fuel additives, kerosene is a narrow distillation fraction of the range of hydrocarbons normally contained in diesel fuel. See Section VII.C.4 above regarding the requirements associated with the addition of kerosene to diesel fuel.

[212] See comments of the American Chemistry Council, Docket Item IV–D–183 in Docket A–99–06 associated with this rule.

EXHIBIT J

on the sulfur content of the fuel when the additive is used at the maximum recommended treatment rate. Under such an approach, they suggested that the use of diesel additives should be permitted to result in an increase in the sulfur content of the finished fuel of less than 0.5 ppm, such that fuel would effectively be required to meet a sulfur cap of 15.5 ppm.

In response to these comments, we are allowing the use of diesel fuel additives with a sulfur content greater than 15 ppm. However, we believe that this can be accomplished without allowing the 15 ppm cap on fuel sulfur content to be exceeded. The 15 ppm cap is based on our understanding of the level that is necessary to ensure the durability and proper operation of the emissions control hardware that will be used to comply with the emissions standards in today's rule. We believe that it is most appropriate for the market to determine how best to accommodate increases in the fuel sulfur content from the refinery gate to the end user, while maintaining the 15 ppm cap, and whether such increases result from contamination in the distribution system or diesel additive use. By providing this flexibility, we anticipate that market forces will encourage an optimal balance between the competing demands of manufacturing fuel lower than the 15 ppm sulfur cap, limiting contamination in the distribution system, and limiting the additive contribution to fuel sulfur content.

Our review of data submitted by additive and fuel manufacturers to comply with EPA's Fuel and Fuel Additive Registration requirements (40 CFR Part 79) indicates that additives to meet every purpose (including static dissipation) are currently in common use which meet a 15 ppm cap on sulfur content (see Chapter IV.D. of the RIA for more information on additives). Since such low-sulfur additives are currently in use side-by-side with high-sulfur additives, it is reasonable to conclude that there is not a significant difference in their cost. Even if not yet available for certain purposes, we believe that it is reasonable to assume that low-sulfur additives will become available before this rule is implemented in 2006. The ability of industry to provide low-sulfur additives is supported by the fact that diesel fuel meeting a 10 ppm cap on sulfur content has been marketed in Sweden for some time, and ARCO Petroleum recently began marketing fuel meeting a 15 ppm sulfur cap in California.

The unusually high sulfur content of a few additives may discourage their use in diesel fuel that meets a 15 ppm sulfur cap. However, it will generally continue to be possible for additive manufacturers to market additives that contain greater than 15 ppm sulfur for use in highway diesel fuel. Such additives can also continue to be used in nonroad diesel fuel. Additive manufacturers that market such additives and blenders that use them in highway diesel fuel will have additional requirements to ensure that the 15 ppm sulfur cap on highway diesel fuel is not exceeded. Although today's rule may encourage the gradual retirement of additives that do not meet a 15 ppm sulfur cap for use in highway diesel fuel, we do not anticipate that this will result in disruption to additive users and producers or a significant increase in cost. Additive manufactures commonly reformulate their additives on a periodic basis as a result of competitive pressures. We anticipate that any reformulation that might need to occur to meet a 15 ppm sulfur cap will be substantially accommodated within this normal cycle.

Today's rule limits the continued use in highway diesel fuel of diesel fuel additives that exceed 15 ppm sulfur to additives that are used at concentrations of less than one volume percent. We believe that this limitation is appropriate and will not cause any undue burden because the diesel fuel additives for which this flexibility was included are always used today at concentrations well below one volume percent. Further, one volume percent is the threshold above which the blender of an additive becomes subject to all the requirements applicable to a refiner (40 CFR 79.2(d)(1).

The specific requirements in today's rule regarding the use of diesel fuel additives are as follows:

—Additives that have a sulfur content at or below 15 ppm must be accompanied by a PTD that states: ''The sulfur content of this additive does not exceed 15 ppm.''

—Additives that exceed 15 ppm sulfur may continue to be used in highway diesel fuel provided that they are used at a concentration of less than one volume percent and their transfer is accompanied by a PTD that lists the following:

(1) The additive's maximum sulfur concentration

(2) The maximum recommended concentration for use of the additive in diesel fuel, and

(3) The contribution to the sulfur level of the fuel that would result if the additive is used at the maximum recommended concentration.

Blenders of additives that exceed 15 ppm in sulfur content will be held liable if their actions cause the sulfur content of the finished fuel to exceed 15 ppm. In some cases, blenders may not find it feasible to conduct testing, or otherwise obtain information on the sulfur content of the fuel either before or after additive blending, without incurring substantial cost. We anticipate that blenders will manage the risk associated with the use of additives above 15 ppm in sulfur content under such circumstances with actions such as the following:

—Selecting an additive with minimal sulfur content above 15 ppm that is used at a low concentration, and

—Working with their upstream suppliers to provide fuel of sufficiently low sulfur content to accommodate the small increase in sulfur content which results from the use of the additive.

This is similar to the way distributors will manage contamination from their distribution hardware (tank trucks, etc.). Distributors will not necessarily test for fuel sulfur content after each opportunity for contamination, but rather will rely on mechanisms set up to minimize the contamination, and to obtain fuel sufficiently below the standard to accommodate the increase in sulfur content from the contamination.

The recordkeeping, reporting, and PTD provisions associated with these requirements are discussed in Section VII.E below. The liability provisions are discussed in Section VII.G below.

D. What Are the Testing and Sampling Methods and Requirements?

1. Diesel Fuel Testing Requirements and Test Methods

As part of the diesel fuel sulfur program adopted today, EPA is designating the test method that we will use in determining compliance for samples collected at all points in the distribution system. This designated method is called ''Test Method for Total Sulfur in Liquid Aromatic Hydrocarbons and Their Derivatives by Oxidative Combustion and Electrochemical Detection,'' or ASTM D 6428–99.

In the notice of proposed rulemaking, we proposed to designate ASTM D 2622–98 with minor modifications as the designated test method for quantifying the sulfur content of diesel fuel. This designated test method would be the one that EPA would utilize in its own laboratory in order to determine whether a given sample taken at any point in the distribution system is in compliance with the appropriate diesel sulfur standard or not. We proposed to apply this designated test method not

EXHIBIT J

just to this final rule, which will be effective in 2006, but also to the existing diesel sulfur requirements, which are currently in effect. The modifications were designed to ensure appropriate precision at low sulfur levels below 15 ppm. Specifically, the modifications consisted of substitution of a measurement blank that more closely resembles the boiling point range and density of diesel fuel and a change to the calibration line to ensure that it goes through zero.[213]

We received several comments related to the proposed test method. Some parties suggested further modifications to ASTM D 2622–98 and others recommended that we select ASTM D 5453–00 entitled, ''Standard Test Method for Determination of Total Sulfur in Light Hydrocarbons, Motor Fuels and Oils by Ultraviolet Fluorescence'' as the designated test method in the regulation. We have considered the comments carefully and agree that it is desirable to choose an accepted ASTM method as our designated test method. However, we do not believe that ASTM D 5453 is capable of measuring all sulfur containing compounds. Specifically, we do not believe that it will measure sulfonates, which are found in certain diesel additives typically added at terminals. Because of the stringent 15 ppm sulfur standard adopted today, the sulfonate compounds in these additives may become significant contributors to the overall sulfur level of the fuel.

Under this final rule, there is no requirement for every-batch testing for refiners or importers. However, because the diesel sulfur standard will be enforced at all points in the fuel distribution system, we believe that refiners and importers will engage in such testing, because satisfactory test results may be used to form the basis for an affirmative defense in the event of a violation. Downstream fuel suppliers such as truck loading terminals that blend additives to highway diesel fuel may not find it practical to engage in testing every time they blend additives into diesel fuel. As described in the previous section, manufacturers of fuel additives will be required to provide appropriate information about how to blend the additive properly (the treatment rate) and will be required to retain samples of additive batches for the prescribed time period in order to demonstrate compliance with this regulation, as discussed in the previous section.

We believe that there is more than one test method that may be used to determine the sulfur content of diesel fuel at low levels and believe that it is appropriate to allow alternative analytical test methods as long as they are correlated to the designated test method to be used by EPA. The ASTM methods that are allowed as alternative test methods under this rule are ASTM D 3120–96, ''Standard Test Method for Trace Quantities of Sulfur in Light Liquid Petroleum Hydrocarbons by Oxidative Microcoulometry.'' and ASTM D 4045–99, ''Standard Test Method for Sulfur in Petroleum Products by Hydrogenolysis and Rateometric Colorimetry.'' Furthermore, we will allow the use of the modified form of ASTM D 2622, which was proposed to be the designated test method, as an alternative test method. As stated above, results from the use of all alternative analytical test methods must be correlated to the designated test method.

We believe that choosing an appropriate ASTM method as our designated test method for enforcement testing purposes and allowing the use of these alternative test methods furthers the purposes of the ''National Technology Transfer and Advancement Act of 1995'' (NTTAA), section 12(d) of Public Law 104–113, and Office of Management and Budget (OMB) Circular A–119. Both of these documents are designed to encourage the adoption of standards developed by ''voluntary consensus bodies'' and to reduce reliance on government-unique standards where such consensus standards would suffice. In the future, we plan to adopt a performance based test method approach that would address the use of these alternative methods, including ''in-house'' test methods developed by individual refiners and importers. We also intend to continue working with the industry and ASTM in the future to develop and improve sulfur test methods, and will consider modifications to today's rule as developments warrant.

We also received comments indicating that there would not be any field test equipment for 15 ppm diesel fuel available by 2006. With regard to field testing, we believe that the technology that will enable the development of appropriate equipment or modifications to existing equipment exists or will be developed in response to the requirements of this rule.

In the NPRM, we discussed a comment received in response to the ANPRM that ASTM D 2622–98 may not be suitable for determining the sulfur content of biodiesel fuel, or mixtures of biodiesel and conventional diesel fuel. In response to the NPRM, we received comment indicating that significant modifications would be required to ASTM D 2622–98 in order to adapt it for use with biodiesel and biodiesel blends. We believe the selected method, ASTM D 6428–99, is appropriate for use with biodiesel and biodiesel blends. However, depending on the product, any of the test methods allowed by this rule may require some adaptation by the operator.

The test method for determination of sulfur in motor oil is ASTM D 4297–96, entitled, ''Standard Test Methods for Elemental Analysis of Lubricant and Additive Components—Barium, Calcium, Phosphorus, Sulfur, and Zinc by Wavelength-Dispersive Fluorescence Spectroscopy.'' This method uses the same apparatus as ASTM D 2622–98, but includes specific methodology to compensate for interferences caused by additives present in motor oil. Consistent with the goals of the NTTAA and OMB Circular A–119, and in order to provide greater flexibility for regulated parties, we recognize that ASTM D 5453–00 may be selected by regulated parties as an appropriate alternative analytical test method for the purpose of measuring sulfur in motor oil.

2. Diesel Fuel Sampling Methods

The final rule adopts the proposed sampling methods. There were no negative comments regarding these technical changes. The requirement to use these methods is effective June 1, 2001. These same methods were adopted for use in the Tier 2/Gasoline Sulfur rule.31[214] These sampling methods are ASTM D 4057–95 (manual sampling) and D 4177–95 (automatic sampling from pipelines/in-line blending). We are requiring the use of these ASTM methods instead of the methods currently provided in 40 CFR part 80, Appendix G, for determining compliance under both the new 15 ppm sulfur standard, and the 500 ppm standard currently in place. That is because these methods have been updated by ASTM, and the updates have provided clarification and have eliminated certain requirements that are not necessary for sampling petroleum products such as diesel fuel.

[213] For a detailed description of the proposed modifications to ASTM D 2622–98, see 65 FR 35530–35531 (June 2, 2000).

[214] 65 FR 6833–34 (Feb. 10, 2000). These methods are also proposed for use under the RFG and CG rules. See 62 FR 37337 *et seq.* (July 11, 1997).

EXHIBIT J

E. What Are the Recordkeeping, Reporting and Product Transfer Document Requirements?

1. Registration of Refiners and Importers

a. All Refiners and Importers

By December 31, 2001, refiners and importers that may produce or supply highway diesel fuel by 2006 must register with EPA. Specifically, refiners and importers that are either currently producing or supplying highway diesel fuel, or that expect to do so by June 1, 2006, must register. The registration must include the following information:

—Corporate name and address of the refiner or importer and any parent companies and a contact person
—Name and address of all refineries or import facilities (including, for importers, the port of entry and PADD)
—A contact person.
—Location of records
—Business activity (refiner or importer)
—Capacity of each refinery in barrels of crude oil per calendar day

b. Prospective Small Refiners

In addition to the basic registration requirements above, a refiner seeking status as a small refiner needs to apply for this status as a part of their registration and provide the average number of employees for all pay periods from January 1, 1999 to January 1, 2000, for the company, all parent companies, and all subsidiaries or joint ventures. The application also must include which small refiner option the refiner expects to use at each of its refineries.

c. Refiners Seeking an Extension of the GPA Gasoline Sulfur Standards

In addition to the basic registration requirements above, a refiner or importer seeking an extension of the special GPA gasoline sulfur standards (see Section IV.B above) must apply for such an extension in their registration.

2. Pre-Compliance Reports

a. All Refiners

As discussed in Section IV above, by June 1, 2003, all refiners and importers must report to EPA on their progress toward compliance with the highway diesel fuel sulfur standards adopted today. Subsequently, these pre-compliance reports are also due on June 1 of 2004 and 2005. EPA will maintain the confidentiality of information submitted in pre-compliance reports. We will present generalized data from the reports on a PADD basis in annual reports following the receipt of each year's pre-compliance reports. These reports are for information purposes only and, while refiners must truthfully report on their projected plans in order for this provision to have any value, we will not hold refiners liable if their actual actions deviate from these reports. We fully expect that refiners' plans may change, which is why we are requiring these reports to be updated annually through 2005.

In their pre-compliance reports, refiners and importers need to include the following information:

—Any changes in their basic corporate or facility information since registration.
—Estimates of the volumes (in gallons) of 15 ppm fuel and, if applicable, 500 ppm fuel to be produced from crude oil in each refinery, as well as the volumes of each grade of highway diesel fuel produced from other sources.
—For entities expecting to participate in the credit program, estimates of numbers of credits to be earned and/or used.
—Information regarding engineering plans (e.g., design and construction), the status of obtaining any necessary permits, and capital commitments for making the necessary modifications to produce low sulfur highway diesel fuel, and actual construction progress. The pre-compliance reports due in 2004 an 2005 must provide an update of the progress in each of these areas.

b. Small Refiners

In addition to the information required for all refiners above, small refiners must provide additional information in their pre-compliance reports. The information required varies according to which small refiner option the refiner plans to use, as discussed in Section IV.C above. The following paragraphs summarize the supplementary information required for each small refiner option.

500 ppm Option

The pre-compliance report for a refiner planning use the 500 ppm Option must make a showing that sufficient sources of 15 ppm fuel will likely exist in the area. If after 2003 the sources of 15 ppm fuel decrease, the pre-compliance reports for 2004 and/or 2005 must identify this change and must include a supplementary showing that the sources of 15 ppm fuel are still sufficient.

Small Refiner Credit Option

Pre-compliance reporting for small refiners choosing this Small Refiner Credit option is identical to that for the 500 ppm option (that is, if the small refiner is also producing 500 ppm highway diesel fuel), with the additional requirement that the refiner also report on any credits it expects to generate and sell.

Diesel/Gasoline Compliance Date Option

Pre-compliance reports from any small refiners expecting to use the Diesel/Gasoline Compliance Date Option must provide information showing that diesel desulfurization plans are on track. In addition to the information about the expansion of desulfurization capacity required above for all refiners, the pre-compliance reports for small refiners expecting to use this option need to reasonably show that the refiner will be in a position by June 1, 2006 to produce of 100 percent of the refiners highway diesel fuel at 15 ppm sulfur at a volume at least 85 percent of its baseline highway diesel volume.

c. GPA Refiners

As with small refiners expecting to use the Diesel/Gasoline Compliance Option above, pre-compliance report from any refiners or importers expecting to use the extension of the GPA gasoline sulfur standards must provide information showing that diesel desulfurization plans are on track. In addition to the information about the expansion of desulfurization capacity required above for all refiners, the pre-compliance reports for prospective GPA refiners need to reasonably show that the refiner will be in a position by June 1, 2006 to produce of 100 percent of the refiners highway diesel fuel at 15 ppm sulfur at a volume at least 85 percent of its baseline highway diesel volume.

3. Annual Compliance Reports

a. All Refiners

After the highway diesel sulfur requirements begin June 1, 2006, refiners and importers will be required to submit annual compliance reports that demonstrate compliance with the requirements of this final rule. The first annual compliance report will be due by the end of February 2007 (for the period of June 1, 2006 through December 31, 2006) and would be required annually through February 2011. A refiner's annual compliance reports must include the following information, for each refinery:

—The volumes of 15 ppm and 500 ppm sulfur highway diesel fuel produced from crude oil during the compliance period, as well as the volumes of each grade of highway diesel fuel produced from other sources.

EXHIBIT J

—The number of credits, if any, used to demonstrate compliance with the 80 percent requirement for 15 ppm sulfur fuel, and their source(s).
—The number of credits, if any generated.

b. Small Refiners

As with pre-compliance reports, small refiners must supply additional information related to the small refiner option they are using in their annual compliance reports.

500 ppm Option and Small Refiner Credit Option

In their annual compliance reports, small refiners choosing the 500 ppm Option or the Small Refiner Credit Option need to show that the volume they produce of highway diesel fuel meeting the 500 ppm sulfur standard meets the lesser of the following values: (1) 105 percent of the average highway diesel volume it produced in calendar years 1998 and 1999 or (2) the average highway diesel volume it produced from crude oil in calendar years 2004 and 2005.

Diesel/Gasoline Compliance Date Option

A small refiner using this option needs to confirm in each annual compliance report that it continues to produce 100 percent of its highway diesel fuel at 15 ppm sulfur and that its highway diesel volume continues to be at least 85 percent of its baseline volume.

4. Initial Confirmation of 15 ppm Fuel Production

Small refiners using the Diesel/Gasoline Compliance Date Option and refiners using the extension of the GPA gasoline sulfur standard must confirm to EPA by July 1, 2006 that they began on June 1, 2006 producing 100 percent of their highway diesel fuel at 15 ppm sulfur.

5. Product Transfer Documents (PTDs)

a. Diesel Fuel

We are adopting the proposed requirements that refiners and importers provide information on commercial PTDs that identifies diesel fuel distributed for use in motor vehicles and that states the fuel complies with the 15 ppm sulfur standard. Since today's rule adopts provisions for production and sale of diesel fuel having a sulfur content of 500 ppm for use in pre-2007 model year vehicles, the rule also adopts provisions requiring PTDs to identify such fuel and state that its use in motor vehicles is limited to pre-2007 motor vehicles.[215] We believe this additional information on commercial PTDs is necessary because of the importance of preventing commingling of highway diesel fuel with high sulfur distillate products, avoiding contamination of 15 ppm highway diesel fuel with 500 ppm highway diesel fuel, and preventing misfueling of model year 2007 and later vehicles with any fuel having a sulfur content greater than 15 ppm. In addition, we are requiring that each PTD include the volume of fuel delivered (for each grade, 15 ppm and 500 ppm), that is necessary to demonstrate compliance with the fuel downgrading restrictions discussed in Section VII.C.2.b above.

Except for transfers to truck carriers, retailers and wholesale purchaser-consumers, product codes may be used to convey the information. More explicit language on PTDs to these parties is necessary since employees of such parties are less likely to be aware of the meaning of product codes. PTDs are not required for transfers of product into motor vehicles at retail outlets or wholesale purchaser-consumer facilities.

To assure that downstream parties can determine whether kerosene, or other distillates, distributed for use for blending into highway diesel fuel to reduce viscosity in cold weather meets the 15 ppm sulfur standard, today's rule adopts the proposed requirement for PTD identification of distillates distributed for such use as meeting the 15 ppm standard.

Today's rule adopts the proposal to retain the current diesel rule's PTD requirement regarding the identification of dyed, tax-exempt highway diesel fuel. This provision is useful for wholesale purchaser-consumers that need to know that the diesel fuel they purchase is appropriate for tax exempt motor vehicle use despite the presence of red dye.[216]

b. Additives

The NPRM proposed that PTDs for additives for use in highway diesel fuel would be required to state that the additive complies with the 15 ppm sulfur standard. Today's rule has been modified to allow the sale of additives, for use by fuel terminals or other parties in the diesel fuel distribution system, that have a sulfur content greater than 15 ppm under specified conditions. As a result, under today's rule the PTD provisions for such additives are modified as follows:

For additives that have a sulfur content not exceeding 15 ppm, the PTD must state: ''The sulfur content of this additive does not exceed 15 ppm.''

For additives that may have a sulfur content exceeding 15 ppm, the additive manufacturer's PTD, and PTDs accompanying all subsequent transfers, must provide: a warning that the additive's sulfur content exceeds 15 ppm; the maximum sulfur content of the additive; the appropriate amount of additive to blend to highway diesel fuel, stated as gallon of additive per gallon of diesel fuel; and the increase in sulfur concentration of the fuel the additive will cause when used at the specified concentration.

The proposed provisions for consumer additives for use in diesel motor vehicles are slightly modified in the final rule due to concerns that additives designed for nonroad engines could accidentally be introduced into motor vehicle engines if they have no label stating appropriate use. Under today's rule consumer additives for use in any diesel engines must be accompanied by information that states that the additive either: complies with the sulfur content requirements for diesel motor vehicles; or that it has a sulfur content exceeding 15 ppm and is not for use in model year 2007 or later motor vehicles. This information is necessary for consumers to determine if an additive is appropriate for diesel motor vehicle use.

6. Recordkeeping Requirements

Refiners that produce (or importers that import) both 500 ppm highway diesel fuel and 15 ppm highway diesel fuel under the temporary compliance option or any hardship program, or that produce only 15 ppm sulfur content diesel fuel and that wish to generate credits (including early credits), must maintain records for each batch of highway diesel fuel produced, of the batch designations and the batch volumes. The refiner must maintain records regarding credit generation, use, transfer, purchase, or termination.

In general, refiners and importers participating in the temporary compliance option or any hardship program must keep records of the following information, as applicable for each refinery (and in the case of foreign refiners, separately by refinery and by PADD of import), or for importers, for each PADD:

—The total volume of highway diesel fuel produced or imported;

[215] Such fuel can also be used in nonroad vehicles, whose fuel is currently unregulated.

[216] The federal tax code requires the use of red dye in both off-highway distillate fuels and in highway diesel fuel sold for tax exempt use.

EXHIBIT J

—The total volume of highway diesel fuel produced or imported meeting the 500 ppm; sulfur standard;
—The total volume of highway diesel fuel produced or imported meeting the 15 ppm sulfur standard;
—For small refiners or GPA refiners using the gasoline sulfur program extensions, a statement of the baseline volume and whether the volume of 15 ppm produced or imported fuel is at least equal to 85 percent of the baseline volume;
—The percentage of highway diesel fuel produced or imported meeting the 15 ppm sulfur standard before inclusion of credits;
—The volume of 15 ppm highway diesel fuel represented by credits;
—The percentage of 15 ppm highway diesel fuel produced or imported that is represented by credits;
—The number of credits in the refinery's or importer's possession at the beginning of the compliance period, separately by early credits and all other credits;
—The number of credits generated during the compliance period;
—The number of credits used, separately by early credits and all other credits;
—If any credits were obtained from or transferred to other parties, for each other party, its name, its EPA refiner or importer registration number, and the number of credits obtained from or transferred to the other party, provided separately for early credits and all other credits;
—The percentage of compliance with the 15 ppm motor vehicle diesel 80 percent volume requirement by use of credits (provided separately for early credits and all other credits);
—The number of credits that will carry over to the next averaging period, provided separately for early credits and all other credits;
—Records regarding test results, including mandatory quality assurance tests; and
—Contracts or other commercial documents that establish each transfer of credits.

Refiners approved for temporary hardship relief due to extreme unforseen circumstances or extreme financial hardship must include certain information in their application for relief. The required information, and the factors we will consider in determining what relief, if any, is appropriate, are discussed in Section IV.B.3. Such refiners will also have reasonable recordkeeping and reporting requirements, which will be fashioned on a case-by-case basis depending on the nature of any temporary waiver approved.

7. Record Retention

Today's rule adopts the NPRM proposal that the retention period for all records required to be kept by the rule is 5 years. This is the same period of time required in other fuels rules, and it coincides with the applicable statute of limitations. We believe that for other reasons, most parties in the distribution system would maintain some or all of these records for this length of time even without the requirement.

This retention period applies to PTDs, records of any test results performed by any regulated party for quality assurance purposes or otherwise, along with supporting documentation such as date of sampling and testing, batch number, tank number, and volume of product. Business records regarding actions taken in response to any violations discovered are also required to be maintained for 5 years.

All records required to be maintained by refiners participating in the temporary compliance option or hardship options (or by importers of diesel fuel produced by a foreign refiner approved for the temporary compliance option or a hardship option), including small refiner and farmer cooperative and GPA options, are also covered by the retention requirement.

F. Are There Any Exemptions From the Highway Diesel Fuel Requirements?

1. Research and Development

Today's rule exempts from the sulfur standards diesel fuel used for research, development and testing purposes (R & D), as was proposed in the NPRM. We recognize that there may be legitimate research programs that require the use of highway diesel fuel with higher sulfur levels than allowed under today's proposed rule. As a result, today's rule contains provisions for obtaining an exemption from the prohibitions for persons distributing, transporting, storing, selling, or dispensing highway diesel fuel that exceeds the standards, where such diesel fuel is necessary to conduct a research, development, or testing program.

Under the rule, parties seeking an R&D exemption are required to submit to EPA an application for exemption that describes the purpose and scope of the program and the reasons that the use of the higher-sulfur diesel fuel is necessary. Upon presentation of the required information, an exemption may be granted at the discretion of the Administrator, with the condition that EPA may withdraw the exemption *ab initio* in the event the Agency determines the exemption is not justified. Fuel subject to this exemption is exempt from the other provisions of today's rule, provided certain requirements are met. These requirements include the segregation of the exempt fuel from non-exempt highway diesel fuel, identification of the exempt fuel on product transfer documents, pump labeling, and where appropriate, the replacement, repair, or removal from service of emission systems damaged by the use of the high sulfur fuel.

2. Racing Vehicles

Today's rule adopts the NPRM proposal to provide no exemption from the sulfur content standard and other requirements of today's rule for diesel fuel used in racing vehicles. In the NPRM, we requested comment on whether such an exemption is needed and we received no comments supporting the need for such exemption. As we stated in the NPRM, we see no advantage for racing vehicles to use fuel having higher sulfur levels (or lower cetane or higher aromatic levels) than are required by today's rule, and we are concerned about the potential for misfueling of motor vehicles that could result from having a high sulfur (*e.g.*, 3,000 ppm) automotive fuel available in the marketplace. Consequently, the rule does not provide an exemption from the highway diesel fuel requirements for vehicles used in racing.

3. Military Fuel

Based on EPA's existing definition of diesel fuel, we previously concluded that JP–8 military fuel is not subject to EPA's existing requirements for diesel fuel. Today's rule revises the definition of diesel fuel so that JP–5 and JP–8 military fuel that is used or intended for use in highway diesel motor vehicles will be subject to all of the requirements applicable to diesel fuel under today's rule.[217] However, today's rule also exempts JP–5 and JP–8 fuels from EPA's diesel fuel requirements if it is used in tactical military vehicles that have a national security exemption or if it is used in tactical military vehicles that are not covered by a national security exemption but for national security reasons, such as the need to be ready for immediate deployment overseas, need to be fueled on the same fuel as motor

[217] Any JP–5, JP–8, or other distillate product that is not designated by the refiner or importer as motor vehicle diesel fuel, and that does not otherwise meet the definition of motor vehicle diesel fuel, would not be included by the refiner or importer in any computation of motor vehicle diesel fuel volume for baseline or other purposes.

EXHIBIT J

vehicles with a national security exemption. Use of JP–5 and JP–8 fuel not meeting the highway diesel fuel standards in a motor vehicle other than the tactical military vehicles described above is prohibited under today's rule.

Due to national security considerations, EPA's existing regulations allow the military to request and receive national security exemptions (NSE) for their motor vehicles from emissions regulations if the operational requirements for such vehicles warrant such an exemption. These provisions have worked successfully in the past to enable us to meet both our national air quality and security goals simultaneously. Today's rule does not change these provisions.

In discussions with the Department of Defense (DOD), DOD stated that certain tactical military vehicles must be ready to be shipped overseas quickly in response to an emergency and must be ready to be fueled on whatever fuel is available under tactical conditions (typically JP–8). To avoid problems experienced in the past when switching between fuel types in tactical vehicles, JP–8 has been selected as the common tactical fuel for use by the military in the U.S. and overseas. Thus, the use of the high sulfur fuel, which is normally supplied overseas under tactical situations, is expected to continue after the implementation of this rule. However, use of the high sulfur fuel in these engines equipped with the aftertreatment technology, necessary to meet the emissions requirements of today's rule could result in engine failure, driveability problems, and permanently destroy the emission control system.

Therefore, it appears that requiring tactical military vehicles that may be used outside of the U.S. to comply with the emissions requirements in today's rule is not compatible with the operational requirements for such vehicles. In their comments on the proposed rule, DOD stated that it would be appropriate for EPA to cover the tactical military vehicles that would otherwise be subject to the emissions regulations in today's rule under a national security exemption. We recognize the national security concerns raised by DOD, and will address this issue using the Agency procedures established for this purpose.[218] These guidelines are contained in EPA's ''Guidelines for National Security Exemptions of Motor Vehicles and Motor Vehicle Engines—Guidelines for Tactical Vehicles/Engines.''

We also recognize that there are tactical military vehicles manufactured before the requirements of today's rule become effective that for national security purposes need to continue to be operated on JP–5 or JP–8 fuel while in the U.S. to facilitate their readiness to be fueled on whatever fuel is available overseas. Consistent with an exemption for certain military vehicles, EPA is also exempting diesel fuel from the sulfur standard in this rule, where the fuel is used in vehicles exempted from the emissions standards in this rule (pursuant to 40 CFR 85.1708) or in tactical motor vehicles that are not covered by a national security exemption but for national security reasons need to be fueled on the same fuel as motor vehicles with a national security exemption. To more clearly identify the tactical motor vehicles to be covered by the diesel fuel exemption the Department of Defense will submit a notification to EPA describing the rationale and supporting data for the request and a description of the covered tactical motor vehicles. The one-time notification should be sent to EPA by December 15, 2003 in order to provide sufficient time for EPA to review the information as well as lead time to the Department of Defense for logistics planning purposes. EPA will then respond to DOD identifying all vehicles that are covered by the fuel exemption. Based on data provided by the Department of Defense to date, EPA believes that providing an exemption for JP–5 and JP–8 fuel used in tactical motor vehicles does not have any significant environmental impact.

G. Liability and Penalty Provisions for Noncompliance

1. General

The liability and penalty provisions of the diesel sulfur rule are similar to the liability and penalty provisions found in the gasoline sulfur rule, RFG rule and other EPA fuels regulations.[219] Regulated parties are subject to prohibitions which are typical in EPA fuels regulations, such as selling or distributing fuel that does not comply with the standard, and causing others to commit prohibited acts. Liability also arises under the diesel rule for prohibited acts specific to the diesel sulfur control program, such as introducing diesel fuel not meeting the 15 ppm sulfur standard into diesel motor vehicles of model year 2007 and later. In addition, parties will be liable for a failure to meet certain requirements, such as the recordkeeping, reporting, or PTD requirements, or causing others to fail to meet such requirements.

Under today's rule, the party in the diesel fuel's distribution system that controls the facility where the violation occurred, and other parties in that fuel's distribution system (such as the refiner, reseller, and distributor), are presumed to be liable for the violation.[220] As in the Tier 2 gasoline sulfur rule (''Tier 2 sulfur rule''), today's diesel sulfur rule explicitly prohibits causing another person to commit a prohibited act or causing non-conforming diesel fuel to be in the distribution system. Non-conforming means: (1) Diesel fuel with sulfur content above 15 ppm incorrectly designated as appropriate for model year 2007 and above motor vehicles or (2) diesel fuel with sulfur content above 500 ppm incorrectly designated as appropriate for any model year motor vehicle. Parties outside the diesel fuel distribution system, such as diesel additive manufacturers and distributors, would also be subject to liability for those diesel rule violations which could have been caused by their conduct.

Affirmative defenses are provided for each party deemed presumptively liable for a violation, and all presumptions of liability are rebuttable. In general, in order to rebut the presumption of liability, parties are required to establish that: (1) The party did not cause the violation; (2) PTD(s) exist which establish that the fuel or diesel additive was in compliance while under the party's control; and (3) the party conducted a quality assurance sampling and testing program. Diesel fuel refiners, diesel fuel additive manufacturers, and blenders of high sulfur additives into diesel fuel, would also be required to provide test results establishing the conformity of the product prior to leaving that party's control.[221] Branded

[218] These guidelines are contained in EPA's ''Guidelines for National Security Exemptions of Motor Vehicles and Motor Vehicle Engines—Guidelines for Tactical Vehicles/Engines''

[219] See section 80.5 (penalties for fuels violations); section 80.23 (liability for lead violations); section 80.28 (liability for volatility violations); section 80.30 (liability for diesel violations); section 80.79 (liability for violation of RFG prohibited acts); section 80.80 (penalties for RFG/CG violations); section 80.395 (liability for gasoline sulfur violations); section 80.405 (penalties for gasoline sulfur regulations).

[220] An additional type of liability, vicarious liability, is also imposed on branded refiners under these fuels programs.

[221] The requirement of conforming test results was not included in the NPRM as an affirmative defense element for the fuel refiner. However, under both the NPRM and today's final rule, refiners need to establish that they didn't cause the violation. As a practical matter, refiners generally establish their lack of causation using such test results. The Agency believes that it is nonetheless important to require these test results as an affirmative defense element for refiners because under today's final rule, refiners are given the

EXHIBIT J

refiners have additional affirmative defense elements to establish. The defenses under the diesel sulfur rule are similar to those available to parties for violations of the RFG, volatility, and the Tier 2 sulfur regulations. Today's final rule also clarifies that parent corporations are liable for violations of subsidiaries, in a manner consistent with the Tier 2 sulfur rule. Finally, the final diesel sulfur rule mirrors the Tier 2 sulfur rule by clarifying that each partner to a joint venture will be jointly and severally liable for the violations at the joint venture facility or by the joint venture operation.

As is the case with the other EPA fuels regulations, today's final diesel sulfur rule applies the provisions of section 211(d)(1) of the Clean Air Act (Act) for the collection of penalties. These penalty provisions subject any person that violates any requirement or prohibition of the diesel sulfur rule to a civil penalty of up to $27,500 for every day of each such violation and the amount of economic benefit or savings resulting from the violation. A violation of a diesel sulfur cap standard constitutes a separate day of violation for each day the diesel fuel giving rise to the violation remains in the fuel's distribution system. Under the regulation, the length of time the diesel fuel in question remains in the distribution system is deemed to be twenty-five days unless there is evidence that the fuel remained in its distribution system a lesser or greater amount of time—the same time presumption that is incorporated in the RFG and Tier 2 sulfur rules. The penalty provisions are similar to the penalty provisions for violations of the RFG and the Tier 2 sulfur regulations.

EPA has included in today's rule two prohibitions for ''causing'' violations: (1) Causing another to commit a violation; and (2) causing non-complying diesel fuel to be in the distribution system. These causation prohibitions are like similar prohibitions included in the Tier 2 gasoline sulfur regulations, and, as discussed in the preamble to that rule, EPA believes they are consistent with EPA's implementation of prior motor vehicle fuel regulations. See the liability discussion in the preamble to the Tier 2 final rule, at 65 FR 6812 et seq.

The prohibition against causing another to commit a violation would apply where one party's violation is caused by the actions of another party. For example, EPA may conduct an inspection of a terminal and discover that the terminal is offering for sale highway diesel fuel designated as complying with the 15 ppm sulfur standard, while it, in fact, had an actual sulfur content greater than the standard.[222] In this scenario, parties in the fuel's distribution system, as well as parties in the distribution system of any diesel additive that had been blended into the fuel, would be presumed liable for causing the terminal to be in violation. Each party, of course, would have the right to present an affirmative defense to rebut this presumption.

The prohibition against causing non-complying diesel fuel to be in the distribution system would apply, for example, if a refiner transfers non-complying diesel fuel to a pipeline. This prohibition could encompass situations where evidence shows high sulfur diesel fuel was transferred from an upstream party in the distribution system, but EPA may not have test results to establish that parties downstream also committed violations with this fuel.

The Agency intends to enforce the liability scheme of the diesel sulfur rule in the same manner that we have enforced the similar liability schemes in our prior fuels regulations. As in other fuels programs, we will attempt to identify the party most responsible for causing the violation in determining that party that should primarily be liable for penalties for the violation.

2. What Is the Liability That Additive Manufacturers and Distributors, and Parties That Blend Additives Into Diesel Fuel, Are Subject To?

a. General

In the NPRM, the Agency did not propose that additive manufacturers or distributors would be presumed liable for any violations of the diesel regulation. Only parties that were in the diesel fuel distribution system were to be presumed liable for diesel fuel violations. Parties in the additive distribution system would only be subject to liability for fuels violations where the Agency established that they caused others (such as fuel distributors or retailers) to be in violation. This approach was followed because the NPRM prohibited the downstream blending into highway diesel fuel of any additive whose sulfur content exceeded the 15 ppm standard. This limitation reduced the potential that the additive could be the cause of sulfur non-compliance in fuel within the diesel distribution system.

Various additive manufacturers provided comments regarding the need for certain diesel fuel additives that may exceed the 15 ppm sulfur standard. Today's final rule, therefore, permits the blending of diesel additives with sulfur content in excess of 15 ppm into 15 ppm highway diesel fuel under limited circumstances, in response to those comments. As more fully discussed in section VII(C)(5) of this preamble, today's rule permits downstream parties to blend into 15 ppm highway diesel fuel additives having a sulfur content exceeding 15 ppm, provided that: (1) The blending of the additive does not cause the diesel fuel's sulfur content to exceed the 15 ppm sulfur standard; (2) the additive is added in an amount no greater than one volume percent of the blended product; and (3) the downstream party obtained from its additive supplier a product transfer document (''PTD'') with the additive's sulfur content and the recommended treatment rate, and that it complied with such treatment rate, as appropriate.

Since the final rule permits the limited use in highway diesel fuel of additives with high sulfur content, the Agency believes it is now more likely that a diesel fuel sulfur violation could be caused by the use of high sulfur additives. This could result from the additive manufacturer's misrepresentation or inaccurate statement of the additive's sulfur content or recommended treat rate on the additive's PTD, or an additive distributor's contamination of low sulfur additives with high sulfur additives during transportation. The increased probability that parties in the additive distribution system could cause a violation of the sulfur standard warrants the imposition by the Agency of increased liability for such parties under the final rule. As one example of this, the final rule explicitly makes parties in the additive distribution system liable for the sale of nonconforming diesel fuel additives, even if such additives have not yet been blended into diesel fuel. In addition, the

ability to produce high sulfur highway diesel fuel as well as low sulfur product. This makes the possibility of refiner causation of violations much more likely, and the production of conforming test results—the one most convincing piece of evidence which would establish the refiner's lack of causation—much more essential. Further, conducting such testing should not be a significant burden for refiners to comply with. Refiners typically already test their batches to assure component quality for commercial reasons, and refiners are usually the party in the distribution system with the most resources—both financial and analytical—to conduct quality testing. In any case, refiners may choose not to conduct this testing, since it is merely an affirmative defense element, and the tests would only become relevant once a violation is discovered.

[222] The violation would occur if EPA's test result showed a sulfur content of greater than 17 ppm, which takes into account the two ppm adjustment factor for testing reproducibility for downstream parties.

EXHIBIT J

final rule imposes presumptive liability on parties in the additive distribution system if diesel fuel into which the additive has been blended is determined to have a sulfur level in excess of its permitted concentration. This presumptive liability differs depending on whether the blended additive was designated as meeting the 15 ppm sulfur standard (a ''15 ppm additive'') or designated as a greater than 15 ppm sulfur additive (a ''high sulfur additive''), as discussed below.

b. Liability When the Additive Is Designated as Complying With the 15 ppm Sulfur Standard

With the sole exception of diesel additives blended into highway diesel fuel at a concentration no greater than one percent by volume of the blended fuel, any additive blended into diesel fuel downstream of the refinery must have a sulfur content no greater than 15 ppm, and must be accompanied by PTD(s) accurately identifying them as complying with the 15 ppm sulfur standard.

All parties in the fuel and additive distribution systems are subject to presumptive liability if the blended fuel exceeds the sulfur standard (with the two ppm downstream adjustment applied when EPA tests the fuel subject to the 15 ppm sulfur standard). Low sulfur additives present a less significant threat to diesel fuel sulfur compliance than would occur with the use of additives designated as possibly exceeding 15 ppm sulfur. Thus, parties in the additive distribution system of the low sulfur additive will be permitted to rebut the presumption of liability by showing the following: (1) Additive distributors will only be required to produce PTDs asserting that the additive complies with the 15 ppm sulfur standard (2) additive manufacturers will also be required to produce PTDs complying in an accurate manner with the regulatory requirements, as well as producing test results (or retained samples on which tests could be run) establishing the additive's compliance with the 15 ppm sulfur standard prior to leaving the manufacturer's control. Once their presumptive liability would be refuted by producing such documentation in a convincing manner, these additive system parties would only be held responsible for the diesel fuel non-conformity in situations in which EPA can establish that the party actually caused the violation.

Under today's final rule, parties in the diesel fuel distribution system will have the typical presumptive liability defenses as proposed. For parties blending an additive into their diesel fuel, the requirement of producing PTDs showing that the product complied with the regulatory standards will necessarily include PTDs for the additive that was used, affirming the additive's compliance as well as the fuel's.

c. Liability When the Additive Is Designated as Having a Possible Sulfur Content Greater Than 15 ppm

Under today's rule, if an additive manufacturer produces an additive for use in 15 ppm highway diesel fuel at a concentration no greater than one volume percent of the blended fuel, then the additive is permitted to have a maximum sulfur content above 15 ppm. However, if highway diesel fuel containing that additive is found by EPA to have high sulfur content, then all the parties in both the additive's and the fuel's distribution chain will be presumed liable for causing the diesel fuel violation. Since this type of high sulfur additive presents a much greater probability of causing diesel fuel non-compliance, parties in the additive's distribution system will have to satisfy an additional element to establish an affirmative defense. In addition to the elements of an affirmative defense described above, parties in the distribution system for such a high sulfur additive must also establish that they did not cause the violation, an element of an affirmative defense that is typically required in EPA fuel programs to rebut presumptive liability.

Parties in the diesel fuel's distribution system will essentially have to establish the same affirmative elements as proposed, with one addition. Blenders of high sulfur additives into 15 ppm sulfur diesel fuel, by the act of blending such an additive into that fuel, subject themselves to the need for establishing a more rigorous quality control program than would exist without the addition of such a high sulfur addition. The Agency believes that parties blending high sulfur additives into their 15 ppm sulfur diesel fuel should be required to produce test results establishing that the blended fuel was in compliance with the 15 ppm sulfur standards after being blended with the high sulfur additive. This additional defense element is required as an added safeguard to ensure diesel fuel compliance, since the blender has voluntarily chosen to use an additive which increases the risk of diesel fuel non-compliance.

H. How Will Compliance With the Sulfur Standards Be Determined?

In the NPRM, EPA proposed that compliance with the diesel sulfur standards would be determined based on the sulfur level of the diesel fuel, as measured using the regulatory testing methodology. We further proposed that any evidence from any source or location could be used to establish the diesel fuel sulfur level, provided that such evidence is relevant to whether the level would have been in compliance if the regulatory sampling and testing methodology had been correctly performed. In today's action, consistent with the approach taken under the Tier 2 sulfur rule, EPA is adopting the proposed regulatory provisions.

The final regulations provide that the primary determinant of compliance with the standards will be the specified regulatory test method.[223] Additionally, other information may be used under the rule, including test results using non-designated test methods, if the evidence is relevant to determining whether the sulfur level would meet applicable standards had compliance been determined using the specified test methodology. Moreover, since evidence other than regulatory test results must be relevant to compliance using the regulation test method, EPA believes that the rule enables parties to rely with confidence on the proper use of the regulatory method.

For example, the Agency might not have sulfur results derived from the regulatory test method for diesel fuel sold by a terminal, yet the terminal's own test results, based on testing using methods other than those specified and approved in the regulations, could reliably show an exceedence of the sulfur standard. Under today's rule, evidence from the non-regulatory test method could be used to establish the diesel fuel's sulfur level that would have resulted if the regulatory test method had been conducted. This type of evidence is available for use by either the EPA or the regulated party, and could be used to show either compliance or noncompliance. Similarly, absent the existence of sulfur test results using the regulation method, commercial documents asserting the sulfur level of diesel fuel or additive could be used as some evidence of that sulfur level if the product would have been tested using the regulatory method.[224]

[223] Under today's final rule, several specified alternative test methods are also permitted, provided they have been properly correlated with the regulatory method.

[224] The ability to use such evidence is in addition to the presumption established under the final rule, that when a mandated product transfer document asserts that diesel fuel complies with the 500 ppm sulfur standard, the fuel accompanied by that transfer document will be presumed to comply with the 500 standard and not to comply with the 15

EXHIBIT J

The Agency believes that the same statutory authority for EPA to adopt the Tier 2 sulfur rule's evidentiary provisions (Clean Air Act section 211(c)), provides appropriate authority for our adoption of the evidentiary provisions of today's diesel rule. For a fuller explanation of this statutory authority, see Section VI(I) of the Tier 2 final rule preamble, 65 FR 6815, February 10, 2000.

VIII. Standards and Fuel For Nonroad Diesel Engines

Although this program covers only highway diesel engines and highway diesel fuel, our potential plans for nonroad diesel engines, and especially the sulfur content of nonroad diesel, fuel are clearly related. For example, depending on whether and how nonroad diesel fuel is regulated, factors including the costs, leadtime, environmental impacts, and impacts on competitive relationships in the marketplace associated with this program could be affected. We would need to address these factors in any future regulatory action on nonroad diesel fuel.

Because of these factors, various stakeholders inquired during the public comment period about the potential requirements that could apply to nonroad diesel fuel. Several states, environmental organizations, and other commenters urged us to take action on nonroad because of the nonroad contribution to air quality problems. The remainder of this section summarizes the background behind this issue and our current thinking about the future regulation of nonroad diesel engines and fuel.

After establishing an initial set of emission standards for nonroad diesel engines in 1994, we proposed in 1997, and finalized in 1998, a comprehensive program of emission standards for most diesel engines designed for nonroad use.[225] This program established NMHC + NO_X and PM standards that are phasing in over the 1999–2006 time frame, with engines of different horsepower ranges coming into the program in different years. At the same time, we set long-term (''Tier 3'') NMHC + NO_X standards, but not PM standards, for medium and high horsepower engines, to begin in 2006. This rule also included a plan to reassess the Tier 3 NMHC + NO_X standards and to establish a PM test cycle and associated standards in the 2001 time frame. In addition, the 1998 rule anticipated an EPA reassessment of the NMHC + NO_X standards for the smaller engines (less than 50 horsepower), which are to be phased in beginning in 2004 (referred to as nonroad ''Tier 2'' standards).

We did not include regulations on nonroad diesel fuel in the first diesel fuel sulfur control program which was established in 1993 for highway diesel fuel. We estimate that the average sulfur content for nonroad diesel fuel is currently around 3000 ppm,[226] as compared to the cap for highway diesel fuel of 500 ppm.[227]

We believe that any specific new requirements for nonroad diesel fuel would need to be carefully considered in the context of a proposal for further nonroad diesel engine emission standards. For the nonroad program, we expect to use the same systems-based approach as we used for the Tier 2/ Gasoline Sulfur program and today's highway diesel fuel and heavy-duty engine standards program. This is because of the close interrelationship between fuels and engines—the best emission control solutions may not come through either fuel changes or engine improvements alone, but perhaps through an appropriate balance between the two. This is especially significant given that engine manufacturers and diesel fuel refiners would need to address potential challenges such as capital cost, leadtime, and engineering and construction resources, of simultaneously meeting the highway standards under this program with the nonroad standards that may be implemented. Thus we need to address issues in both the fuel and engine arenas together.

The many issues connected with any rulemaking for nonroad engines and fuel warrant serious attention, and we believe it would be premature today for us to attempt to raise potential resolutions to them. We plan to initiate action in the future to formulate thoughtful proposals covering both nonroad diesel fuel and engines.

IX. Public Participation

A wide variety of interested parties participated in the rulemaking process that culminates with this final rule. The formal comment period and five public hearings associated with the NPRM provided additional opportunities for public input. EPA also met with a variety of stakeholders, including environmental and public health organizations, oil company representatives, auto company representatives, emission control equipment manufacturers, and states at various points in the process.

We prepared a detailed Response to Comments document that describes the comments received on the NPRM and presents our response to each of these comments. The Response to Comments document is available in the docket for this rule and on the Office of Transportation and Air Quality internet home page. Comments and our responses are also included throughout this preamble for several key issues.

X. Administrative Requirements

A. Administrative Designation and Regulatory Analysis

Under Executive Order 12866 (58 FR 51735, October 4, 1993), the Agency is required to determine whether this regulatory action will be ''significant'' and therefore subject to review by the Office of Management and Budget (OMB) and the requirements of the Executive Order. The order defines a ''significant regulatory action'' as any regulatory action that is likely to result in a rule that may:

- Have an annual effect on the economy of $100 million or more or adversely affect in a material way the economy, a sector of the economy, productivity, competition, jobs, the environment, public health or safety, or State, local, or tribal governments or communities;
- Create a serious inconsistency or otherwise interfere with an action taken or planned by another agency;
- Materially alter the budgetary impact of entitlements, grants, user fees, or loan programs or the rights and obligations of recipients thereof; or,
- Raise novel legal or policy issues arising out of legal mandates, the President's priorities, or the principles set forth in the Executive Order.

Pursuant to the terms of Executive Order 12866, EPA has determined that this rule is a ''significant regulatory action'' because the engine standards, diesel fuel sulfur standards, and other regulatory provisions will have an annual effect on the economy in excess of $100 million. Accordingly, we have prepared a Final Regulatory Impact Analysis (RIA) which is available in the docket for this rulemaking and at the internet address listed under **ADDRESSES** above. This action was submitted to the Office of Management and Budget (OMB) for review as required by Executive Order 12866. Written comments from OMB on today's action

ppm standard, unless the party can establish otherwise.

[225] See the final rule, 63 FR 56968, October 23, 1998 for more about the history of these regulations.

[226] National Institute for Petroleum and Energy Research (NIPER) report, Diesel Fuel Oils, 1996.

[227] Information from recent national fuel surveys by NIPER and the Alliance of Automobile Manufacturers.

EXHIBIT J

and responses from EPA to OMB comments are in the public docket for this rulemaking.

B. Regulatory Flexibility Analysis

EPA has decided to prepare a Final Regulatory Flexibility Analysis in connection with this final rule. For purposes of assessing the impact of today's rule on small entities, small entities are defined as described under section X.B.3 below.

In accordance with section 603 of the RFA, EPA prepared an initial regulatory flexibility analysis (IRFA) for the proposed rule and convened a Small Business Advocacy Review Panel to obtain advice and recommendations of representatives of the regulated small entities in accordance with section 609(b) of the RFA (see 65 FR 35541, June 2, 2000). A detailed discussion of the Panel's advice and recommendations is found in the Panel Report contained in the docket for this rulemaking. A summary of the Panel's recommendations is presented at 65 FR 35541.

We have also prepared a final regulatory flexibility analysis (FRFA) for today's final rule. The FRFA addresses the issues raised by public comments on the IRFA, which was part of the proposal of this rule. The FRFA is available for review in the docket and is summarized below.[228] The key elements of the FRFA include:

—The need for, and objectives of, the rule;
—The significant issues raised by public comments on the Initial RFA, a summary of the Agency's assessment of those issues, and a statement of any changes made to the proposed rule as a result of those comments;
—The types and number of small entities to which the rule will apply;
—The reporting, recordkeeping, and other compliance requirements of the rule, including the classes of small entities that will be affected and the type of professional skills necessary to prepare the report or record;
—The steps taken to minimize the significant impact on small entities consistent with the stated objectives of the applicable statute, including a statement of the factual, policy and legal reasons why the Agency selected the alternatives we did, and why other significant alternatives to the rule which affect the impact on small entities were rejected.

We summarize the key elements of the FRFA below. A fuller discussion of each of these elements can be found in the FRFA (Chapter VIII of the RIA).

1. Need for and Objectives of the Rule

Section I of this preamble provides a summary of the need for and objectives of this rule. As discussed in detail in Section II of this preamble, emissions from heavy-duty vehicles contribute greatly to a number of serious air pollution problems, and would have continued to do so into the future absent further controls to reduce these emissions. Although the air quality problems caused by diesel heavy-duty vehicles are challenging, we believe they can be resolved through the application of high-efficiency emissions control technologies. Based on the Clean Air Act requirements discussed in Section I.B.3, we are setting stringent new emission standards that will result in the use of these diesel exhaust emission control devices (see Section III). We are also finalizing changes to diesel fuel sulfur standards in order to enable these high-efficiency technologies (Section IV). In consideration of the impacts that sulfur has on the efficiency, reliability, and fuel economy impact of diesel engine exhaust emission control devices, we believe that controlling the sulfur content of highway diesel fuel to the 15 ppm level is necessary, feasible and cost effective. The standards will result in substantial benefits to public health and welfare and the environment through significant reductions in emissions of nitrogen oxides, particulate matter, nonmethane hydrocarbons, carbon monoxide, sulfur oxides, and air toxics.

2. Summary of Significant Public Comments on the IRFA

EPA received many comments from small refiners and others pertaining to the options for hardship relief described in the NPRM. In general, many small refiners commented on the financial difficulty their refinery would face in complying with the proposed diesel sulfur program, and encouraged EPA to provide hardship relief. Many small refiners acknowledged that there was not one single hardship relief option to best suit the needs of all small refiners, and thus supported a menu of options. Section IV.C of the preamble discusses the three hardship relief options available to small refiners under today's program. These three options are based on concepts which were considered by the SBAR Panel and on which we requested and received comment in the proposal. A summary of the comments pertaining to regulatory alternatives for small refiners, and our response to them, is contained in the Response to Comments document contained in the docket.

3. Types and Number of Small Entities

Today's program, which establishes new emission standards for heavy-duty engines and new standards for the sulfur content of highway diesel fuel, will directly affect manufacturers of heavy-duty engines and petroleum refiners that produce highway diesel fuel, respectively. In addition, but to a lesser extent, the program will directly affect diesel distributors and marketers.

We have not identified any manufacturers of heavy-duty engines that meet SBA's definition of a small business. However, we have identified several petroleum refiners that produce highway diesel fuel and meet the SBA's definitions for a small business for the industry category. According to the SBA's definition of a small business for a petroleum refining company (Standard Industrial Classification (SIC) 2911), which we have used for purposes of assessing the impact of today's rule on small entities, a company must have 1500 or fewer employees to qualify as an SBA small business. Of the approximately 158 refineries in the U.S. today, we estimate that approximately 24 refiners (owning 27 refineries) would meet the SBA definition and produce highway diesel fuel. We estimate that these 24 refiners produce approximately five percent of highway diesel fuel nationwide.

EPA also has identified several thousand businesses in the diesel distribution and marketing industry that meet SBA's definitions of small business. More information about these industries is contained in the Final RFA. The low sulfur diesel fuel rule contains certain downstream compliance and enforcement provisions, for all parties in the diesel fuel distribution system downstream of the refinery gate, to prevent (1) contamination of highway diesel fuels with fuels containing higher levels of sulfur and (2) misfueling of motor vehicles with high sulfur fuels.

Under this rule, distributors and retailers may choose to handle 500 ppm diesel fuel, 15 ppm diesel fuel, or both (as permitted under the temporary compliance option and small refiner hardship provisions described in the preamble). However, distributors and marketers will have to segregate low sulfur diesel fuel from other distillates just as they do today with 500 ppm diesel fuel. Retailers and wholesale purchaser-consumers will be responsible for ensuring that only low sulfur diesel fuel is sold for use in model year 2007 and later heavy-duty

[228] The Final RFA is contained in Chapter VIII of the RIA.

EXHIBIT J

vehicles. Under the temporary compliance option for refiners and small refiner hardship provisions (described in Section IV), where two grades of highway diesel fuel are allowed for the initial years of the program, some distributors and marketers may voluntarily decide (presumably based on economics) to add tankage or make additional modifications to accommodate two grades of highway diesel fuel. We have taken such costs into account in our diesel fuel cost analysis (described in more detail in Chapter V of the RIA).

The low sulfur diesel fuel rule also includes a product downgrading restriction that is designed to discourage the intentional downgrading of 15 ppm diesel fuel to 500 ppm diesel fuel in the distribution system during the initial years of the program when the optional compliance provision is in effect. This provision and its impacts on affected entities is discussed more in Section VII of this preamble and in the FRFA. This provision does not require any new recordkeeping or reporting requirements beyond those required of the rest of the program.

4. Reporting, Recordkeeping and Other Compliance Requirements

As with all refiners complying with the highway diesel fuel program, small refiners will be subject to registration, pre-compliance reporting, annual compliance reporting, and product transfer document requirements. In addition, the low sulfur diesel fuel program contains several hardship options to assist small refiners in producing low sulfur diesel fuel. Under these options, small refiners may be subject to additional reporting and recordkeeping requirements to help ensure compliance with the options and the integrity of the low sulfur diesel fuel as it moves from the refinery gate to the retail outlet. For example, all refiners producing diesel fuel are required to provide us with basic data on their progress toward compliance in 2003–2005 under the pre-compliance reporting requirements described in Section IV.A. As a part of their pre-compliance reports, small refiners must provide a limited amount of additional information specific to the option they choose. However, we believe the benefits of these hardship options will far outweigh any burdens imposed by their associated recordkeeping and reporting requirements.

The low sulfur diesel fuel program does not impose any new reporting requirements for small diesel marketers or distributors. However, this program does impose new record keeping requirements for such parties, specifically product transfer documents that track transfers of diesel fuel. Such transfer records are currently maintained by most parties for business and/or tax reasons. In addition, the record keeping requirements for downstream parties are fairly consistent with those in place today under other EPA fuel programs, including the current highway diesel fuel program. Therefore, we expect that the new record keeping requirements for downstream parties will not impose a significant burden.

These recordkeeping, reporting and compliance requirements are discussed in more detail in Sections IV and VII of this preamble and in the FRFA.

5. Regulatory Alternatives To Minimize Impact on Small Entities

The Small Business Advocacy Review Panel was convened by EPA on November 12, 1999. The Panel consisted of representatives of the Small Business Administration (SBA), the Office of Management and Budget (OMB) and EPA. During the development of the proposal to this rule, EPA and the Panel were in contact with representatives from the small businesses that will be subject to the provisions in today's rule. In addition to verbal comments from industry noted by the Panel at meetings and teleconferences, written comments were received from each of the affected industry segments or their representatives. The Panel report contains a summary of these comments and the Panel's recommendations on options that could mitigate the adverse impacts on small businesses.

The Panel considered a range of options and regulatory alternatives for providing small businesses with flexibility in complying with new sulfur standards for highway diesel fuel. As part of the process, the Panel requested and received comment on several ideas for flexibility that were suggested by small entity representatives (SERs) and Panel members. The Panel's recommendations are discussed in detail in the Panel Report, contained in the docket. In the NPRM, EPA sought public comment on several ideas that stemmed from the Panel's recommendations, as well as on the Panel's recommendations. Taking into consideration the comments received on these ideas, as well as additional business and technical information gathered about potentially affected small entities, we are finalizing certain of those options today, as discussed in detail in Section IV above.

In addition to our participation in the SBREFA process, we conducted our own outreach, fact-finding, and analysis of the potential impacts of our regulations on small businesses. Some of the small refiners with whom we and the Panel met indicated their belief that their businesses may close due to the substantial costs, capital and other impacts of meeting the 15 ppm diesel fuel standard without either additional time or flexibility with respect to gasoline sulfur compliance. Based on these discussions and analyses, the Panel and we agree that small refiners would likely experience a significant and disproportionate financial hardship in reaching the objectives of our diesel fuel sulfur program. However, the Panel also noted that the burden imposed upon the small refiners by our sulfur requirements varied from refiner to refiner and could not be alleviated with a single provision. We agree with the Panel and are offering qualifying small refiners three options to choose from in moving toward compliance with the low sulfur diesel fuel requirements.

For today's action, we have structured a selection of temporary flexibilities for qualifying small refiners, both domestic and foreign, based on the factors described below. Generally, we structured these provisions to address small refiner hardship while expeditiously achieving air quality benefits and ensuring that the low sulfur diesel fuel coincides with the introduction of 2007 model year diesel vehicles. First, the compliance deadlines in the program, combined with flexibility for small refiners, will quickly achieve the air quality benefits of the program, while helping to ensure that small refiners will have adequate time to raise capital for new or revamped equipment. Second, we believe that allowing time for refinery sulfur-reduction technologies to be proven out by larger refiners before small refiners have to put them in place will likely allow for lower costs of these improvements in desulfurization technology (*e.g.,* better catalyst technology or lower-pressure hydrotreater technology). Third, providing small refiners more time to comply will increase the availability of engineering and construction resources. Since most large and small refiners must install additional processing equipment to meet the sulfur requirements, there will be a tremendous amount of competition for technology services, engineering manpower, and construction management and labor. Finally, because the gasoline and diesel sulfur requirements will occur in approximately the same time frame, small refiners that produce both fuels

EXHIBIT J

will have a greater difficulty than most other refiners in securing the necessary financing. Hence, any effort that increases small refiners' ability to stagger investments for low sulfur gasoline and diesel will facilitate compliance with the two programs. These factors are discussed further in Section IV.C.

Providing these options to assist small refiners experiencing hardship circumstances enables us to go forward with the 15 ppm sulfur standard beginning in 2006. Without this flexibility, the benefits of the 15 ppm standard would possibly not be achieved as quickly. By providing temporary relief to those refiners that need additional time, we are able to adopt a program that expeditiously reduces diesel sulfur levels in feasible manner for the industry as a whole. In addition, we believe the volume of diesel that will be affected by this hardship provision is marginal. We estimate that small refiners contribute approximately five percent of all domestic highway diesel fuel production.

The Final RFA evaluates the financial impacts of today's program on small entities. EPA believes that the regulatory alternatives finalized in this rule will provide substantial relief to qualifying small businesses from the potential adverse economic impacts of complying with today's rule. The three hardship options available to small refiners under today's rule are summarized below, and are discussed in more detail in Section IV.C and the FRFA.

500 ppm Option. A small refiner may continue to produce and sell diesel fuel meeting the current 500 ppm sulfur standard for four additional years, until May 31, 2010, provided that it reasonably ensures the existence of sufficient volumes of 15 ppm fuel in the marketing area(s) that it serves.

Small Refiner Credit Option. A small refiner that chooses to produce 15 ppm fuel prior to June 1, 2010 may generate and sell credits under the broader temporary compliance option. Since a small refiner has no requirement to produce 15 ppm fuel under this option, any fuel it produces at or below 15 ppm sulfur will qualify for generating credits.

Diesel/Gasoline Compliance Date Option. For small refiners that are also subject to the Tier 2/Gasoline sulfur program (40 CFR Part 80), the refiner may choose to extend by three years the duration of its applicable interim gasoline standards, provided that it also produces all its highway diesel fuel at 15 ppm sulfur beginning June 1, 2006.

One alternative for which we sought public comment, but are not finalizing today, is an option of allowing small refiners to produce highway diesel fuel meeting a less stringent sulfur standard (*e.g.,* 50 ppm). Some small refiners, and other refiners, commented that the costs of meeting a 50 ppm sulfur cap would be significantly less than those to meet a 15 ppm cap. However, we are not adopting less stringent sulfur standards for small refiners today, because the new diesel exhaust emissions control devices require diesel fuel with a sulfur content capped at 15 ppm in order to be viable and capable to meeting the 2007 emission standards. The need for 15 ppm sulfur diesel fuel is discussed in detail in Section III. Additional discussion of this issue can be found in the Response to Comments document. Additional information on the factual, policy, and legal reasons for the selection of alternatives considered for small refiners, and on any rejected alternatives, can be found in the FRFA, as well as in appropriate sections of the Preamble, RIA, and RTC.

As required by Section 212 of SBREFA, EPA also is preparing a small entity compliance guide to help small entities comply with this rule. Once available, small businesses will be able to obtain a copy through our web site at http://www.epa.gov/otaq.

C. Paperwork Reduction Act

This action establishes a standard for low sulfur diesel fuel that will become effective in 2006 and that involves the collection of information under the Paperwork Reduction Act, 44 U.S.C. 3501 *et seq.* An Agency may not conduct or sponsor, and a person is not required to respond to a collection of information, unless it displays a currently valid OMB control number. The OMB control numbers for our regulations are listed in 40 CFR Part 9 and 48 CFR Chapter 15.

For 500 ppm diesel fuel standards currently in effect, the existing ICR is ''Regulations of Fuel and Fuel Additives; Fuel Quality Regulations for Highway Diesel Sold in 1993 and Later Calendar Years; Recordkeeping Requirements,'' OMB Control Number 2060–0308, EPA ICR Number 1718.12 (expires July 31, 2001). Copies of this ICR may be obtained from Delores Evans, Office of Policy, Regulatory Information Division, U.S. Environmental Protection Agency (Mail Code 2137), 1200 Pennsylvania Avenue, NW., Washington, DC 20460. Please mark requests, ''Attention: Desk Officer for EPA'' and include the ICR in any correspondence.

The Paperwork Reduction Act stipulates that ICR documents estimate the burden of activities that will be required of regulated parties within a three year time period. Burden means the total time, effort, or financial resources expended by persons to generate, maintain, retain, or disclose or provide information to or for a Federal agency. This includes the time needed to review instructions; develop, acquire, install, and utilize technology and systems for the purposes of collecting, validating, and verifying information, processing and maintaining information, and disclosing and providing information; adjust the existing ways to comply with any previously applicable instructions and requirements; train personnel to be able to respond to a collection of information; search data sources; complete and review the collection of information; and transmit or otherwise disclose the information.

The information collection requirements (ICR) for this rule as it relates to low sulfur (15 ppm) diesel fuel will undergo any required public notice and comment and be submitted for approval to OMB under the Paperwork Reduction Act, 44 U.S.C. 3501 *et seq.* prior to any required information collection.

D. Intergovernmental Relations

1. Unfunded Mandates Reform Act

Title II of the Unfunded Mandates Reform Act of 1995 (UMRA), Public Law 104–4, establishes requirements for federal agencies to assess the effects of their regulatory actions on state, local, and tribal governments, and the private sector. Under Section 202 of the UMRA, EPA generally must prepare a written statement, including a cost-benefit analysis, for proposed and final rules with ''federal mandates'' that may result in expenditures to state, local, and tribal governments, in the aggregate, or to the private sector, of $100 million or more for any single year. Before promulgating a rule, for which a written statement is needed, Section 205 of the UMRA generally requires EPA to identify and consider a reasonable number of regulatory alternatives and adopt the least costly, most cost effective, or least burdensome alternative that achieves the objectives of the rule. The provisions of Section 205 do not apply when they are inconsistent with applicable law. Moreover, Section 205 allows EPA to adopt an alternative that is not the least costly, most cost effective, or least burdensome

EXHIBIT J

alternative if EPA provides an explanation in the final rule of why such an alternative was adopted.

Before we establish any regulatory requirement that may significantly or uniquely affect small governments, including tribal governments, we must develop a small government plan pursuant to Section 203 of the UMRA. Such a plan must provide for notifying potentially affected small governments, and enabling officials of affected small governments to have meaningful and timely input in the development of our regulations with significant federal intergovernmental mandates. The plan must also provide for informing, educating, and advising small governments on compliance with the regulatory requirements.

This rule contains no federal mandates for state, local, or tribal governments as defined by the provisions of Title II of the UMRA. The rule imposes no enforceable duties on any of these governmental entities. Nothing in this rule will significantly or uniquely affect small governments.

EPA has determined that this rule contains federal mandates that may result in expenditures of more than $100 million to the private sector in any single year. EPA considered and evaluated a wide range of regulatory alternatives before arriving at the program finalized today. EPA believes that today's final rule represents the least costly, most cost effective approach to achieve the air quality goals of the rule. The cost-benefit analysis required by the UMRA is discussed in Section V above and in the RIA. See the ''Administrative Designation and Regulatory Analysis'' Section (XI.A.) in today's preamble for further information regarding these analyses.

2. Executive Order 13084: Consultation and Coordination With Indian Tribal Governments

Under Executive Order 13084, EPA may not issue a regulation that is not required by statute, that significantly or uniquely affects the communities of Indian Tribal governments, and that imposes substantial direct compliance costs on those communities, unless the federal government provides the funds necessary to pay the direct compliance costs incurred by the tribal governments, or EPA consults with those governments. If EPA complies by consulting, Executive Order 13084 requires EPA to provide to the OMB, in a separately identified section of the preamble to the rule, a description of the extent of EPA's prior consultation with representatives of affected tribal governments, a summary of the nature of their concerns, and a statement supporting the need to issue the regulation. In addition, Executive Order 13084 requires EPA to develop an effective process permitting elected officials and other representatives of Indian tribal governments ''to provide meaningful and timely input in the development of regulatory policies on matters that significantly or uniquely affect their communities.''

Today's rule does not significantly or uniquely affect the communities of Indian Tribal governments. The engine emissions, diesel fuel, and other related requirements for private businesses in today's rule will have national applicability, and thus will not uniquely affect the communities of Indian Tribal Governments. Further, no circumstances specific to such communities exist that will cause an impact on these communities beyond those discussed in the other sections of this rule. Thus, EPA's conclusions regarding the impacts from the implementation of today's rule discussed in the other sections of this preamble are equally applicable to the communities of Indian Tribal governments. Accordingly, the requirements of Section 3(b) of Executive Order 13084 do not apply to this rule.

E. National Technology Transfer and Advancement Act

Section 12(d) of the National Technology Transfer and Advancement Act of 1995 (NTTAA), Section 12(d) of Public Law 104–113, directs EPA to use voluntary consensus standards in its regulatory activities unless it would be inconsistent with applicable law or otherwise impractical. Voluntary consensus standards are technical standards (e.g., materials specifications, test methods, sampling procedures, and business practices) developed or adopted by voluntary consensus standards bodies. The NTTAA directs EPA to provide Congress, through OMB, explanations when the Agency decides not to use available and applicable voluntary consensus standards.

This rule references technical standards adopted by the Agency through previous rulemakings. No new technical standards are established in today's rule. The standards referenced in today's rule involve the measurement of diesel fuel parameters and engine emissions. The measurement standards for diesel fuel parameters referenced in today's rule are all voluntary consensus standards. The engine emissions measurement standards referenced in today's rule are government-unique standards that were developed by the Agency through previous rulemakings. These standards have served the Agency's emissions control goals well since their implementation and have been well accepted by industry. EPA is not aware of any voluntary consensus standards for the measurement of engine emissions. Therefore, the Agency is using the existing EPA-developed standards found in 40 CFR Part 86 for the measurement of engine emissions.

F. Executive Order 13045: Children's Health Protection

Executive Order 13045, ''Protection of Children from Environmental Health Risks and Safety Risks'' (62 FR 19885, April 23, 1997) applies to any rule that (1) is determined to be ''economically significant'' as defined under Executive Order 12866, and (2) concerns an environmental health or safety risk that EPA has reason to believe may have a disproportionate effect on children. If the regulatory action meets both criteria, Section 5–501 of the Order directs the Agency to evaluate the environmental health or safety effects of the planned rule on children, and explain why the planned regulation is preferable to other potentially effective and reasonably feasible alternatives considered by the Agency.

This rule is subject to the Executive Order because it is an economically significant regulatory action as defined by Executive Order 12866 and it concerns in part an environmental health or safety risk that EPA has reason to believe may have a disproportionate effect on children.

This rulemaking will achieve significant reductions of various emissions from heavy-duty engines, including NO_X, PM, VOCs and air toxics. These pollutants raise concerns regarding environmental health or safety risks that EPA has reason to believe may have a disproportionate effect on children, such as impacts from ozone, PM and certain toxic air pollutants. See Section II and the RIA for a further discussion of these issues.

The effects of ozone and PM on children's health were addressed in detail in EPA's rulemaking to establish the NAAQS for these pollutants, and EPA is not revisiting those issues here. The emission reductions from the strategies in this rulemaking will further reduce air toxics and the related adverse impacts on children's health. In a separate rulemaking under Section 202(l) of the Act, EPA addresses the emissions of hazardous air pollutants from motor vehicles and fuels, and the appropriate level of control of HAPs from these sources. It is important to note that the air toxics reductions that the Agency expects to achieve based on

EXHIBIT J

today's action are an integral part of the Agency's comprehensive strategy to address air toxics from motor vehicles under section 202(l).

In this rule, EPA has evaluated several regulatory strategies for reductions in emissions from heavy-duty engines. (See Section III of this rule as well as the RIA.) For the reasons described there, EPA believes that the strategies are preferable under the CAA to other potentially effective and reasonably feasible alternatives considered by the Agency, for purposes of reducing emissions from these sources as a way of helping areas achieve and maintain the NAAQS for ozone and PM. Moreover, EPA believes that it has selected for this rule the most stringent and effective control reasonably feasible at this time, in light of the technology and cost requirements of the Act.

G. Executive Order 13132: Federalism

Executive Order 13132, entitled ''Federalism'' (64 FR 43255, August 10, 1999), requires EPA to develop an accountable process to ensure ''meaningful and timely input by State and local officials in the development of regulatory policies that have federalism implications.'' ''Policies that have federalism implications'' is defined in the Executive Order to include regulations that have ''substantial direct effects on the States, on the relationship between the national government and the States, or on the distribution of power and responsibilities among the various levels of government.''

Under Section 6 of Executive Order 13132, EPA may not issue a regulation that has federalism implications, that imposes substantial direct compliance costs, and that is not required by statute, unless the Federal government provides the funds necessary to pay the direct compliance costs incurred by State and local governments, or EPA consults with State and local officials early in the process of developing the regulation. EPA also may not issue a regulation that has federalism implications and that preempts State law, unless the Agency consults with State and local officials early in the process of developing the regulation.

Section 4 of the Executive Order contains additional requirements for rules that preempt State or local law, even if those rules do not have federalism implications (i.e., the rules will not have substantial direct effects on the States, on the relationship between the national government and the states, or on the distribution of power and responsibilities among the various levels of government). Those requirements include providing all affected State and local officials notice and an opportunity for appropriate participation in the development of the regulation. If the preemption is not based on express or implied statutory authority, EPA also must consult, to the extent practicable, with appropriate State and local officials regarding the conflict between State law and Federally protected interests within the agency's area of regulatory responsibility.

This rule does not have federalism implications. It will not have substantial direct effects on the States, on the relationship between the national government and the States, or on the distribution of power and responsibilities among the various levels of government, as specified in Executive Order 13132. Section 211(d)(4)(A) of the CAA prohibits states from prescribing or attempting to enforce controls or prohibitions respecting any fuel characteristic or component if EPA has prescribed a control or prohibition applicable to such fuel characteristic or component under Section 211(c)(1) of the Act. This rule merely modifies existing EPA diesel fuel and heavy-duty vehicle standards and therefore will merely continue an existing preemption of State and local law as discussed in Section VI. Thus, Executive Order 13132 does not apply to this rule.

Although Section 6 of Executive Order 13132 does not apply to this rule, EPA did consult with representatives of various State and local governments in developing this rule. In particular EPA consulted with the State of Alaska in the design of the program as it applies to them, as discussed in Section IV. EPA also talked to representatives from the State of California as well as representatives from STAPPA/ALAPCO, which represents state and local air pollution officials.

H. Congressional Review Act

The Congressional Review Act, 5 U.S.C. 801 *et seq.,* as added by the Small Business Regulatory Enforcement Fairness Act of 1996, generally provides that before a rule may take effect, the agency promulgating the rule must submit a rule report, which includes a copy of the rule, to each House of the Congress and to the Comptroller General of the United States. EPA will submit a report containing this rule and other required information to the U.S. Senate, the U.S. House of Representatives, and the Comptroller General of the United States prior to publication of the rule in the **Federal Register**. This rule is a ''major rule'' as defined by 5 U.S.C. 804(2).

XI. Statutory Provisions and Legal Authority

Statutory authority for the engine controls finalized in this document can be found in Sections 202, 203, 206, 207, 208, and 301 of the CAA, as amended, 42 U.S.C. 7521, 7522, 7525, 7541, 7542, and 7601.

Statutory authority for the fuel controls finalized in this notice comes from Section 211(c) and 211(i) of the CAA, which allows EPA to regulate fuels that either contribute to air pollution which endangers public health or welfare or which impair emission control equipment which is in general use or has been in general use. Additional support for the procedural and enforcement-related aspects of the fuel's controls in today's rule, including the record keeping requirements, comes from Sections 114(a) and 301(a) of the CAA.

List of Subjects

40 CFR Part 69

Environmental protection, Air pollution control.

40 CFR Part 80

Environmental protection, Fuel additives, Gasoline, Imports, Incorporation by reference, Labeling, Motor vehicle pollution, Penalties, Reporting and recordkeeping requirements.

40 CFR Part 86

Environmental protection, Administrative practice and procedure, Confidential business information, Incorporation by reference, Labeling, Motor vehicle pollution, Reporting and recordkeeping requirements.

Dated: December 21, 2000.

Carol M. Browner,

Administrator.

For the reasons set forth in the preamble, we amend parts 69, 80 and 86 of title 40 of the Code of Federal Regulations to read as follows:

PART 69—SPECIAL EXEMPTIONS FROM THE REQUIREMENTS OF THE CLEAN AIR ACT

1. The authority citation for part 69 is revised to read as follows:

Authority: 42 U.S.C. 7545(c), (g) and (i), and 7625–1.

Subpart E—Alaska

2. Section 69.51 of subpart E is revised to read as follows:

§ 69.51 Motor vehicle diesel fuel.

(a) Diesel fuel that is designated for use only in Alaska and is used only in

EXHIBIT J

Alaska, is exempt from the sulfur standard of 40 CFR 80.29(a)(1) and the dye provisions of 40 CFR 80.29(a)(3) and 40 CFR 80.29(b) until the implementation dates of 40 CFR 80.500, provided that:

(1) The fuel is segregated from non-exempt diesel fuel from the point of such designation; and

(2) On each occasion that any person transfers custody or title to the fuel, except when it is dispensed at a retail outlet or wholesale purchaser-consumer facility, the transferor must provide to the transferee a product transfer document stating:

This diesel fuel is for use only in Alaska. It is exempt from the federal low sulfur standards applicable to highway diesel fuel and red dye requirements applicable to non-highway diesel fuel only if it is used in Alaska.

(b) Beginning on the implementation dates in 40 CFR 80.500, diesel fuel that is designated for use in Alaska or is used in Alaska, is subject to the applicable provisions of 40 CFR Part 80, Subpart I, except as provided under paragraph (c) of this section. The Governor of Alaska may submit for EPA approval, by April 1, 2002, a plan for implementing the sulfur standard in Alaska as an alternative to the temporary compliance option provided under §§ 80.530–80.532. If EPA approves an alternative plan, the provisions as approved by EPA under that plan shall apply to the diesel fuel subject to this paragraph (b).

(c) If such diesel fuel is designated as fuel that does not comply with the standards and requirements for motor vehicle diesel fuel under 40 CFR Part 80, Subpart I, it is exempt from the dye presumption of 40 CFR 80.520(b)(2) provided that:

(1) The fuel is segregated from all motor vehicle diesel fuel.

(2) On each occasion that any person transfers custody or title to the fuel, except when it is dispensed at a retail outlet or wholesale purchaser-consumer facility, the transferor must provide to the transferee a product transfer document complying with the requirements of 40 CFR 80.590(a) through (d) and (g), and stating:

This diesel fuel is for use only in Alaska and is not for use in highway vehicles. It is exempt from the red dye requirement applicable to non-highway diesel fuel only if it is used in Alaska.

(3) Any pump dispensing the fuel must comply with the labeling requirements in 40 CFR 80.570(c).

PART 80—REGULATION OF FUELS AND FUEL ADDITIVES

3. The authority citation for part 80 is revised to read as follows:

Authority: 42 U.S.C. 7414, 7545, and 7601(a).

4. Section 80.2 is amended by revising paragraphs (x) and (y) and adding paragraphs (bb), (nn), and (xx) to read as follows:

§ 80.2 Definitions.

* * * * *

(x) *Diesel fuel* means any fuel sold in any state or Territory of the United States and suitable for use in diesel motor vehicles, diesel motor vehicle engines or diesel nonroad engines, and which is commonly or commercially known or sold as diesel fuel.

(y) *Motor vehicle diesel fuel* means any diesel fuel, or any distillate product, that is used, intended for use, or made available for use, as a fuel in diesel motor vehicles or diesel motor vehicle engines.

* * * * *

(bb) *Sulfur percentage* is the percentage of sulfur in diesel fuel by weight, as determined using the applicable sampling and testing methodologies set forth in § 80.580.

* * * * *

(nn) *Batch of motor vehicle diesel fuel* means a quantity of diesel fuel which is homogeneous with regard to those properties that are specified for motor vehicle diesel fuel under subpart I of this part.

* * * * *

(xx) *Motor vehicle diesel fuel additive* means any substance not composed solely of carbon and/or hydrogen, or of diesel blendstocks, that is added, intended for adding, used, or offered for use in motor vehicle diesel fuel subsequent to the production of diesel fuel by processing crude oil from refinery processing units, or in diesel motor vehicle fuel systems.

* * * * *

5. Section 80.29 is amended by revising paragraphs (a) and (b), to read as follows:

§ 80.29 Controls and prohibitions on diesel fuel quality.

(a) *Prohibited activities.* Beginning October 1, 1993 and continuing until the implementation dates for subpart I of part 80 as specified in § 80.500, except as provided in 40 CFR 69.51, no person, including but not limited to, refiners, importers, distributors, resellers, carriers, retailers or wholesale purchaser-consumers, shall manufacture, introduce into commerce, sell, offer for sale, supply, store, dispense, offer for supply or transport any diesel fuel for use in motor vehicles, unless the diesel fuel:

(1) Has a sulfur percentage, by weight, no greater than 0.05 percent;

(2)(i) Has a cetane index of at least 40; or

(ii) Has a maximum aromatic content of 35 volume percent; and

(3) Is free of visible evidence of the dye solvent red 164; unless it is used in a manner that is tax-exempt as defined under section 4082 of the Internal Revenue Code (26 U.S.C. 4082).

(b) *Determination of compliance.* (1) Any diesel fuel which does not show visible evidence of being dyed with dye solvent red 164 (which has a characteristic red color in diesel fuel) shall be considered to be available for use in diesel motor vehicles and motor vehicle engines, and shall be subject to the prohibitions of paragraph (a) of this section.

(2) Compliance with the sulfur, cetane, and aromatics standards in paragraph (a) of this section shall be determined based on the level of the applicable component or parameter, using the sampling methodologies specified in § 80.330(b), as applicable, and the appropriate testing methodologies specified in § 80.580(a) for sulfur, § 80.2(w) for cetane index, and § 80.2(z) for aromatic content. Any evidence or information, including the exclusive use of such evidence or information, may be used to establish the level of the applicable component or parameter in the diesel fuel, if the evidence or information is relevant to whether that level would have been in compliance with the standard if the appropriate sampling and testing methodology had been correctly performed. Such evidence may be obtained from any source or location and may include, but is not limited to, test results using methods other than the compliance methods in this paragraph (b), business records, and commercial documents.

(3) Determination of compliance with the requirements of this section other than the standards described in paragraph (a) of this section, and determination of liability for any violation of this section, may be based on information obtained from any source or location. Such information may include, but is not limited to, business records and commercial documents.

* * * * *

6. Section 80.30 is amended by revising paragraphs (g)(2)(ii) and (g)(4)(i), and adding paragraph (h), to read as follows;

EXHIBIT J

§ 80.30 Liability for violations of diesel fuel controls and prohibitions.

* * * * *

(g) *Defenses.* * * *

* * * * *

(2) * * *

(ii) Test results, performed in accordance with the applicable sampling and testing methodologies set forth in §§ 80.2(w), 80.2(z), 80.2(bb), and 80.580, which evidence that the diesel fuel determined to be in violation was in compliance with the diesel fuel standards of § 80.29(a) when it was delivered to the next party in the distribution system;

* * * * *

(4) * * *

(i) Test results, performed in accordance with the applicable sampling and testing methodologies set forth in §§ 80.2(w), 80.2(z), 80.2(bb), and 80.580, which evidence that the diesel fuel determined to be in violation was in compliance with the diesel fuel standards of § 80.29(a) when it was delivered to the next party in the distribution system;

* * * * *

(h) *Detection of violations.* In paragraphs (a) through (f) of this section, the term ''is detected at'' means that the violation existed at the facility in question, and the existence of the violation at that facility may be established through evidence obtained or created at that facility, at any other location, and by any party.

7. Section 80.215 is amended by revising paragraph (b) to read as follows:

§ 80.215 What is the scope of the geographic phase-in program?

* * * * *

(b) *Duration of the program.* (1) The geographic phase-in program applies to the 2004, 2005, and 2006 annual averaging periods, except as provided in paragraph (b)(2) of this section.

(2) Subject to the provisions of § 80.540, the geographic phase-in program shall also apply to the 2007 and 2008 annual averaging period for refiners approved for GPA standards in 2007 and 2008 under § 80.540.

* * * * *

8. Section 80.220 is amended by adding paragraph (c) to read as follows:

§ 80.220 What are the downstream standards for GPA gasoline?

* * * * *

(c) Notwithstanding paragraph (a) of this section, the sulfur content standard of 326 ppm at any downstream location may be extended as provided under § 80.540(m).

9. Section 80.240 is amended by adding paragraph (e), to read as follows:

§ 80.240 What are the small refiner gasoline sulfur standards?

* * * * *

(e) Notwithstanding paragraph (a) of this section, the temporary sulfur standards for small refiners may be extended as provided under § 80.553.

10. Subpart I is added to part 80 to read as follows:

Subpart I—Motor Vehicle Diesel Fuel

General Information

Sec.
80.500 What are the implementation dates for the diesel fuel sulfur control program?
80.501 What diesel fuel is subject to the provisions of this subpart?
80.502–80.519 [Reserved]

Motor Vehicle Diesel Fuel Standards and Requirements

80.520 What are the standards and dye requirements for motor vehicle diesel fuel?
80.521 What are the standards and identification requirements for motor vehicle diesel fuel additives?
80.522 May used motor oil be dispensed into diesel motor vehicles?
80.523 What diesel fuel designation requirements apply to refiners and importers?
80.524 What sulfur content standard applies to motor vehicle diesel fuel downstream of the refinery or importer?
80.525 What requirements apply to kerosene blenders?
80.526 [Reserved]
80.527 Under what conditions may motor vehicle diesel fuel subject to the 15 ppm sulfur standard be downgraded as motor vehicle diesel fuel subject to the 500 ppm sulfur standard?
80.528—80.529 [Reserved]

Temporary Compliance Option

80.530 Under what conditions can 500 ppm motor vehicle diesel fuel be produced or imported?
80.531 How are motor vehicle diesel fuel credits generated?
80.532 How are credits used and transferred?
80.533–80.539 [Reserved]

Geographic Phase-In Provisions

80.540 How may a refiner be approved to produce gasoline under the GPA gasoline sulfur standards in 2007 and 2008?
80.541–80.549 [Reserved]

Small Refiner Hardship Provisions

80.550 What is the definition of a small refiner under this subpart?
80.551 How does a refiner obtain approval as a small refiner under this subpart?
80.552 What compliance options are available to small refiners?
80.553 Under what conditions may the small refiner gasoline sulfur standards be extended for a small refiner of motor vehicle diesel fuel?
80.554–80.559 [Reserved]

Other Hardship Provisions

80.560 How can a refiner seek temporary relief from the requirements of this subpart in case of extreme hardship circumstances?
80.561 How can a refiner or importer seek temporary relief from the requirements of this subpart in case of extreme unforseen circumstances?
80.562–80.569 [Reserved]

Labeling Requirements

80.570 What labeling requirements apply to retailers and wholesale purchaser-consumers of motor vehicle diesel fuel?
80.571–80.579 [Reserved]

Sampling and Testing

80.580 What are the sampling and testing methods for sulfur?
80.581–80.589 [Reserved]

Recordkeeping and Reporting Requirements

80.590 What are the product transfer document requirements for motor vehicle diesel fuel?
80.591 What are the product transfer document requirements for additives to be used in motor vehicle diesel fuel?
80.592 What records must be kept?
80.593 What are the reporting and registration requirements for refiners and importers of motor vehicle diesel fuel subject to temporary refiner relief standards?
80.594 What are the pre-compliance reporting requirements?
80.595 How does a refiner apply for a motor vehicle diesel fuel volume baseline?
80.596 How is a refinery motor vehicle diesel fuel volume baseline calculated?
80.597 What are the registration requirements?
80.598–80.599 [Reserved]

Exemptions

80.600 What are the requirements for obtaining an exemption for motor vehicle diesel fuel used for research, development or testing purposes?
80.601 What requirements apply to motor vehicle diesel fuel for use in the Territories?
80.602 What exemption applies to diesel fuel used in vehicles having a national security exemption from motor vehicle emissions standards?
80.603–80.609 [Reserved]

Violation Provisions

80.610 What acts are prohibited under the diesel fuel sulfur program?
80.611 What evidence may be used to determine compliance with the prohibitions and requirements of this subpart and liability for violations of this subpart?
80.612 Who is liable for violations of this subpart?
80.613 What defenses apply to persons deemed liable for a violation of a prohibited act?
80.614 What penalties apply under this subpart?

EXHIBIT J

80.615–80.619 [Reserved]

Provisions for Foreign Refiners and Importers for Motor Vehicle Diesel Fuel Subject to a Temporary Compliance Option or Hardship Provision

80.620 What are the additional requirements for motor vehicle diesel fuel produced by foreign refineries subject to a temporary refiner compliance option or hardship provisions?

Subpart I—Motor Vehicle Diesel Fuel

General Information

§ 80.500 What are the implementation dates for the diesel fuel sulfur control program?

The implementation dates for standards for motor vehicle diesel fuel and diesel fuel additives, and for other provisions of this subpart, are as follows:

(a) *Implementation date for standards applicable to production or importation of motor vehicle diesel fuel, and to motor vehicle diesel fuel additives.* Except as provided in paragraph (d) of this section, beginning June 1, 2006:

(1) The standards and requirements under § 80.520(a) and (b) shall apply to any motor vehicle diesel fuel produced or imported by any refiner or importer; and

(2) The standards and requirements under § 80.521 shall apply to any motor vehicle diesel fuel additive.

(b) *Implementation date for standards applicable to motor vehicle diesel fuel downstream of the refinery or importer.* Except as provided in paragraphs (c) and (d) of this section, beginning July 15, 2006, the standards and requirements under § 80.520(a) and (b) shall apply to any motor vehicle diesel fuel at any downstream location.

(c) *Implementation date for standards applicable to motor vehicle diesel fuel at retail outlets and wholesale purchaser-consumer facilities.* Except as provided in paragraph (d) of this section, beginning September 1, 2006, the standards and requirements under § 80.520(a) and (b) shall apply to any motor vehicle diesel fuel at any retail outlet or wholesale purchaser-consumer facility.

(d) *Implementation date for motor vehicle diesel fuel subject to the 500 ppm sulfur content standard in § 80.520(c).* (1) Beginning June 1, 2006, the sulfur content standard of § 80.520(c) shall apply to motor vehicle diesel fuel, but only where authorized under, and subject to, an applicable provision of this Subpart.

(2) Beginning June 1, 2010, the sulfur content standard of § 80.520(c) shall no longer apply to any motor vehicle diesel fuel produced or imported by any refiner or importer.

(3) Beginning October 1, 2010, the sulfur content standard of § 80.520(c) shall no longer apply to any motor vehicle diesel fuel at any downstream location other than a retail or wholesale purchaser-consumer facility.

(4) Beginning December 1, 2010, the sulfur content standard of § 80.520(c) shall no longer apply to any motor vehicle diesel fuel.

(e) *Other provisions.* All other provisions of this subpart apply beginning June 1, 2006, unless another date is specified.

(f) For purposes of this subpart, the term ''downstream location'' shall mean any point in the diesel fuel distribution system downstream from refineries and import facilities, including diesel fuel at facilities of distributors, carriers, retailers, kerosene blenders, and wholesale purchaser-consumers.

§ 80.501 What diesel fuel is subject to the provisions of this subpart?

(a) *Included fuel and additives.* The provisions of this subpart apply to motor vehicle diesel fuel as defined in § 80.2(y), motor vehicle diesel fuel additives as defined in § 80.2(xx), and motor oil that is used as or intended for use as fuel in diesel motor vehicles or is blended with diesel fuel for use in diesel motor vehicles at any downstream location, as provided in § 80.500(f).

(b) *Excluded fuel.* The provisions of this subpart do not apply to motor vehicle diesel fuel that is designated for export outside the United States, and identified for export by a transfer document as required under § 80.590.

§§ 80.502–80.519 [Reserved]

Motor Vehicle Diesel Fuel Standards and Requirements

§ 80.520 What are the standards and dye requirements for motor vehicle diesel fuel?

(a) *Standards.* All motor vehicle diesel fuel is subject to the following per-gallon standards:

(1) *Sulfur content.* 15 parts per million (ppm) maximum, except as provided in paragraph (c) of this section;

(2) *Cetane index and aromatic content.* (i) A minimum cetane index of 40; or

(ii) A maximum aromatic content of 35 volume percent.

(b) *Dye requirements.* (1) All motor vehicle diesel fuel shall be free of visible evidence of dye solvent red 164 (which has a characteristic red color in diesel fuel), except for motor vehicle diesel fuel that is used in a manner that is tax exempt under section 4082 of the Internal Revenue Code.

(2) Any diesel fuel that does not show visible evidence of dye solvent red 164 shall be considered to be motor vehicle diesel fuel and subject to all the requirements of this subpart for motor vehicle diesel fuel, except for diesel fuel designated or classified for use only in:

(i) The State of Alaska as provided under 40 CFR 69.51; or

(ii) Jet aircraft, a research and development testing program exempted under 80.600, or motor vehicles covered by an exemption under § 80.602.

(c) Pursuant and subject to the provisions of §§ 80.530–80.532, 80.552(a), 80.560–80.561, and 80.620, only motor vehicle diesel fuel produced or imported in full compliance with the requirements of those provisions is subject to the following per-gallon standard for sulfur content: 500 ppm maximum.

(d) Kerosene and any other distillate product, that meets the definition of motor vehicle diesel fuel, is subject to the standards and requirements under this section.

§ 80.521 What are the standards and identification requirements for motor vehicle diesel fuel additives?

(a) Except as provided in paragraph (b) of this section, any motor vehicle diesel fuel additive that is added, intended for adding, used, or offered for use in motor vehicle diesel fuel subject to the 15 ppm sulfur content standard, at any downstream location must:

(1) Have a sulfur content not exceeding 15 ppm; and

(2) Be accompanied a product transfer document pursuant to § 80.591 indicating that the additive complies with the 15 ppm standard for motor vehicle diesel fuel, except for those diesel fuel additives which are only sold in containers for use by the ultimate consumer of motor vehicle diesel fuel and which are subject to the requirements of § 80.591(d).

(b) Any motor vehicle diesel fuel additive that is added, intended for adding, used, or offered for use in motor vehicle diesel fuel subject to the 15 ppm sulfur content standard may have a sulfur content exceeding 15 ppm provided that:

(1) The additive is added or used in the motor vehicle diesel fuel in a quantity less than 1% by volume of the resultant additive/diesel fuel mixture;

(2) The product transfer document pursuant to § 80.591 indicates that the additive may exceed the 15 ppm sulfur standard, that improper use of the additive may result in non-complying fuel, and that the additive complies

EXHIBIT J

with the sulfur information requirements of § 80.591(b)(3); and

(3) The additive is not used or intended for use by an ultimate consumer in diesel motor vehicles.

§ 80.522 May used motor oil be dispensed into diesel motor vehicles?

No person may introduce used motor oil, or used motor oil blended with diesel fuel, into the fuel system of model year 2007 or later diesel motor vehicles, unless both of the following requirements have been met:

(a) The vehicle or engine manufacturer has received a Certificate of Conformity under 40 CFR Part 86 and the certification of the vehicle or engine configuration is explicitly based on emissions data with the addition of motor oil; and

(b) The oil is added in a manner and rate consistent with the conditions of the Certificate of Conformity.

§ 80.523 What diesel fuel designation requirements apply to refiners and importers?

Any refiner or importer shall accurately and clearly designate all fuel it produces or imports for use in diesel motor vehicles as either motor vehicle diesel fuel meeting the 15 ppm sulfur standard under § 80.520(a)(1) or as motor vehicle diesel fuel meeting the 500 ppm sulfur standard under § 80.520(c).

§ 80.524 What sulfur content standard applies to motor vehicle diesel fuel downstream of the refinery or importer?

(a) Except as provided in paragraph (b) of this section or otherwise in the provisions of this Subpart I, the 15 ppm sulfur content standard of § 80.520(a) shall apply to all motor vehicle diesel fuel at any downstream location.

(b) Prior to the October 1, 2010 and December 1, 2010 dates specified in § 80.500(d)(3) and (4), the 500 ppm sulfur content standard of § 80.520(c) shall apply to motor vehicle diesel fuel at any downstream location, provided the following conditions are met:

(1) The product transfer documents comply with the requirements of § 80.590, including indicating that the fuel complies with the 500 ppm sulfur standard for motor vehicle diesel fuel and is for use only in model year 2006 and older diesel motor vehicles, or the fuel is downgraded pursuant to the provision of § 80.527 to motor vehicle diesel fuel subject to the 500 ppm sulfur standard;

(2) The motor vehicle diesel fuel is not represented or intended for sale or use as subject to the 15 ppm sulfur content standard, and is not dispensed, or intended to be dispensed, into model year 2007 and later motor vehicles by a retailer or wholesale purchaser-consumer; and

(3) For retailers or wholesale purchaser-consumers, the pump labeling requirements of § 80.570(a) are satisfied.

§ 80.525 What requirements apply to kerosene blenders?

(a) For purposes of this subpart, a kerosene blender means any refiner who produces motor vehicle diesel fuel by adding kerosene to motor vehicle diesel fuel downstream of the refinery that produced the motor vehicle diesel fuel or of the import facility where the motor vehicle diesel fuel was imported, without altering the quality or quantity of the motor vehicle diesel fuel in any other manner.

(b) Kerosene blenders are not subject to the requirements of this subpart applicable to refiners of motor vehicle diesel fuel, but are subject to the requirements and prohibitions applicable to downstream parties.

(c) For purposes of compliance with § 80.524(b)(1), the product transfer documents must indicate that the fuel to which kerosene is added complies with the 500 ppm sulfur standard for motor vehicle diesel fuel and is for use only in model year 2006 and older diesel motor vehicles, or the fuel is properly downgraded pursuant to the provisions of § 80.527 to motor vehicle diesel fuel subject to the 500 ppm sulfur standard.

(d) Kerosene that a kerosene blender adds or intends to add to motor vehicle diesel fuel subject to the 15 ppm sulfur content standard must meet the 15 ppm sulfur content standard, and the following requirements:

(1) The product transfer document received by the kerosene blender indicates that the kerosene is motor vehicle diesel fuel that complies with the 15 ppm sulfur content standard; or

(2) The kerosene blender has test results indicating the kerosene complies with the 15 ppm sulfur standard.

§ 80.526 [Reserved]

§ 80.527 Under what conditions may motor vehicle diesel fuel subject to the 15 ppm sulfur standard be downgraded as motor vehicle diesel fuel subject to the 500 ppm sulfur standard?

(a) *Definition.* As used in this section, *downgrade* means changing the classification of motor vehicle diesel fuel subject to the 15 ppm sulfur standard under § 80.520(a)(1) to motor vehicle diesel fuel subject to the 500 ppm sulfur standard under § 80.520(c). A *downgrade* occurs when the change in classification takes place. Changing the classification of motor vehicle diesel fuel subject to the 15 ppm sulfur standard under § 80.520(a)(1) to any fuel that is not motor vehicle diesel fuel is not a *downgrade* for purposes of this section and is not limited by the provisions of this section.

(b) *Who may downgrade.* Any person in the motor vehicle diesel fuel distribution system who has custody or title to motor vehicle diesel fuel may downgrade it.

(c) *Downgrading limitation.* (1) Except as provided in paragraphs (d) and (e) of this section, a person described in paragraph (c)(4) of this section may not downgrade a total of more than 20% of the motor vehicle diesel fuel (by volume) that is subject to the 15 ppm sulfur standard of § 80.520(a)(1) while such person has title to or custody of such fuel. In addition, a refiner or importer may only downgrade (subject to the 20% limit) motor vehicle diesel fuel designated under § 80.523 as subject to 15 ppm sulfur standard under § 80.520(a)(1) after it has been so designated and after it has been moved from the refinery's, or import facility's, storage tank or other vessel where the diesel fuel batch was designated as subject to the sulfur standard of § 80.520(a) under § 80.523.

(2) The limitation of paragraph (c)(1) of this section applies separately to each person who has custody or title of the fuel when it is downgraded.

(3) Compliance with the limitation of paragraph (c)(1) of this section shall be on an annual, calendar year basis (except in 2006 compliance shall be for the period June 1, 2006 through December 31, 2006, and in 2010 compliance shall be for the period January 1 through May 31).

(4) The limitation of this section applies to persons who sell, offer for sale, dispense, supply, store or transport diesel fuel. The limitation does not apply to persons who are transferred custody or title to motor vehicle diesel fuel when it is dispensed into motor vehicles at retail outlets.

(d) *Diesel fuel in violation of the 15 ppm standard.* Where motor vehicle diesel fuel subject to the sulfur standard of § 80.520(a)(1) is found to be in violation of any standard under § 80.520(a) and is consequently downgraded, the person, or persons, having custody and title to the fuel at the time it is found to be in violation must include the volume of such fuel toward its 20% volume limitation under paragraph (c)(1) of this section, unless the person, or persons, demonstrates that it did not cause the violation.

(e) *Special provisions for retail outlets and wholesale purchaser-consumer facilities.* Notwithstanding the

EXHIBIT J

provisions of paragraph (c)(1) of this section, retailers and wholesale purchaser-consumers shall comply with the downgrading limitation as follows:

(1) Retailers and wholesale purchaser-consumers who sell, offer for sale, or dispense motor vehicle diesel fuel that is subject to the 15 ppm sulfur standard under § 80.520(a)(1) are exempt from the volume limitations of paragraph (c)(1) of this section.

(2) A retailer or wholesale purchaser-consumer who does not sell, offer for sale, or dispense motor vehicle diesel fuel subject to the 15 ppm sulfur standard under § 80.520(a)(1) may not downgrade a volume of motor vehicle diesel fuel classified as subject to the 15 ppm sulfur standard greater than 20% of the total volume of motor vehicle diesel fuel that it sells, offers for sale, or dispenses annually.

(f) *Product transfer documents.* If the custody or title to any motor vehicle diesel fuel that is downgraded under this section is transferred, the product transfer documents under § 80.590 for such fuel must reflect the change in classification to motor vehicle diesel fuel subject to the 500 ppm sulfur standard.

(g) *Recordkeeping requirement.* Any person subject to the provisions of this section, as described in paragraph (c)(4) of this section, who downgrades any motor vehicle diesel fuel previously classified as subject to the 15 ppm sulfur standard under § 80.520(a)(1) during any calendar year, must make and maintain records sufficient to show compliance with the requirements and limitations of this section.

(h) *Termination of downgrading limitations.* The provisions of this section shall not apply after May 31, 2010.

§§ 80.528–80.529 [Reserved.]

Temporary Compliance Option

§ 80.530 Under what conditions can 500 ppm motor vehicle diesel fuel be produced or imported?

(a) Beginning June 1, 2006, a refiner or importer may produce or import motor vehicle diesel fuel subject to the 500 ppm sulfur content standard of § 80.520(c) if all of the following requirements are met:

(1) Each batch of motor vehicle diesel fuel subject to the 500 ppm sulfur content standard must be designated by the refiner or importer as subject to such standard, pursuant to § 80.523.

(2) The refiner or importer must meet the requirements for product transfer documents in § 80.590 for each batch subject to the 500 ppm sulfur content standard.

(3)(i) The volume V_{500} of diesel fuel that is produced or imported during a compliance period, as provided in paragraph (a)(5) of this section, may not exceed the following volume limit:

(A) For compliance periods prior to 2010, 20% of the volume V_t of diesel fuel that is produced or imported during a compliance period plus an additional volume of motor vehicle diesel fuel represented by credits properly generated and used pursuant to the requirements of §§ 80.531 and 80.532.

(B) For the compliance period of January 1, 2010 through May 31, 2010, the volume of motor vehicle diesel fuel represented by credits properly generated and used pursuant to the requirements of §§ 80.531 and 80.532.

(ii) The terms V_{500} and V_t have the meaning specified in § 80.531(a)(2).

(4) Compliance with the volume limit in paragraph (a)(3) of this section must be determined separately for each refinery. For an importer, such compliance must be determined separately for each Credit Trading Area (as defined in § 80.531) into which motor vehicle diesel fuel is imported. If a party is both a refiner and an importer, such compliance shall be determined separately for the refining and importation activities.

(5) Compliance with the volume limit in paragraph (a)(3) of this section shall be determined on a calendar year basis, where the calendar year period is from January 1st through December 31st. For the year 2006, compliance shall be determined for the period June 1, 2006 through December 31, 2006. For the year 2010, compliance shall be determined for the period of January 1, 2010 through May 31, 2010.

(6) Any motor vehicle diesel fuel produced or imported above the volume limit in paragraph (a)(3) of this section shall be subject to the 15 ppm sulfur content standard. However, for any compliance period prior to and including 2009, a refiner or importer may exceed the volume limit in paragraph (a)(3) of this section by no more than 5 percent of the volume V_t of diesel fuel produced or imported during the compliance period, provided that for the immediately following calendar year:

(i) The refiner or importer complies with the volume limit in paragraph (a)(3) of this section; and

(ii) The refiner or importer produces or imports a volume of motor vehicle diesel fuel subject to the 15 ppm sulfur standard, or obtains credits properly generated and used pursuant to the requirements of §§ 80.531 and 80.532 that represent a volume of motor vehicle diesel fuel, equal to the volume of the exceedence for the prior compliance period.

(b) After May 31, 2010, no refiner or importer may produce or import motor vehicle diesel fuel subject to the 500 ppm sulfur content standard pursuant to this section.

§ 80.531 How are motor vehicle diesel fuel credits generated?

(a) *Generation of credits from June 1, 2006 through December 31, 2009.* (1) A refiner or importer may generate credits during the period June 1, 2006 through December 31, 2009, for motor vehicle diesel fuel produced or imported that is designated as subject to the 15 ppm sulfur content standard under § 80.520(a)(1). Credits may be generated only if the volume of motor vehicle diesel fuel designated under § 80.523 as subject to the 15 ppm sulfur standard of § 80.520(a) exceeds 80% of the total volume of diesel fuel produced or imported as described in paragraph (a)(2) of this section.

(2) The number of credits generated shall be calculated for each compliance period (as specified in § 80.530(a)(5)) as follows:

$$C = V_{15} - (0.80 \times V_t)$$

Where:

C = the positive number of credits generated, in gallons.

V_{15} = the total volume in gallons of motor vehicle diesel fuel produced or imported that is designated under § 80.523 as subject to the standards of § 80.520(a) during the compliance period.

V_{500} = the total volume in gallons of motor vehicle diesel fuel produced or imported that is designated under § 80.523 as subject to the 500 ppm sulfur standard under § 80.520(c) plus the total volume of any other diesel fuel (not including V_{15}, or diesel fuel that is dyed in accordance with § 80.520(b) at the refinery or import facility where the diesel fuel is produced or imported) represented as having a sulfur content not exceeding 500 ppm.

$V_t = V_{15} + V_{500}$.

(3) Credits shall be generated and designated as follows:

(i) Credits shall be generated separately for each refinery of a refiner.

(ii) Credits shall be generated separately for each credit trading area (CTA), as defined in paragraph (a)(5) of this section, into which motor vehicle diesel fuel is imported by an importer.

(iii) Credits shall be designated separately by year of generation and by CTA of generation. In the case of a refiner, credits shall also be designated by refinery, and in the case of an importer, credits shall also be designated by port of import.

(iv) Credits may not be generated by both a foreign refiner and by an importer for the same motor vehicle diesel fuel.

EXHIBIT J

(4) Credits shall be generated by a foreign refiner as provided in § 80.620(c) and this section.

(5) For purposes of this subpart, the CTAs are:

(i) PADDs 1, 2, 3 and 4, as described in § 80.41(r), except as provided in paragraph (a)(5)(iv) of this section. The CTAs shall be designated as CTA 1, 2, 3, and 4, respectively, and correspond to PADD 1, 2, 3, and 4, respectively;

(ii) CTA 5 shall correspond to PADD 5, as described in § 80.41(r), except as provided in paragraphs (a)(5)(iii) and (iv) of this section;

(iii) The states of Hawaii and Alaska shall each be treated as a separate CTA and not a part of CTA 5. Alaska shall be CTA 6. Hawaii shall be CTA 7;

(iv) If any state (through a waiver of federal preemption under Section 211(c)(4) of the Clean Air Act, 42 U.S.C. 7545(c)(4)) implements a law or regulation that requires a greater volume of motor vehicle diesel fuel to meet a sulfur standard of less than or equal to 15 ppm than the volume that is required under this subpart, no motor vehicle diesel fuel produced in that state or imported directly into that state may generate credits under this subpart, effective on the implementation date of the sulfur program under the state statute or regulation that implements the more stringent state requirements.

(6) No credits may be generated under this paragraph (a) after December 31, 2009.

(7) No refinery may generate credits under both this paragraph (a) and under paragraph (e) of this section.

(b) *Generation of early credits from June 1, 2001 through May 31, 2005.* (1) Beginning June 1, 2001, a refiner or importer may generate one credit for each gallon of motor vehicle diesel fuel meeting the sulfur content standard in § 80.520(a)(1) that is used in vehicles with engines that are certified to meet the model year 2007 heavy duty engine PM standard under 40 CFR 86.007–11, or vehicles with retrofit technologies that achieve emission levels equivalent to the 2007 NO_X or PM emission standard verified as part of a retrofit program administered by EPA or a state. Such refiners and importers must comply with the requirements of paragraphs (b) and (d) of this section.

(2)(i) Any refiner or importer planning to generate credits under this paragraph must provide notice of intent to generate early credits at least 120 calendar days prior to the date it begins generating credits under this paragraph by submitting such notice to Attn: Early Diesel Credits Notice, at the address in § 80.595.

(ii) The notice shall include a detailed plan that demonstrates that the motor vehicle diesel fuel meeting the 15 ppm sulfur standard of § 80.520(a)(1) for which credits are generated under this paragraph will be used in vehicles with engines that are certified to meet the model year 2007 heavy duty engine PM standard under 40 CFR 86.007–11 or in vehicles with retrofit technologies that achieve emission levels equivalent to the 2007 NO_X or PM emission standard verified as part of a retrofit program administered by EPA or a state. The notice must include the refiner's or importer's detailed plan for ensuring that all motor vehicle diesel fuel that generates early credits under this paragraph will be segregated from all other motor vehicle diesel fuel not meeting the sulfur standard under § 80.520(a)(1), from the refinery or import facility to its ultimate use in motor vehicles.

(3) No credits may be generated under this paragraph (b) after May 31, 2005.

(4) A refiner or importer may generate credits under this paragraph and also generate credits under paragraph (a) of this section, and a small refiner, as defined under § 80.550, may generate credits under this paragraph (b) and paragraph (e) of this section.

(c) *Generation of early credits from June 1, 2005 through May 31, 2006.* (1) Beginning June 1, 2005, a refiner or importer may generate one credit for each gallon of motor vehicle diesel fuel that is dispensed at retail outlets or at wholesale-purchaser consumer facilities exclusively as motor vehicle diesel fuel meeting the 15 ppm sulfur standard in § 80.520(a)(1). Such refiners and importers must comply with the requirements of this paragraph (c) and paragraph (d) of this section.

(2)(i) Any refiner or importer planning to generate credits under this paragraph must provide notice of intent to generate early credits at least 120 calendar days prior to the date it begins generating credits under this paragraph (c).

(ii) The notice shall include a detailed plan that demonstrates that the motor vehicle diesel fuel meeting the sulfur standard under § 80.520(a)(1) will be dispensed exclusively at retail outlets or at wholesale-purchaser consumer facilities as 15 ppm sulfur content motor vehicle diesel fuel. The plan must demonstrate that the refiner or importer will assure that all motor vehicle diesel fuel that generates early credits under this paragraph (c) will be segregated from all other motor vehicle diesel fuel from the refinery or import facility to its ultimate use in motor vehicles.

(3) No credits may be generated under this paragraph after May 31, 2006.

(4) A refiner or importer may generate credits under this paragraph (c) and also generate credits under paragraph (a) of this section, and a small refiner, as defined under § 80.550, may generate credits under this paragraph (c) and paragraph (e) of this section.

(d) *Additional requirements for early credits.* Early credits generated under paragraphs (b) and (c) of this section are subject to the following additional requirements:

(1) The designation requirements of § 80.523, and all recordkeeping and annual reporting requirements of §§ 80.592, 80.593 and 80.594.

(2) Credits generated under paragraphs (b) and (c) of this section shall be generated separately by CTA as defined in paragraph (a)(5) of this section and must be designated by CTA of generation, and by the refiner and refinery, or by importer and port of import, as applicable.

(3) Credits may not be generated for the same fuel by both a foreign refiner and an importer.

(4) The plan under paragraph (b)(2)(ii) or (c)(2)(ii) of this section must include provisions to include information on product transfer documents and on pump stands dispensing the fuel identifying the fuel as 15 ppm sulfur content motor vehicle diesel fuel. The plan must also identify the specific retail outlets or wholesale purchaser-consumer facilities that the fuel will be provided to. The Administrator may require a refiner or importer to submit additional information, as needed.

(5) In addition to the reporting requirements under paragraph (d)(1) of this section, the refiner or importer must submit a report to the Administrator no later than the last day of February for the prior calendar year period (or for the period June 1, 2001 through December 31, 2001, the period June 1, 2005 through December 31, 2005, or the period January 1, 2006 through May 31, 2006, as applicable) demonstrating that all the motor vehicle diesel fuel produced or imported for which credits were generated met the applicable requirements of paragraph (b), (c), or (d)(4) of this section. If the Administrator finds that such credits did not in fact meet the requirements of paragraphs (b)(1) and (c)(1) of this section, as applicable, or if the Administrator determines that there is insufficient information to determine the validity of such credits, the Administrator may deny the credits submitted in whole or in part.

(e) *Credits generated by small refiners.* (1) Notwithstanding the provisions of paragraph (a) of this section, a small refiner that is approved by the EPA as

EXHIBIT J

a small refiner under § 80.551(g) may generate credits under § 80.552(b). Such a small refiner may generate one credit for each gallon of motor vehicle diesel fuel produced that is designated under § 80.523 as subject to the 15 ppm sulfur standard under § 80.520(a)(1).

(2)(i) Credits may be generated under this paragraph (e) and § 80.552(b) only during the compliance periods beginning June 1, 2006 and ending on May 31, 2010. Credits shall be designated separately by refinery, separately by CTA of generation, and separately by annual compliance period. The annual compliance period for 2006 shall be June 1, 2006 through December 31, 2006. The annual compliance period for 2010 shall be January 1, 2010 through May 31, 2010.

(ii) The small refiner must meet the requirements of paragraphs (d)(1), (d)(2) and (d)(3) of this section, and the recordkeeping and reporting requirements of §§ 80.592, 80.593 and 80.594.

(iii) In addition, a foreign refiner that is approved by the Administrator to generate credits under § 80.552(b) shall comply with the requirements of § 80.620.

§ 80.532 How are credits used and transferred?

(a) *Credit use.* Credits generated under § 80.531 may be used to meet the volume limit of § 80.530(a)(3) provided that:

(1) The credits were generated and reported according to the requirements of this subpart; and

(2) The requirements of paragraphs (b), (c), (d), and (e) of this section are met.

(b) Credits generated under § 80.531 may be used by a refinery or by an importer to comply with section 80.530 by applying one credit for every gallon of motor vehicle diesel fuel needed to meet compliance with the volume limit of § 80.530(a)(3).

(c) Credits generated may be banked for use or transfer in a later compliance period or may be transferred to another refinery or importer for use as provided in paragraph (d) of this section.

(d) *Credit transfers.* (1) Credits obtained from another refinery or from another importer, including early credits and small refiner credits as described in § 80.531 (b), (c) (d), and (e), may be used to satisfy the volume limit of § 80.530(a)(3) if all the following conditions are met:

(i) The credits were generated in the same CTA as the CTA in which credits are used to achieve compliance;

(ii) The credits are used in compliance with the time period limitations for credit use in this subpart;

(iii) Any credit transfer takes place no later than the last day of February following the compliance period when the credits are used;

(iv) No credit may be transferred more than twice, as follows: The first transfer by the refiner or importer who generated the credit may only be made to a refiner or importer who intends to use the credit; if the transferee cannot use the credit, it may make a second and final transfer only to a refiner or importer who intends to use the credit. In no case may a credit be transferred more than twice before being used or terminated;

(v) The credit transferor must apply any credits necessary to meet the transferor's annual compliance requirements before transferring credits to any other refinery or importer;

(vi) No credits may be transferred that would result in the transferor having a negative credit balance; and

(vii) Each transferor must supply to the transferee records indicating the year the credits were generated, the identity of the refiner (and refinery) or importer who generated the credits, the CTA of credit generation, and the identity of the transferring party, if it is not the same party who generated the credits.

(2) In the case of credits that have been calculated or created improperly, or are otherwise determined to be invalid, the following provisions apply:

(i) Invalid credits cannot be used to achieve compliance with the transferee's volume requirements regardless of the transferee's good faith belief that the credits were valid.

(ii) The refiner or importer who used the credits, and any transferor of the credits, must adjust their credit records, reports and compliance calculations as necessary to reflect the proper credits.

(iii) Any properly created credits existing in the transferor's credit balance after correcting the credit balance, and after the transferor applies credits as needed to meet the compliance requirements at the end of the compliance period, must first be applied to correct the invalid transfers before the transferor trades or banks the credits.

(e) *Limitations on credit use.* (1) Credits may not be used to achieve compliance with any requirements of this subpart other than the volume limit of § 80.530(a)(3), unless specifically approved by the Administrator pursuant to a hardship relief petition under § 80.560 or § 80.561.

(2) A refiner or importer possessing credits must use all credits in its possession prior to applying the credit deficit provisions of § 80.530(a)(6).

(3) No credits may be used to meet compliance with this subpart subsequent to the compliance period ending May 31, 2010.

§§ 80.533–80.539 [Reserved]

Geographic Phase-In Provisions

§ 80.540 How may a refiner be approved to produce gasoline under the GPA gasoline sulfur standards in 2007 and 2008?

(a) A refiner that has been approved by EPA under § 80.217 for the geographic phase-in area (GPA) gasoline sulfur content standards under § 80.216 may apply to EPA for approval to produce gasoline subject to the GPA standards in 2007 and 2008. Such application shall be submitted to EPA, at the address provided in § 80.595(b), by December 31, 2001. A foreign refiner must apply under the provisions of paragraph (n) of this section.

(b) The refiner must submit an application in accordance with the provisions of §§ 80.595 and 80.596. The application must also include information, as provided in § 80.594(c), demonstrating that starting no later than June 1, 2006, all motor vehicle diesel fuel produced by the refinery for United States use will comply with the 15 ppm sulfur content standard under § 80.520(a)(1), and that the volume of motor vehicle diesel fuel produced will comply with the volume requirements of paragraph (e) of this section.

(c) The Administrator may approve a refiner's application to produce gasoline subject to the GPA gasoline sulfur content standards in 2007 and 2008 if the provisions of paragraph (b) of this section are satisfied. In approving an application, the Administrator shall establish a motor vehicle diesel fuel volume baseline under §§ 80.595 and 80.596.

(d) Starting June 1, 2006, and continuing through December 31, 2008, all motor vehicle diesel fuel produced by a refiner that has been approved under paragraph (c) of this section to produce gasoline subject to the GPA gasoline sulfur content standards in 2007 and 2008, must be accurately designated under § 80.523 as meeting the 15 ppm sulfur content standard of § 80.520(a)(1).

(e) The total volume of motor vehicle diesel fuel produced for use in the United States and designated as meeting the 15 ppm sulfur content standard under paragraph (d) of this section must meet or exceed 85% of the baseline volume established under paragraph (c) of this section, except that for the year

EXHIBIT J

2006, the total volume must meet or exceed 50% of the baseline volume.

(f) Compliance with the volume requirements in paragraph (e) of this section shall be determined on a calendar year basis, except that for the year 2006 compliance shall be determined for the period June 1, 2006 through December 31, 2006.

(g) If a refiner fails to comply with the requirements of paragraph (d) of this section, or if the approval of the application, including the baseline, was based on false or inaccurate information, the approval to produce gasoline subject to the GPA gasoline sulfur content standards under this section during the years 2007 and 2008 shall be void ab initio, and gasoline produced for use in the GPA must meet the gasoline sulfur content standards of subpart H of this Part as if there had been no approval to produce gasoline subject to the GPA gasoline sulfur content standards in 2007 and 2008.

(h) If for any compliance period a refiner fails to meet the volume requirements in paragraph (e) of this section, the approval to produce gasoline subject to the GPA gasoline sulfur content standards shall be void for that compliance period and for all succeeding compliance periods, and gasoline produced for use in the GPA must meet the gasoline sulfur standards under subpart H of this subpart as if there had been no approval to produce gasoline subject to the GPA gasoline sulfur content standards under this section in 2007 and 2008.

(i) A refiner that is approved for production of gasoline subject to the GPA gasoline sulfur standards under this section in 2007 and 2008 must meet all applicable recordkeeping and reporting requirements of §§ 80.592, 80.593, and 80.594, and shall meet all the recordkeeping and reporting requirements under §§ 80.219, 80.365 and 80.370.

(j) A refiner approved to produce gasoline subject to the GPA gasoline sulfur standards under this section in 2007 and 2008 may not generate or use credits under § 80.531(a) or (e), or § 80.532 unless the approval is vacated as provided in paragraph (k) of this section.

(k) A refiner may petition the Administrator to vacate approval to produce gasoline subject to the GPA gasoline sulfur content standards in 2007 and 2008. EPA may grant such a petition, effective January 1 of the compliance period following EPA's receipt of such petition (or effective June 1, in 2006, if applicable). Upon such effective date and thereafter, gasoline produced for use in the GPA must meet the gasoline sulfur content standards under subpart H of this Part as if there had been no approval to produce gasoline subject to the GPA gasoline sulfur content standards under this section in 2007 and 2008. Upon such effective date, the refiner shall not be subject to the requirements of this section.

(l) The provisions of this section shall apply separately for each refinery of a refiner.

(m) If any refinery is approved for production of gasoline subject to GPA gasoline sulfur content standards under this section in 2007 and 2008, the GPA downstream gasoline sulfur standard under § 80.220(a)(2) shall apply as follows:

(1) During the period of February 1, 2005 through January 31, 2009, the sulfur content of GPA gasoline at any downstream location other than at a retail outlet or wholesale purchaser-consumer facility shall not exceed 326 ppm.

(2) During the period of March 1, 2005 through February 28, 2009, the sulfur content of GPA gasoline at any downstream location shall not exceed 326 ppm.

(n) A foreign refiner may apply to the Administrator to produce gasoline that is subject to the gasoline sulfur standards for GPA gasoline under § 80.216 for the compliance years 2007 and 2008. Such application must be submitted to the EPA, at the address in § 80.595(b), by December 31, 2001.

(1) The Administrator may approve such interim GPA gasoline sulfur standards for the foreign refiner provided that the foreign refiner applies for a gasoline sulfur baseline under paragraph (n)(2) of this section and complies with:

(i) The requirements of paragraphs (b) through (l) of this section;

(ii) The requirements for the import of motor vehicle diesel fuel under § 80.620; and

(iii) All applicable gasoline requirements for refiners under subpart H of this Part, including the foreign refiner requirements under § 80.410, the attest requirements of § 80.415, the recordkeeping and reporting requirements of §§ 80.365 and 80.370, the designation and product transfer document requirements of § 80.219, the sampling and testing requirements of § 80.330, and the sample retention requirements of § 80.335.

(2) The refiner must submit an application for a gasoline sulfur baseline under the provisions of §§ 80.216(a), 80.295, and 80.410(b).

(3) After review of the foreign refiner's individual refinery gasoline sulfur baseline, its individual refinery motor vehicle diesel fuel baseline, and other information submitted with the application, the Administrator may approve such baselines and the application for GPA gasoline sulfur standards for 2007 and 2008.

(o) An importer is not eligible for approval to import gasoline subject to the GPA standards in 2007 or 2008 under this section.

§§ 80.541—80.549 [Reserved]

Small Refiner Hardship Provisions

§ 80.550 What is the definition of a small refiner under this subpart?

(a) A small refiner is defined as any person, as defined by 42 U.S.C. 7602(e), who:

(1) Produces diesel fuel at a refinery by processing crude oil through refinery processing units;

(2) Employed an average of no more than 1,500 people, based on the average number of employees for all pay periods from January 1, 1999, to January 1, 2000; and

(3) Had an average crude capacity less than or equal to 155,000 barrels per calendar day (bpcd) for 1999.

(b) For the purpose of determining the number of employees and crude capacity under paragraph (a) of this section, the refiner shall include the employees and crude capacity of any subsidiary companies, any parent company and subsidiaries of the parent company in which the parent has 50% or greater ownership, and any joint venture partners.

(c) The definition under paragraph (a) of this section applies to domestic and foreign refiners. For any refiner owned by a governmental entity, the number of employees as specified in paragraph (a) of this section shall include all employees and total crude capacity of the government of which the governmental entity is a part.

(d) Notwithstanding the provisions of paragraph (a) of this section, a refiner that acquires a refinery after January 1, 2000, or reactivates a refinery that was shutdown or was non-operational between January 1, 1999, and January 1, 2000, may apply for small refiner status in accordance with the provisions of § 80.551(c)(1)(ii).

(e) *Ineligible parties.* The following are ineligible for the small refiner provisions:

(1) Refiners or refineries built or started up after January 1, 2000;

(2) Persons who exceed the employee or crude oil capacity criteria under this section on January 1, 2000, but who meet these criteria after that date, regardless of whether the reduction in

EXHIBIT J

employees or crude oil capacity is due to operational changes at the refinery or a company sale or reorganization;

(3) Importers; and

(4) Refiners who produce motor vehicle diesel fuel other than by processing crude oil through refinery processing units.

(f)(1) Refiners who qualify as small refiners under this section and who subsequently employ more than 1500 people as a result of merger with or acquisition of another entity, are disqualified as small refiners. If this occurs, the refiner shall notify EPA in writing no later than 20 days following this disqualifying event.

(2) Any refiner whose status changes under this paragraph shall comply with the sulfur standard of § 80.520(a)(1) beginning January 1 of the calendar year following the disqualifying event in paragraph (f)(1) of this section.

(g) Notwithstanding the criteria in paragraph (a) of this section, any small refiner that has been approved by EPA as a small refiner under § 80.235 and meets the criteria of paragraph (a)(1) of this section, will be considered a small refiner under this section as well, for as long as they are a small refiner under § 80.225. The provisions of paragraph (f) of this section apply to any such refiner.

§ 80.551 How does a refiner obtain approval as a small refiner under this subpart?

(a)(1) Applications for small refiner status must be submitted to EPA by December 31, 2001 as part of the refiner's registration under § 80.597.

(2) In the case of a refiner who acquires a refinery after January 1, 2000, or reactivates a refinery that was shutdown between January 1, 1999, and January 1, 2000, the application for small refiner status must be submitted to EPA by June 1, 2003.

(b) Applications for small refiner status must be sent via certified mail with return receipt or express mail with return receipt to: U.S. EPA–Attn: Diesel Small Refiner Status (6406J), 1200 Pennsylvania Avenue, NW (6406J), Washington, DC 20460 (certified mail/return receipt) or Attn: Diesel Small Refiner Status, Transportation and Regional Programs Division,501 3rd Street, NW (6406J), Washington, DC 20001 (express mail/return receipt).

(c) The small refiner status application must contain the following information for the company seeking small refiner status, plus any subsidiary companies, any parent company and subsidiaries of the parent company in which the parent has 50% or greater ownership, and any joint venture partners:

(1)(i) A listing of the name and address of each location where any employee worked during the 12 months preceding January 1, 2000; the average number of employees at each location based upon the number of employees for each pay period for the 12 months preceding January 1, 2000; and the type of business activities carried out at each location; or

(ii) In the case of a refiner who acquires a refinery after January 1, 2000, or reactivates a refinery that was shutdown between January 1, 1999, and January 1, 2000, a listing of the name and address of each location where any employee of the refiner worked since the refiner acquired or reactivated the refinery; the average number of employees at any such acquired or reactivated refinery during each calendar year since the refiner acquired or reactivated the refinery; and the type of business activities carried out at each location.

(2) The total corporate crude capacity of each refinery as reported to the Energy Information Administration (EIA) of the U.S. Department of Energy (DOE) for the most recent 12 months of operation. The information submitted to EIA is presumed to be correct. In cases where a company disagrees with this information, the company may petition EPA with appropriate data to correct the record when the company submits its application for small refiner status. EPA may accept such alternate data at its discretion.

(3) An indication of whether the refiner, for each refinery, is applying for:

(i) The ability to produce motor vehicle diesel fuel subject to the 500 ppm sulfur content standard under § 80.520(c) or generate credits under § 80.531, pursuant to the provisions of § 80.552(a) or (b); or

(ii) An extension of the duration of its small refiner gasoline sulfur standard under § 80.553, pursuant to the provisions of § 80.552(c).

(4) A letter signed by the president, chief operating or chief executive officer of the company, or his/her designee, stating that the information contained in the application is true to the best of his/her knowledge.

(5) Name, address, phone number, facsimile number and e-mail address (if available) of a corporate contact person.

(d) For joint ventures, the total number of employees includes the combined employee count of all corporate entities in the venture.

(e) For government-owned refiners, the total employee count includes all government employees.

(f) Approval of small refiner status for refiners who apply under § 80.550(d) will be based on all information submitted under paragraph (c) of this section, except as provided in § 80.550(d).

(g) EPA will notify a refiner of approval or disapproval of small refiner status by letter. If disapproved, the refiner must comply with the sulfur standard in § 80.520, except as otherwise provided in this subpart.

(h) If EPA finds that a refiner provided false or inaccurate information on its application for small refiner status, upon notice from EPA the refiner's small refiner status will be void ab initio.

(i) Upon notification to EPA, an approved small refiner may withdraw its status as a small refiner. Effective on January 1 of the year following such notification, the small refiner will become subject to the sulfur standard of § 80.520 unless one of the hardship provisions of this subpart apply.

§ 80.552 What compliance options are available to small refiners?

(a) A refiner that has been approved by EPA as a small refiner under § 80.551(g) may produce motor vehicle diesel fuel subject to the 500 ppm sulfur content standard pursuant to the provisions of § 80.530, except that the volume limits of § 80.530(a)(3) shall only apply to that volume V^{500} of diesel fuel that is produced or imported during a calendar year that exceeds 105% of the baseline volume established under § 80.595. The calendar year period shall be from January 1st through December 31st. For the period June 1, 2006 through December 31, 2006, the volume limits shall only apply to that volume VV^{500} that exceeds 60% of the baseline volume.

(b) A refiner that has been approved by EPA as a small refiner under § 80.551(g) may generate motor vehicle diesel fuel credits pursuant to the provisions of § 80.531, except that for purposes of § 80.531(a) the term Credit shall equal VV^{15}, without further adjustment.

(c) A refiner that has been approved by EPA as a small refiner under § 80.551(g) may apply for an extension of the duration of its small refiner gasoline sulfur standards pursuant to § 80.553.

(d) A refiner that produces motor vehicle diesel fuel under the provisions of paragraph (a) of this section or generates credits under the provisions of paragraph (b) of this section may not receive an extension of its small refiner gasoline sulfur standard under the provisions of paragraph (c) of this section. A refiner that receives an extension of its small refiner gasoline

EXHIBIT J

sulfur standard under the provisions of paragraph (c) of this section may not produce motor vehicle diesel fuel under the provisions of paragraph (a) of this section and may not generate credits under the provisions of paragraph (b) of this section.

(e) The provisions of this section shall apply separately for each refinery owned or operated by a small refiner.

§ 80.553 Under what conditions may the small refiner gasoline sulfur standards be extended for a small refiner of motor vehicle diesel fuel?

(a) A refiner that has been approved by EPA for small refiner gasoline sulfur standards under § 80.240 may apply, under § 80.551, for an extension of the duration of its small refiner gasoline sulfur standards through the calendar year 2010 annual averaging period.

(b) As part of its application, the refiner must submit an application for a motor vehicle diesel fuel baseline in accordance with the provisions of §§ 80.595 and 80.596. The application must also include information, as provided in § 80.594, demonstrating that starting no later than June 1, 2006, all motor vehicle diesel fuel produced by the refiner will comply with the 15 ppm sulfur content standard under § 80.520(a)(1), and that the volume of motor vehicle diesel fuel produced will comply with the volume requirements of paragraph (e) of this section.

(c) The Administrator may approve an application for extension of the small refiner gasoline sulfur standards if the provisions of paragraph (b) of this section and §§ 80.595 and 80.596 are satisfied. In approving an application for extension, the Administrator shall establish a motor vehicle diesel fuel volume baseline under §§ 80.595 and 80.596.

(d) Beginning June 1, 2006, and continuing through December 31, 2010, all motor vehicle diesel fuel produced by a refiner that has received an extension of its small refiner gasoline sulfur standards under this section must be accurately designated under § 80.523 as meeting the 15 ppm sulfur content standard under § 80.520(a)(1).

(e) The total volume of motor vehicle diesel fuel produced for use in the United States and designated as meeting the 15 ppm sulfur content standard under paragraph (d) of this section must meet or exceed 85% of the baseline volume established under paragraph (c) of this section, except that for the year 2006, the total volume must meet or exceed 50% of the baseline volume.

(f) Compliance with the volume requirements in paragraph (e) of this section shall be determined on a calendar year basis, except that for the year 2006 compliance shall be determined for the period June 1, 2006 through December 31, 2006.

(g) If a refiner fails to comply with the requirements of paragraph (d) of this section, or if approval of the application, including the baseline, was based on false or inaccurate information, the extension of the applicable small refiner gasoline sulfur standards under this section shall be void ab initio, and all gasoline produced by the refinery must meet the gasoline sulfur standards under subpart H of this Part as if there had been no extension of the small refiner gasoline sulfur standards.

(h) If for any compliance period a refiner fails to meet the volume requirements in paragraph (e) of this section, the extension of the small refiner gasoline sulfur standards shall be void for that compliance period and for all succeeding compliance periods and all gasoline produced by the refinery must meet the gasoline sulfur standards under subpart H of this part as if there had been no extension of the small refiner gasoline sulfur standards under this section for such compliance periods.

(i) A refiner that is approved for an extension of the interim small refiner gasoline sulfur standards under this section must meet all applicable recordkeeping and reporting requirements of §§ 80.592, 80.593, and 80.594, and shall meet all the recordkeeping and reporting requirements under §§ 80.210, 80.365 and 80.370. Any foreign refiner shall meet all additional requirements under §§ 80.620 and 80.410.

(j) A refiner approved for the small refiner gasoline sulfur standards extension under this section may not generate or use credits under § 80.531(a) or (e), or § 80.532.

(k) A refiner may petition the Administrator to vacate an extension of the small refiner gasoline sulfur content standards. EPA may grant such a petition, effective January 1 of the compliance period following receipt of such petition (or effective June 1, 2006, if applicable). Upon such effective date, all gasoline produced by the refiner must meet the gasoline sulfur content standards under subpart H of this Part as if there had been no extension of the small refiner gasoline sulfur content standards under this section. Upon such effective date, the refiner shall not be subject to the requirements of this section.

(l) The provisions of this section shall apply separately for each refinery of a refiner.

§§ 80.554–80.559 [Reserved]

Other Hardship Provisions

§ 80.560 How can a refiner seek temporary relief from the requirements of this subpart in case of extreme hardship circumstances?

(a) EPA may, at its discretion, grant a refiner, for one or more of its refineries, temporary relief from some or all of the provisions of this subpart. Such relief shall be no less stringent than the small refiner compliance options specified in § 80.552. EPA may grant such relief provided that the refiner demonstrates that:

(1) Unusual circumstances exist that impose extreme hardship and significantly affect the refiner's ability to comply by the applicable date; and

(2) It has made best efforts to comply with the requirements of this subpart.

(b) Applications must be submitted to EPA by June 1 2002 to the following address: Applications for small refiner status must be sent via certified mail with return receipt or express mail with return receipt to: U.S. EPA-Attn: Diesel Hardship (6406J), 1200 Pennsylvania Avenue, NW (6406J), Washington, DC 20460 (certified mail/return receipt) or Attn: Diesel Hardship, Transportation and Regional Programs Division, 501 3rd Street, NW (6406J), Washington, DC 20001 (express mail/return receipt). EPA reserves the right to deny applications for appropriate reasons, including unacceptable environmental impact. Approval to distribute motor vehicle diesel fuel not subject to the 15 ppm sulfur standard may be granted for such time period as EPA determines is appropriate, but shall not extend beyond May 31, 2010.

(c) Applications must include a plan demonstrating how the refiner will comply with the requirements of this subpart as expeditiously as possible. The plan shall include a showing that contracts are or will be in place for engineering and construction of desulfurization equipment a plan for applying for and obtaining any permits necessary for construction or operation, projected timeline for beginning and completing construction, and for beginning actual operation of such equipment, and a description of plans to obtain necessary capital, and a detailed estimate of when the requirements of this subpart will be met.

(d) Applicants must provide, at a minimum, the following information:

(1) Detailed description of efforts to obtain capital for refinery investments and efforts made to obtain credits for compliance under § 80.531;

(2) Bond rating of entity that owns the refinery (in the case of joint ventures,

EXHIBIT J

include the bond rating of the joint venture entity and the bond ratings of all partners; in the case of corporations, include the bond ratings of any parent or subsidiary corporations); and

(3) Estimated capital investment needed to comply with the requirements of this subpart by the applicable date.

(e) In addition to the application requirements of paragraph (b) of this section, a refiner's application for temporary relief under this paragraph must also include a compliance plan. Such compliance plan shall demonstrate how the refiner will engage in a quality assurance testing program to ensure that its motor vehicle diesel fuel subject solely to the sulfur standards under § 80.520(c) has not caused motor vehicle diesel fuel subject to the 15 ppm standard § 80.520(a)(1) to fail to comply with that standard. The quality assurance program must at least include periodic sampling and testing at the party's own facilities and at downstream facilities in the refiner's or importer's diesel fuel distribution system, to determine compliance with the applicable sulfur standards for both categories of motor vehicle diesel fuel; examination at the party's own facilities and at applicable downstream facilities, of product transfer documents to confirm appropriate transfers and deliveries of both products; and inspection of retailer and wholesale purchaser-consumer pump stands for the presence of the labels and warning signs required under this section. Any violations that are discovered shall be reported to EPA within 48 hours of discovery.

(f) Applications under this section must be accompanied by:

(1) A letter signed by the president, chief operating or chief executive officer of the company, or his/her designee, stating that the information contained in the application is true to the best of his/her knowledge.

(2) The name, address, phone number, facsimile number and e-mail address of a corporate contact person.

(g) Applicants must also provide any other relevant information requested by EPA.

(h) Refiners who are granted a hardship relief standard for any refinery, and importers of fuel subject to temporary refiner relief standards, may not distribute the diesel fuel subject to the sulfur standard under § 80.520(c) for use in model year 2007 and later vehicles and must comply with all applicable provisions of this subpart, including the provisions of this subpart.

(i) EPA may impose any reasonable conditions on waivers under this section, including limitations on the refinery's volume of motor vehicle diesel fuel subject to a temporary refiner relief standards.

(j) The provisions of this section are available only to refineries that produce diesel fuel from crude.

(k) The individual refinery sulfur standard and the compliance plan will be approved or disapproved by the Administrator, and approval will be effective when the refiner (or importer, as applicable, in the case of compliance plans) receives an approval letter from EPA. If disapproved, the refiner or importer must comply with the motor vehicle diesel fuel standard under § 80.520(a)(1) by the appropriate compliance date specified in § 80.500.

(l) If EPA finds that a refiner provided false or inaccurate information on its application for small refiner status, upon notice from EPA the refiner's small refiner status will be void ab initio.

§ 80.561 How can a refiner or importer seek temporary relief from the requirements of this subpart in case of extreme unforseen circumstances?

In appropriate extreme, unusual, and unforseen circumstances (e.g., natural disaster or refinery fire) which are clearly outside the control of the refiner or importer and which could not have been avoided by the exercise of prudence, diligence and due care, EPA may permit a refiner or importer, for a brief period, to distribute motor vehicle diesel fuel which does not meet the requirements of this subpart if:

(a) It is in the public interest to do so (e.g., distribution of the nonconforming diesel fuel is necessary to meet projected shortfalls which cannot otherwise be compensated for);

(b) The refiner or importer exercised prudent planning and was not able to avoid the violation and has taken all reasonable steps to minimize the extent of the nonconformity;

(c) The refiner or importer can show how the requirements for motor vehicle diesel fuel will be expeditiously achieved;

(d) The refiner or importer agrees to make up any air quality detriment associated with the nonconforming motor vehicle diesel fuel, where practicable;

(e) The refiner or importer pays to the U.S. Treasury an amount equal to the economic benefit of the nonconformity minus the amount expended pursuant to paragraph (d) of this section, in making up the air quality detriment; and

(f) In the case of motor vehicle diesel fuel distributed under this section that does not meet the 15 ppm sulfur standard under § 80.520(a)(1), such diesel fuel shall not be distributed for use in model year 2007 or later motor vehicles, and must meet all the requirements and prohibitions of this subpart applicable to diesel fuel meeting the sulfur standard under § 80.520(c), or to diesel fuel that is not motor vehicle diesel fuel, as applicable.

§§ 80.562–80.569 [Reserved]

Labeling Requirements

§ 80.570 What labeling requirements apply to retailers and wholesale purchaser-consumers of motor vehicle diesel fuel?

(a) Any retailer or wholesale purchaser-consumer who sells, dispenses, or offers for sale or dispensing, motor vehicle diesel fuel subject to the 500 ppm sulfur standard of § 80.520(c), must prominently and conspicuously display in the immediate area of each pump stand from which motor vehicle fuel subject to the 500 ppm standard is offered for sale or dispensing, the following legible label, in block letters of no less than 36-point bold type, printed in a color contrasting with the background:

HIGH-SULFUR DIESEL FUEL—WARNING

May damage model year 2007 and later highway vehicles.

Federal Law *prohibits* use in these vehicles.

(b) Any retailer or wholesale purchaser-consumer who sells, dispenses, or offers for sale or dispensing, motor vehicle diesel fuel subject to the 15 ppm sulfur standard of § 80.520(a)(1), must affix the following conspicuous and legible label, in block letters of no less than 36-point bold type, and printed in a color contrasting with the background, to each pump stand:

LOW-SULFUR DIESEL FUEL

Recommended for use in all diesel vehicles.

Required for model year 2007 and later vehicles.

(c) Any retailer or wholesale purchaser-consumer who sells, dispenses, or offers for sale or dispensing, diesel fuel for nonroad equipment that does not meet the standards for motor vehicle diesel fuel, must affix the following conspicuous and legible label, in block letters of no less than 36-point bold type, and printed in a color contrasting with the background, to each pump stand:

NONROAD DIESEL FUEL—WARNING

May damage or destroy highway engines and their emission controls.

Federal Law *prohibits* use in any highway vehicle.

EXHIBIT J

(d) The labels required by paragraphs (a) through (c) of this section must be placed on the vertical surface of each pump housing and on each side with gallonage and price meters. The labels shall be on the upper two-thirds of the pump, in a location where they are clearly readable by the public.

§§ 80.571–80.579 [Reserved]

Sampling and Testing

§ 80.580 What are the sampling and testing methods for sulfur?

(a) *Diesel fuel and diesel fuel additives.* For purposes of §§ 80.520 and 80.521, the sulfur content of diesel and diesel fuel additives is to be determined in accordance with this section.

(1) *Sampling method.* The applicable sampling methodology provided in § 80.330(b).

(2) *Test method for sulfur.* (i) For diesel fuel and diesel fuel additives subject to the 15 ppm sulfur standard of § 80.520(a)(1), the American Society for Testing and Materials (ASTM) standard method D 6428–99, entitled ''Test Method for Total Sulfur in Liquid Aromatic Hydrocarbons and Their Derivatives by Oxidative Combustion and Electrochemical Detection.''

(ii) For diesel fuel and diesel fuel additives subject to the 500 ppm sulfur standard of 80.520(c), ASTM standard method D 2622–98, ''Standard Test Method for Sulfur in Petroleum Products by X-Ray Spectrometry.''

(3) *Alternative test methods for sulfur.* (i) For diesel fuel and diesel fuel additives subject to the 15 ppm standard of § 80.520(a)(1), sulfur content may be determined using ASTM D 5453–99, entitled ''Standard Test Method for Determination of Total Sulfur in Light Hydrocarbons, Motor Fuels and Oils by Ultraviolet Fluorescence,'' or ASTM D 3120–96, entitled ''Standard Test Method for Trace Quantities of Sulfur in Light Liquid Petroleum Hydrocarbons by Oxidative Microcoulometry,'' provided that the refiner or importer test result is correlated with the appropriate method specified in paragraph (a)(2) of this section.

(ii) For diesel fuel and diesel fuel additives subject to the 500 ppm standard of § 80.520(c), sulfur content may be determined using ASTM D 5453–99, ''Standard Test Method for Determination of Total Sulfur in Light Hydrocarbons, Motor Fuels and Oils by Ultraviolet Fluorescence,'' or ASTM D 6428–00, entitled ''Test Method for Total Sulfur in Liquid Aromatic Hydrocarbons and Their Derivatives by Oxidative Combustion and Electrochemical Detection,'' provided that the refiner or importer test result is correlated with the appropriate method specified in paragraph (a)(2) of this section.

(4) *Adjustment Factor for downstream test results.* An adjustment factor of negative 2 ppm shall be applied to the test results, to account for test variability, but only for testing of motor vehicle diesel fuel identified as subject to the 15 ppm sulfur standard of § 80.520(a)(1), at a downstream location as defined in § 80.500(f).

(b) *Incorporation by reference.* ASTM Standard Methods D 2622–98, ''Standard Test Method for Sulfur in Petroleum Products by Wavelength Dispersive X-ray Fluorescence Spectrometry,'' D 3120–96, ''Standard Test Method for Trace Quantities of Sulfur in Light Liquid Petroleum Hydrocarbons by Oxidative Microcoulometry,'' D 6428–99, ''Test Method for Total Sulfur in Liquid Aromatic Hydrocarbons and Their Derivatives by Oxidative Combustion and Electrochemical Detection,'' and D 5453–00, ''Standard Test Method for Determination of Total Sulfur in Light Hydrocarbons, Motor Fuels and Oils by Ultraviolet Fluorescence,'' are incorporated by reference. This incorporation by reference was approved by the Director of the Federal Register in accordance with 5 U.S.C. 552(a) and 1 CFR part 51. Copies may be obtained from the American Society for Testing and Materials, 100 Barr Harbor Dr., West Conshohocken, PA 19428–2959. Copies may be inspected at the Air Docket Section (LE–131), Room M–1500, U.S. Environmental Protection Agency, Docket No. A–99–06, 401 M Street, SW, Washington, DC 20460, or at the Office of the Federal Register, 800 North Capitol Street, NW, Suite 700, Washington, DC.

§§ 80.581–80.589 [Reserved]

Recordkeeping and Reporting Requirements

§ 80.590 What are the product transfer document requirements for motor vehicle diesel fuel?

On each occasion that any person transfers custody or title to motor vehicle diesel fuel, including distillates used or intended to be used as motor vehicle diesel fuel, except when such fuel is dispensed into motor vehicles at a retail outlet or wholesale purchaser-facility, the transferor must provide to the transferee documents identifying the fuel as motor vehicle diesel fuel, and which include the following information:

(a) The name and address of the transferor and transferee.

(b) The volume of motor vehicle diesel fuel which is being transferred.

(c) The location of the motor vehicle diesel fuel at the time of the transfer.

(d) The date of the transfer.

(e) Except as provided in 40 CFR 69.51, an accurate statement, as applicable, that:

(1) ''This fuel complies with the 15 ppm low sulfur standard for motor vehicle diesel fuel.'';

(2) ''This fuel complies with the 500 ppm high sulfur standard for motor vehicle diesel fuel and is for use only in MY 2006 and older diesel motor vehicles.'';

(3) ''This is high sulfur motor vehicle diesel fuel for use only in Guam, American Samoa, or the Northern Mariana Islands.'';

(4) ''This diesel fuel is for export use only.'';

(5) ''This diesel fuel is for research, development, or testing purposes only.'';

(6) ''This diesel fuel is for use in diesel vehicles having an EPA-approved national security exemption only.''.

(f) For motor vehicle diesel fuel that contains visible evidence of the dye solvent red 164, and is intended to be used in a manner that is tax-exempt as defined under section 4082 of the Internal Revenue Code, the following statement:

This fuel is motor vehicle diesel fuel for tax-exempt use only, in accordance with Section 4082 of the Internal Revenue Code.

(g) Except for transfers to truck carriers, retailers or wholesale purchaser-consumers, product codes may be used to convey the information required under this section if such codes are clearly understood by each transferee. Codes used to convey the statement in paragraph (e)(1) of this section must contain the number ''15'', and codes used to convey the statement in paragraph (e)(2) of this section must contain the number ''500''.

(h) Beginning June 1, 2001 and ending May 31, 2005, any transfer subject to this section, which is also subject to the early credit provisions of § 80.531(b), must comply with all applicable requirements of this section except those in paragraph (e) of this section.

(i) Beginning June 1, 2005 and ending May 31, 2006, any transfer subject to this section, which is also subject to the early credit requirements of § 80.531(c), must comply with all applicable requirements of this section.

§ 80.591 What are the product transfer document requirements for additives to be used in diesel fuel?

(a) Except as provided in paragraphs (b) and (d) of this section, on each

EXHIBIT J

occasion that any person transfers custody or title to a motor vehicle diesel fuel additive to a party in the additive distribution system or in the motor vehicle diesel fuel distribution system for use downstream of the diesel fuel refiner, the transferor must provide to the transferee documents which identify the additive, and:

(1) Identify the name and address of the transferor and transferee; the date of transfer; the location at which the transfer took place; the volume of additive transferred; and

(2) Indicates compliance with the 15 ppm sulfur standard by inclusion of the following statement:

The sulfur content of this diesel fuel additive does not exceed 15 ppm.

(b) On each occasion that any person transfers custody or title to a motor vehicle diesel fuel additive subject to the requirements of § 80.521(b), to a party in the additive distribution system or in the motor vehicle diesel fuel distribution system for use in diesel fuel downstream of the diesel fuel refiner, the transferor must provide to the transferee documents which identify the additive, and:

(1) Identify the name and address of the transferor and transferee; the date of transfer; the location at which the transfer took place; the volume of additive transferred.

(2) Indicate the high sulfur potential of the additive by inclusion of the following statement:

This motor vehicle diesel fuel additive may exceed the federal 15 ppm sulfur standard. Improper use of this additive may result in non-complying diesel fuel.

(3) Includes the following information:

(i) The additive's maximum sulfur concentration;

(ii) The maximum recommended concentration in volume percent for use of the additive in diesel fuel; and

(iii) The contribution to the sulfur level of the fuel, in ppm, that would result if the additive is used at the maximum recommended concentration.

(c) Except for transfers of motor vehicle diesel fuel additives to truck carriers, retailers or wholesale purchaser-consumers, product codes may be used to convey the information required under paragraphs (a) and (b) of this section, if such codes are clearly understood by each transferee. Codes used to convey the statement in paragraph (a)(2) of this section must contain the number ''15'' and codes used to convey the statement in paragraph (b)(2) of this section may not contain such number.

(d) For those motor vehicle diesel fuel additives which are sold in containers for use by the ultimate consumer of diesel fuel, each transferor must have displayed on the additive container, in a legible and conspicuous manner, either of the following statements, as applicable:

(1) ''This diesel fuel additive complies with the federal low sulfur content requirements for use in diesel motor vehicles.''; or

(2) For those additives sold in containers for use by the ultimate consumer, with a sulfur content in excess of 15 ppm: ''This diesel fuel additive does not comply with federal low sulfur content requirements for use in model year 2007 and newer diesel motor vehicles.''.

§ 80.592 What records must be kept?

(a) *Records that must be kept by parties in the motor vehicle diesel fuel and motor vehicle diesel fuel additive distribution systems.* Beginning June 1, 2006, or for a refiner the first compliance period in which the refiner is generating early credits under § 80.531(b) or (c), whichever is earlier, any person who produces, imports, sells, offers for sale, dispenses, distributes, supplies, offers for supply, stores, or transports motor vehicle diesel fuel subject to the provisions of this subpart, must keep the following records:

(1) The applicable product transfer documents required under §§ 80.590 and 80.591;

(2) For any sampling and testing for sulfur content, cetane index or aromatics content of motor vehicle diesel fuel or motor vehicle diesel fuel additives, conducted as part of a quality assurance program or otherwise:

(i) The location, date, time and storage tank or truck identification for each sample collected;

(ii) The name and title of the person who collected the sample and the person who performed the testing; and

(iii) The results of the tests for sulfur content (including where applicable the test results with and without application of the adjustment factor under § 80.580(a)(4)) or other standard content, and the volume of product in the storage tank or container from which the sample was taken;

(3) The actions the party has taken, if any, to stop the sale or distribution of any motor vehicle diesel fuel found not to be in compliance with the sulfur standards specified in this subpart, and the actions the party has taken, if any, to identify the cause of any noncompliance and prevent future instances of noncompliance.

(b) *Additional records to be kept by refiners and importers of motor vehicle diesel fuel subject to temporary refiner relief standards, small refiner standards, and early credit provisions.* Beginning June 1, 2006, or for a refiner the first compliance period in which the refiner is generating early credits under § 80.531(b) or (c), whichever is earlier, any refiner producing motor vehicle diesel fuel subject to the sulfur standard under § 80.520(a)(1), for each of its refineries, and any importer importing such motor vehicle diesel fuel, shall keep records that include the following information for each batch of motor vehicle diesel fuel produced or imported:

(1) The batch volume.

(2) The batch number, assigned under the batch numbering procedures under § 80.65(d)(3).

(3) The date of production or import.

(4) A record designating the batch as meeting the 500 ppm sulfur standard or the 15 ppm sulfur standard.

(5) For foreign refiners, the designations and other records required to be kept under § 80.620.

(6) In the case of importers, the designations and other records required under § 80.620(o).

(7) Information regarding credits, kept separately for each calendar year compliance period, kept separately for each refinery and in the case of importers, kept separately for imports into each CTA, as follows:

(i) The number of credits in the refiner's or importer's possession at the beginning of the calendar year;

(ii) The number of credits generated;

(iii) The number of credits used;

(iv) If any were obtained from or transferred to other parties, for each such other party, its name, its EPA refiner or importer registration number consistent with § 80.593(d), in the case of credits generated by an importer the port and CTA of import of the diesel fuel that generated the credits, and the number obtained from, or transferred to, the other party;

(v) The number in the refiner's or importer's possession that will carry over into the subsequent calendar year compliance period; and

(vi) Commercial documents that establish each transfer of credits from the transferor to the transferee.

(8) The calculations used to determine compliance with the volume requirements of this subpart.

(9) The calculations used to determine the number of credits generated.

(10) A copy of reports submitted to EPA under § 80.593.

(c) *Additional records importers must keep.* Any importer shall keep records

EXHIBIT J

that identify and verify the source of each batch of certified diesel fuel program foreign refiner (DFR)-Diesel and non-certified DFR-Diesel imported and demonstrate compliance with the requirements under § 80.620.

(d) *Length of time records must be kept.* The records required in this section shall be kept for five years from the date they were created, except that records relating to credit transfers shall be kept by the transferor for 5 years from the date the credits were transferred, and shall be kept by the transferee for 5 years from the date the credits were transferred, used or terminated, whichever is later.

(e) *Make records available to EPA.* On request by EPA the records required in paragraphs (a), (b) and (c) of this section must be made available to the Administrator or the Administrator's authorized representative. For records that are electronically generated or maintained the equipment and software necessary to read the records shall be made available, or if requested by EPA, electronic records shall be converted to paper documents which shall be provided to the Administrator's authorized representative.

§ 80.593 What are the reporting and registration requirements for refiners and importers of motor vehicle diesel fuel subject to temporary refiner relief standards?

Beginning with 2006, or the first compliance period during which credits are generated under § 80.531(b) or (c), whichever is earlier, any refiner or importer who produces or importes motor vehicle diesel fuel subject to the 500 ppm sulfur standard under § 80.520(c), or any refiner or importer who generates, uses, obtains or transfers credits under §§ 80.530 through 80.532, and continuing for each year thereafter, must submit to EPA annual reports that contain the information required in this section, and such other information as EPA may require:

(a) *Refiners and importers.* Refiners and importers must report the following information separately for each refinery or CTA, in the case of importers, subject to a phase-in sulfur standard, small refiner standard or temporary refiner relief sulfur standard, or who generates, uses or transfers credits under §§ 80.530 through 80.532:

(1) The refiner's name and the EPA refinery registration number.

(2) For all motor vehicle diesel fuel produced for use in the United States during the compliance period:

(i) The total volume of motor vehicle diesel fuel produced;

(ii) The volume, in gallons, that complied with a sulfur content standard of 500 ppm; and

(iii) The volume, in gallons, that complied with the 15 ppm sulfur content standard.

(3) The percentage of the volume motor vehicle diesel fuel produced during the calendar year that met the 15 ppm sulfur standard and the percentage that met the 500 ppm sulfur standard prior to the application of any volume credits.

(4) The percentage of volume of motor vehicle diesel fuel produced meeting the 15 ppm sulfur standard after the inclusion of any credits.

(5) Information regarding credits, separately for each refinery and for credits or debits related to imported motor diesel fuel, separately by importer and separately by CTA of import as follows:

(i) The CTA of the refiner's refinery or the importer's or the foreign refiner's CTA and port of importation;

(ii) The number of credits at the beginning of the compliance period;

(iii) The number of credits generated;

(iv) The number of credits used;

(v) If any credits were obtained from or transferred to other refineries or import ports, for each other refinery or importer, its name, address (or Port) and CTA, EPA refinery or importer registration number, and the number of credits obtained from or transferred to the other refinery or importer (by import CTA);

(vi) The number of credits, if any, that will carry over to the subsequent compliance period; and

(vii) The number of credits in deficit that must be made up for the following year;

(6) The reporting requirements under § 80.620, if applicable.

(7) For each batch of motor vehicle diesel fuel produced or imported during the compliance period:

(i) The batch number assigned using the batch numbering conventions under § 80.65(d)(3) and the appropriate designation under § 80.523;

(ii) The date the batch was produced; and

(iii) The volume of the batch, in gallons.

(8) When submitting reports under this paragraph (a), any importer shall exclude certified DFR-Diesel.

(b) *Additional reporting requirements for importers.* Importers of motor vehicle diesel fuel subject to the 500 ppm sulfur standard must report the following information:

(1) The importer's name and EPA registration number.

(2) For each foreign refinery from which motor vehicle diesel fuel is imported that is subject to a sulfur standard under § 80.520(c), the importer must report, for each batch of diesel fuel imported, the information required to be reported under § 80.620(o).

(c) *Report submission.* Any annual report required by this section shall be:

(1) Signed and certified as meeting all the applicable requirements of this subpart by the owner or a responsible corporate officer of the refiner or importer; and

(2) Submitted to EPA no later than the last day of February for the prior calendar year period.

§ 80.594 What are the pre-compliance reporting requirements?

(a) Beginning on June 1, 2003, and on June 1, 2004 and June 1, 2005, all refiners and importers planning to produce or import motor vehicle diesel fuel subject to the provisions of this subpart, shall submit the following information to EPA:

(1) Any changes to the information submitted for the company registration;

(2) Any changes to the information submitted for any refinery or import facility registration;

(3) An estimate of the annual production or importation, in gallons, after June 1, 2006, for each refinery and import facility, of 15 ppm motor vehicle diesel fuel produced from crude oil and, if applicable, 500 ppm motor vehicle diesel fuel produced from crude oil, and the volumes of each grade of motor vehicle diesel fuel produced from other sources;

(4) If expecting to participate in the temporary compliance options provisions and the credit trading program, estimates of the number of credits to be generated and/or used each year the program is applicable;

(5) Information regarding engineering plans (e.g., design and construction), the status of obtaining any necessary permits, and capital commitments for making the necessary modifications to produce low sulfur motor vehicle fuel, and actual construction progress. The pre-compliance reports due 2004 and 2005 must provide an update of the progress in each of these areas.

(b) Beginning on June 1, 2003, all approved small refiners shall submit the following additional information to EPA, as applicable:

(1) In the case of a refinery with an approved application under § 80.552(a):

(i) A showing that sufficient sources of 15 ppm motor vehicle diesel fuel will likely be available in its marketing area after June 1, 2006 and through 2010;

(ii) If after 2003 the sources of 15 ppm motor vehicle diesel fuel decrease, the pre-compliance reports for 2004 and/or

EXHIBIT J

2005 must identify this change and must include a supplementary showing that the sources of 15 ppm motor vehicle diesel fuel are still sufficient.

(2) In case of a refinery with an approved application under § 80.552(c), a demonstration that by June 1, 2006 its motor vehicle diesel fuel will be at 15 ppm sulfur at a volume at least 85% of its baseline motor vehicle diesel fuel volume.

(c) For each refiner and importer approved under § 80.540, a demonstration that by June 1, 2006 all of its motor vehicle diesel fuel will be at 15 ppm sulfur at a volume of at least 85% of its baseline motor vehicle diesel fuel volume.

(d) By July 1, 2006, each refiner and importer of motor vehicle diesel fuel shall submit a report to EPA stating that the production or importation of 15 ppm sulfur motor vehicle diesel fuel commenced by June 1, 2006.

§ 80.595 How does a refiner apply for a motor vehicle diesel fuel volume baseline?

(a) Any small refiner applying for extension of the duration of its small refiner gasoline sulfur standards of § 80.240, under §§ 80.552(c) and 80.553, or any refiner applying for an extension of the duration of the GPA standards under § 80.540 must apply for a motor vehicle diesel fuel volume baseline by December 31, 2001. A separate volume baseline must be sought for each refinery for which application of the provisions of § 80.553 or § 80.540 is sought.

(b) The volume baseline must be sent via certified mail with return receipt or express mail with return receipt to: U.S. EPA-Attn: Diesel Baseline (6406J), 1200 Pennsylvania Avenue, NW (6406J), Washington, DC 20460 (certified mail/return receipt) or Attn: Diesel Baseline, Transportation and Regional Programs Division, 501 3rd Street, NW (6406J), Washington, DC 20001 (express mail/return receipt).

(c) The motor vehicle diesel fuel volume baseline application must include the following information:

(1) A listing of the names and addresses of all refineries owned by the refiner for which the refiner is applying for a motor vehicle diesel fuel volume baseline.

(2) The average annual volume (in gallons) of motor vehicle diesel fuel produced for U.S. use in 1998 and 1999, for each refinery for which the refiner is applying for such baseline, calculated in accordance with § 80.596. The refiner shall follow the procedures, applicable to volume baselines and using motor vehicle diesel fuel instead of gasoline, specified in §§ 80.91 through 80.93 to establish the volume of motor vehicle diesel fuel that was produced for U.S. use in 1998 and 1999 for purposes of establishing a volume baseline under this section.

(3) A letter signed by the president, chief operating, or chief executive officer of the company, or his/her delegate, stating that the information contained in the volume baseline determination is true to the best of his/her knowledge.

(4) Name, address, phone number, facsimile number, and e-mail address (if availabale) of a corporate contact person.

(5) The following information for each batch of motor vehicle diesel fuel produced for U.S. use in 1998 and 1999:

(i) Batch number assigned to the batch under procedures such as those in § 80.65(d) or § 80.101(i), or, if unavailable, such other identifying information as is available; and

(ii) Volume of the batch, in gallons.

(6) For a refinery that was not in operation during part or all of the period 1998 and 1999, the information required under this paragraph (c) for the motor vehicle diesel fuel produced for U.S. use during the most recent calendar year that the refinery was in operation after the refinery was reactivated.

(d) Within 120 days of receipt of an application under this section, EPA will notify the refiner of an approval of the refinery's baseline, or of any deficiencies in the application.

(e) If at any time the baseline submitted in accordance with the requirements of this section is determined to be incorrect, EPA will notify the refiner of the corrected baseline. The corrected baseline shall apply to all applicable compliance calculations under this subpart.

(f)(1) If insufficient information is available for the Administrator to establish a baseline under the provisions of paragraph (c) of this section and § 80.596(a), the refiner shall submit additional information sufficient for the Administrator to establish a baseline.

(2) To satisfy the requirements of paragraph (f)(1) of this section, the Administrator may require, and consider, any information pertinent to establish a baseline, including:

(i) Motor vehicle diesel fuel production volumes for other years;

(ii) Crude capacity of the refinery;

(iii) The ratio, or the typical ratio, for other similarly sized or configured refineries, between motor vehicle diesel fuel production and gasoline production.

§ 80.596 How is a refinery motor vehicle diesel fuel volume baseline calculated?

(a) For purposes of this subpart, a refinery's motor vehicle diesel fuel volume baseline is calculated using the following equation:

$$V_{Base} = \frac{\sum_{i=1}^{n}(V_i)}{m/12}$$

Where:

V_{Base} = Volume baseline value.

V_i = Volume of motor vehicle diesel fuel batch i.

n = Total number of batches of motor vehicle diesel fuel produced for U.S. use during January 1, 1998 through December 31, 1999 (or the total number of batches of motor vehicle diesel fuel produced during the most recent calendar year the refinery was in operation after being reactivated pursuant to § 80.595(c)(6)); or, for a foreign refinery, the total number of batches of motor vehicle diesel fuel produced and imported into the U.S. during January 1, 1998 through December 31, 1999 (or the total number of batches of motor vehicle diesel fuel produced and imported into the U.S. during the most recent calendar year the refinery was in operation after being reactivated pursuant to § 80.595(c)(6)).

i = Individual batch of motor vehicle diesel fuel produced during January 1, 1998 through December 31, 1999 (or individual batch of motor vehicle diesel fuel produced during the most recent calendar year the refinery was in operation after being reactivated pursuant to § 80.595(c)(6)); or, for a foreign refinery, individual batch of motor vehicle diesel fuel produced and imported into the U.S. during January 1, 1998 through December 31, 1999 (or individual batch of motor vehicle diesel fuel produced and imported into the U.S. during the most recent calendar year the refinery was in operation after being reactivated pursuant to § 80.595(c)(6)).

m = Number of months in the baseline period (24 except in the case of a startup or reactivation).

(b) If insufficient information is available for the Administrator to establish a baseline under paragraph (a) of this section, the baseline may be determined under the provisions of § 80.595(f).

§ 80.597 What are the registration requirements?

Refiners having any refinery that is subject to a sulfur standard under § 80.520(c), and importers importing such diesel fuel, must provide EPA the information under § 80.76 no later than December 31, 2001, if such information has not been provided under the provisions of this part. In addition, for each import facility, the same identifying information as required for each refinery under § 80.76(c) must be provided.

EXHIBIT J

§§ 80.598–80.599 [Reserved]

Exemptions

§ 80.600 What are the requirements for obtaining an exemption for motor vehicle diesel fuel used for research, development or testing purposes?

(a) *Written request for R&D exemption.* Any person may receive an exemption from the provisions of this subpart for motor vehicle diesel fuel used for research, development, or testing (''R&D'') purposes by submitting the information listed in paragraph (c) of this section to:

(1) Director (6406J), Transportation and Regional Programs Division, U.S. Environmental Protection Agency, Ariel Rios Building, 1200 Pennsylvania Avenue, NW., Washington, DC 20460 (postal mail); or

(2) Director (6406J), Transportation and Regional Programs Division, U.S. Environmental Protection Agency, 501 3rd Street, NW., Washington, DC 20001 (express mail/courier); and

(3) Director (2242A), Air Enforcement Division, U.S. Environmental Protection Agency, Ariel Rios Building, 1200 Pennsylvania Avenue, NW., Washington, DC 20460.

(b) *Criteria for an R&D exemption.* For an R&D exemption to be granted, the person requesting an exemption must:

(1) Demonstrate a purpose that constitutes an appropriate basis for exemption;

(2) Demonstrate that an exemption is necessary;

(3) Design an R&D program to be reasonable in scope; and

(4) Exercise a degree of control consistent with the purpose of the program and EPA's monitoring requirements.

(c) *Information required to be submitted.* To demonstrate each of the elements in paragraphs (b)(1) through (4) of this section, the person requesting an exemption must include the following information in the written request required under paragraph (a) of this section:

(1) A concise statement of the purpose of the program demonstrating that the program has an appropriate R&D purpose.

(2) An explanation of why the stated purpose of the program cannot be achieved in a practicable manner without performing one or more of the prohibited acts under this subpart.

(3) To demonstrate the reasonableness of the scope of the program:

(i) An estimate of the program's duration in time and, if appropriate, mileage;

(ii) An estimate of the maximum number of vehicles or engines involved in the program;

(iii) The manner in which the information on vehicles and engines used in the program will be recorded and made available to the Administrator upon request; and

(iv) The quantity of diesel fuel which does not comply with the requirements of §§ 80.520 through 80.525.

(4) With regard to control, a demonstration that the program affords EPA a monitoring capability, including:

(i) The site(s) of the program (including facility name, street address, city, county, state, and zip code);

(ii) The manner in which information on vehicles and engines used in the program will be recorded and made available to the Administrator upon request;

(iii) The manner in which information on the diesel fuel used in the program (including quantity, fuel properties, name, address, telephone number and contact person of the supplier, and the date received from the supplier), will be recorded and made available to the Administrator upon request;

(iv) The manner in which the party will ensure that the R&D fuel will be segregated from motor vehicle diesel fuel and fuel pumps will be labeled to ensure proper use of the R&D diesel fuel;

(v) The name, address, telephone number and title of the person(s) in the organization requesting an exemption from whom further information on the application may be obtained; and

(vi) The name, address, telephone number and title of the person(s) in the organization requesting an exemption who is responsible for recording and making available the information specified in this paragraph (c), and the location where such information will be maintained.

(d) *Additional requirements.* (1) The product transfer documents associated with R&D motor vehicle diesel fuel must comply with requirements of § 80.590(b)(5).

(2) The R&D diesel fuel must be designated by the refiner or supplier, as applicable, as R&D diesel fuel.

(3) The R&D diesel fuel must be kept segregated from non-exempt motor vehicle diesel fuel at all points in the distribution system.

(4) The R&D diesel fuel must not be sold, distributed, offered for sale or distribution, dispensed, supplied, offered for supply, transported to or from, or stored by a diesel fuel retail outlet, or by a wholesale purchaser-consumer facility, unless the wholesale purchaser-consumer facility is associated with the R&D program that uses the diesel fuel.

(5) At the completion of the program, any emission control systems or elements of design which are damaged or rendered inoperative shall be replaced on vehicles remaining in service, or the responsible person will be liable for a violation of the Clean Air Act Section 203(a)(3) unless sufficient evidence is supplied that the emission controls or elements of design were not damaged.

(e) *Mechanism for granting of an exemption.* A request for an R&D exemption will be deemed approved by the earlier of sixty (60) days from the date on which EPA receives the request for exemption, (provided that EPA has not notified the applicant of potential disapproval by that time), or the date on which the applicant receives a written approval letter from EPA.

(1) The volume of diesel fuel subject to the approval shall not exceed the estimated amount in paragraph (c)(3)(iv) of this section, unless EPA grants a greater amount in writing.

(2) Any exemption granted under this section will expire at the completion of the test program or three years from the date of approval, whichever occurs first, and may only be extended upon re-application consistent will all requirements of this section.

(3) The passage of sixty (60) days will not signify the acceptance by EPA of the validity of the information in the request for an exemption. EPA may elect at any time to review the information contained in the request, and where appropriate may notify the responsible person of disapproval of the exemption.

(4) In granting an exemption the Administrator may include terms and conditions, including replacement of emission control devices or elements of design, that the Administrator determines are necessary for monitoring the exemption and for assuring that the purposes of this subpart are met.

(5) Any violation of a term or condition of the exemption, or of any requirement of this section, will cause the exemption to be void ab initio.

(6) If any information required under paragraph (c) of this section should change after approval of the exemption, the responsible person must notify EPA in writing immediately. Failure to do so may result in disapproval of the exemption or may make it void ab initio, and may make the party liable for a violation of this subpart.

(f) *Effects of exemption.* Motor vehicle diesel fuel that is subject to an R&D exemption under this section is exempt from other provisions of this subpart provided that the fuel is used in a manner that complies with the purpose of the program under paragraph (c) of

EXHIBIT J

this section and the requirements of this section.

(g) *Notification of Completion.* The party shall notify EPA in writing within thirty (30) days of completion of the R&D program.

§ 80.601 What requirements apply to motor vehicle diesel fuel for use in the Territories?

The sulfur standards of § 80.520(a)(1) and (c) do not apply to diesel fuel that is produced, imported, sold, offered for sale, supplied, offered for supply, stored, dispensed, or transported for use in the Territories of Guam, American Samoa or the Commonwealth of the Northern Mariana Islands provided that such diesel fuel is:

(a) Designated by the refiner or importer as high sulfur diesel fuel only for use in Guam, American Samoa, or the Commonwealth of the Northern Mariana Islands;

(b) Used only in Guam, American Samoa, or the Commonwealth of the Northern Mariana Islands;

(c) Accompanied by documentation that complies with the product transfer document requirements of § 80.590(e)(3); and

(d) Segregated from non-exempt motor vehicle diesel fuel at all points in the distribution system from the point the diesel fuel is designated as exempt fuel only for use in Guam, American Samoa, or the Commonwealth of the Northern Mariana Islands, while the exempt fuel is in the United States but outside these Territories.

§ 80.602 What exemption applies to diesel fuel used in vehicles having a national security exemption from motor vehicle emissions standards?

The motor vehicle diesel fuel standards of § 80.520(a)(1), (a)(2), and (c) do not apply to diesel fuel that is produced, imported, sold, offered for sale, supplied, offered for supply, stored, dispensed, or transported for use in:

(a) Vehicles for which EPA has granted a national security exemption under 40 CFR 85.1708 from motor vehicle emissions standards under 40 CFR Part 86; or

(b) Tactical military motor vehicles that are not subject to a national security exemption from motor vehicle emissions standards but for national security purposes (for purposes of readiness for deployment oversees) need to be fueled on the same fuel as motor vehicles for which EPA has granted a national security exemption, provided that such fuel is:

(1) Used only in vehicles identified in paragraph (a) of this section or this paragraph (b);

(2) Accompanied by product transfer documents as required under § 80.590;

(3) Segregated from non-exempt motor vehicle diesel fuel at all points in the distribution system; and

(4) Dispensed from a fuel pump stand, fueling truck or tank that is labeled under the provisions of § 80.570(c). Any such fuel pump stand, fueling truck or tank may also be labeled with the appropriate designation of the fuel, such as ''JP–8''.

§ 80.603–80.609 [Reserved]

Violation Provisions

§ 80.610 What acts are prohibited under the diesel fuel sulfur program?

No person shall:

(a) *Standard or dye violation.* Produce, import, sell, offer for sale, dispense, supply, offer for supply, store or transport motor vehicle diesel fuel that does not comply with the applicable standards and dye requirements under § 80.520.

(b) *Additive violation.* (1) Produce, import, sell, offer for sale, dispense, supply, offer for supply, store or transport any motor vehicle diesel fuel additive for use at a downstream location that does not comply with the requirements under § 80.521(a) or (b), as applicable.

(2) Blend or permit the blending into motor vehicle diesel fuel at a downstream location, or use, or permit the use, as motor vehicle diesel fuel, of any additive which does not comply with the requirements of § 80.521(a) or (b), as applicable.

(c) *Used motor oil violation.* Introduce into the fuel system of model year 2007 or later diesel motor vehicles, or permit the introduction into the fuel system of such vehicles of used motor oil, or used motor oil blended with diesel fuel, which does not comply with the requirements of § 80.522.

(d) *Improper fuel usage violation.* (1) Introduce, or permit the introduction of, diesel fuel into model year 2007 or later diesel motor vehicles, and beginning December 1, 2010 into any diesel motor vehicle, which does not comply with the standards and dye requirements of § 80.520(a) and (b).

(2) Produce, import, sell, offer for sale, dispense, offer for supply, store, or transport for use in model year 2007 or later diesel motor vehicles, or introduce or permit the introduction into such motor vehicles, motor vehicle diesel fuel that is identified as other than diesel fuel complying with the 15 ppm sulfur standard; and beginning December 1, 2010, diesel fuel for use in or introduced into any diesel motor vehicle.

(e) *Cause another party to violate.* Cause another person to commit an act in violation of paragraphs (a) through (d) of this section.

(f) *Cause violating fuel or additive to be in the distribution system.* Cause motor vehicle diesel fuel to be in the motor vehicle diesel fuel distribution system which does not comply with the applicable standard and dye requirements of § 80.520(a) and (b), or cause any motor vehicle diesel fuel additive to be in the motor vehicle diesel fuel additive distribution system which does not comply with the applicable sulfur, cetane, and/or aromatics standards of § 80.521.

§ 80.611 What evidence may be used to determine compliance with the prohibitions and requirements of this subpart and liability for violations of this subpart?

(a) *Compliance with sulfur, cetane, and aromatics standards.* Compliance with the standards in §§ 80.520, 80.521, and 80.522 shall be determined based on the level of the applicable component or parameter, using the sampling methodologies specified in § 80.330(b), as applicable, and the appropriate testing methodologies specified in § 80.580(a)(2) for sulfur, or one of the alternative methodologies for sulfur as approved under § 80.580(a)(3); § 80.2(w) for cetane index; and § 80.2(z) for aromatic content. Any evidence or information, including the exclusive use of such evidence or information, may be used to establish the level of the applicable component or parameter in the diesel fuel or additive, or motor oil to be used in diesel fuel, if the evidence or information is relevant to whether that level would have been in compliance with the standard if the regulatory sampling and testing methodology had been correctly performed. Such evidence may be obtained from any source or location and may include, but is not limited to, test results using methods other than the compliance methods in this paragraph (a), business records, and commercial documents.

(b) *Compliance with other requirements.* Determination of compliance with the requirements of this subpart other than the standards described in paragraph (a) of this section and in §§ 80.520, 80.521, and 80.522, and determination of liability for any violation of this subpart, may be based on information obtained from any source or location. Such information may include, but is not limited to, business records and commercial documents.

EXHIBIT J

§ 80.612 Who is liable for violations of this subpart?

(a) *Persons liable for violations of prohibited acts.*—(1) *Standard, dye, additives, motor oil, and introduction violations.* (i) Any refiner, importer, distributor, reseller, carrier, retailer, or wholesale purchaser-consumer who owned, leased, operated, controlled or supervised a facility where a violation of § 80.610(a) through (d) occurred, or any other person who violates § 80.610(a) through (d), is deemed liable for the applicable violation.

(ii) Any person who causes another person to violate § 80.610(a) through (d) is liable for a violation of § 80.610(e).

(iii) Any refiner, importer, distributor, reseller, carrier, retailer, or wholesale purchaser-consumer who produced, imported, sold, offered for sale, dispensed, supplied, offered to supply, stored, transported, or caused the transportation or storage of, motor vehicle diesel fuel that violates § 80.610(a), is deemed in violation of § 80.610(e).

(iv) Any person who produced, imported, sold, offered for sale, dispensed, supplied, offered to supply, stored, transported, or caused the transportation or storage of a motor vehicle diesel fuel additive which is used in motor vehicle diesel fuel that is found to violate § 80.610(a), is deemed in violation of § 80.610(e).

(2) *Cause violating motor vehicle diesel fuel or additive to be in the distribution system.* Any refiner, importer, distributor, reseller, carrier, retailer, or wholesale purchaser-consumer or any other person who owned, leased, operated, controlled or supervised a facility from which motor vehicle diesel fuel or additive was released into the motor vehicle diesel fuel or additive distribution system which does not comply with the applicable standards or dye requirements of § 80.520 or § 80.521, is deemed in violation of § 80.610(f).

(3) *Branded refiner/importer liability.* Any refiner or importer whose corporate, trade, or brand name, or whose marketing subsidiary's corporate, trade, or brand name appeared at a facility where a violation of § 80.610(a) occurred, is deemed in violation of § 80.610(a).

(4) *Carrier causation.* In order for a motor vehicle diesel fuel or motor vehicle diesel fuel additive carrier to be liable under paragraph (a)(1)(ii), (iii) or (iv) of this section, as applicable, EPA must demonstrate, by reasonably specific showing by direct or circumstantial evidence, that the carrier caused the violation.

(5) *Parent corporation.* Any parent corporation is liable for any violations of this subpart that are committed by any subsidiary.

(6) *Joint venture.* Each partner to a joint venture is jointly and severally liable for any violation of this subpart that occurs at the joint venture facility or is committed by the joint venture operation.

(b) *Persons liable for failure to comply with other provisions ofthis subpart.* Any person who:

(1) Fails to comply with the requirements of a provision of this subpart not addressed in paragraph (a) of this section is liable for a violation of that provision; or

(2) Causes another person to fail to comply with the requirements of a provision of this subpart not addressed in paragraph (a) of this section, is liable for causing a violation of that provision.

§ 80.613 What defenses apply to persons deemed liable for a violation of a prohibited act?

(a) *Presumptive liability defenses.* (1) Any person deemed liable for a violation of a prohibition under § 80.612(a)(1)(i) or (iii), (a)(2), or (a)(3), will not be deemed in violation if the person demonstrates:

(i) The violation was not caused by the person or the person's employee or agent;

(ii) Product transfer documents account for fuel or additive found to be in violation and indicate that the violating product was in compliance with the applicable requirements when it was under the party's control;

(iii) The person conducted a quality assurance sampling and testing program, as described in paragraph (d) of this section, except for those parties subject to the provisions of paragraph (a)(1)(iv) or (v) of this section. A carrier may rely on the quality assurance program carried out by another party, including the party who owns the diesel fuel in question, provided that the quality assurance program is carried out properly. Retailers, wholesale purchaser-consumers, and ultimate consumers of diesel fuel are not required to conduct quality assurance programs;

(iv) For refiners and importers of motor vehicle diesel fuel subject to the 15 ppm standard under § 80.520(a)(1), test results which:

(A) Were conducted according to the test methodology required under § 80.580 (a)(2) or an approved alternative test method under § 80.580(a)(3); and

(B) Establish that, when it left the party's control, the sulfur content of motor vehicle diesel fuel subject to the 15 ppm standard did not exceed 15 ppm; and

(v) For any person who, at a downstream location, blends a diesel fuel additive subject to the requirements of § 80.521(b) into motor vehicle diesel fuel subject to the sulfur standard under § 80.520(a)(1), except a blender who blends additives into fuel trucks at a truck loading rack subject to the provisions of (d)(1) of this section, test results which are conducted subsequent to the blending of the additive into the fuel, and which comply with the requirements of paragraphs (a)(4)(iv)(A) and (B) of this section.

(2) Any party deemed liable for a violation under § 80.612(a)(1)(iv), in regard to a diesel fuel additive subject to the requirements of § 80.521(a), will not be deemed in violation if the person demonstrates that:

(i) Product transfer document(s) account for the additive in the fuel found to be in violation, which comply with the requirements under § 80.591(a), and indicate that the additive was in compliance with the applicable requirements while it was under the party's control; and

(ii) For the additive's manufacturer or importer, test results which accurately establish that, when it left the party's control, the additive in the diesel fuel determined to be in violation did not have a sulfur content in excess of 15 ppm.

(A) Analysis of the additive sulfur content pursuant to this paragraph (a)(2) may be conducted at the time the batch was manufactured or imported, or on a sample of that batch which the manufacturer or importer retains for such purpose for a minimum of two years from the date the batch was manufactured or imported.

(B) After two years from the date the additive batch was manufactured or imported, the additive manufacturer or importer is no longer required to retain samples for the purpose of complying with the testing requirements of this paragraph (a)(2) of this section.

(C) The analysis of the sulfur content of the additive must be conducted pursuant to the requirements of § 80.580(a).

(3) Any person who is deemed liable for a violation under § 80.612 (a)(1)(iv) with regard to a diesel fuel additive subject to the requirements of § 80.521(b), will not be deemed in violation if the person demonstrates that:

(i) The violation was not caused by the party or the party's employee or agent;

EXHIBIT J

(ii) Product transfer document(s) which comply with the additive information requirements under § 80.591 (b), account for the additive in the fuel found to be in violation, and indicate that the additive was in compliance with the applicable requirements while it was under the party's control; and

(iii) For the additive's manufacturer or importer, test results which accurately establish that, when it left the party's control, the additive in the diesel fuel determined to be in violation was in conformity with the information on the additive product transfer document pursuant to the requirements of § 80.591(b). The testing procedures applicable under paragraph (a)(2) of this section, also apply under this paragraph (a)(3).

(b) *Branded refiner defenses.* In the case of a violation found at a facility operating under the corporate, trade or brand name of a refiner or importer, or a refiner's or importer's marketing subsidiary, the refiner or importer must show, in addition to the defense elements required under paragraph (a)(1) of this section, that the violation was caused by:

(1) An act in violation of law (other than the Clean Air Act or this Part 80), or an act of sabotage or vandalism;

(2) The action of any refiner, importer, retailer, distributor, reseller, oxygenate blender, carrier, retailer or wholesale purchaser-consumer in violation of a contractual agreement between the branded refiner or importer and the person designed to prevent such action, and despite periodic sampling and testing by the branded refiner or importer to ensure compliance with such contractual obligation; or

(3) The action of any carrier or other distributor not subject to a contract with the refiner or importer, but engaged for transportation of diesel fuel, despite specifications or inspections of procedures and equipment which are reasonably calculated to prevent such action.

(c) *Causation demonstration.* Under paragraph (a)(1) of this section for any person to show that a violation was not caused by that person, or under paragraph (b) of this section to show that a violation was caused by any of the specified actions, the person must demonstrate by reasonably specific showing, by direct or circumstantial evidence, that the violation was caused or must have been caused by another person and that the person asserting the defense did not contribute to that other person's causation.

(d) *Quality assurance and testing program.* To demonstrate an acceptable quality assurance program under paragraph (a)(1)(iii) of this section, a person must present evidence of the following:

(1) A periodic sampling and testing program to ensure the motor vehicle diesel fuel or additive the person sold, dispensed, supplied, stored, or transported, meets the applicable standards.

(2) For those parties who, at a downstream location, blend diesel fuel additives subject to the requirements of § 80.521(b) into fuel trucks at a truck loading rack, the periodic sampling and testing program required under this paragraph (d) must ensure, by taking into account the greater risk of noncompliance created through use of a high sulfur additive, that the diesel fuel into which the additive was blended meets the applicable standards subsequent to the blending.

(3) On each occasion when motor vehicle diesel fuel or additive is found not in compliance with the applicable standard:

(i) The person immediately ceases selling, offering for sale, dispensing, supplying, offering for supply, storing or transporting the non-complying product; and

(ii) The person promptly remedies the violation and the factors that caused the violation (for example, by removing the non-complying product from the distribution system until the applicable standard is achieved and taking steps to prevent future violations of a similar nature from occurring).

(4) For any carrier who transports motor vehicle diesel fuel or additive in a tank truck, the quality assurance program required under this paragraph (d) need not include its own periodic sampling and testing of the motor vehicle diesel fuel or additive in the tank truck, but in lieu of such tank truck sampling and testing, the carrier shall demonstrate evidence of an oversight program for monitoring compliance with the requirements of this subpart relating to the transport or storage of such product by tank truck, such as appropriate guidance to drivers regarding compliance with the applicable sulfur standard and product transfer document requirements, and the periodic review of records received in the ordinary course of business concerning motor vehicle diesel fuel or additive quality and delivery.

§ 80.614 What penalties apply under this subpart?

(a) Any person liable for a violation under § 80.612 is subject to civil penalties as specified in section 205 of the Clean Air Act for every day of each such violation and the amount of economic benefit or savings resulting from each violation.

(b)(1) Any person liable under § 80.612(a)(1) for a violation of an applicable standard or requirement under § 80.520, or of causing another party to violate such standard or requirement, is subject to a separate day of violation for each and every day the non-complying motor vehicle diesel fuel remains any place in the distribution system.

(2) Any person liable under § 80.612(a)(2) for causing motor vehicle diesel fuel to be in the distribution system which does not comply with an applicable standard or requirement of § 80.520, is subject to a separate day of violation for each and every day that the non-complying motor vehicle diesel fuel remains any place in the motor vehicle diesel fuel distribution system.

(3) Any person liable under § 80.612(a)(1) for blending into motor vehicle diesel fuel an additive violating the applicable sulfur standard pursuant to the requirements of § 80.521(a) or (b), as appropriate, or of causing another party to so blend or add such an additive, is subject to a separate day of violation for each and every day the motor vehicle diesel fuel into which the noncomplying additive was blended, remains any place in the fuel distribution system.

(4) For purposes of this paragraph (b), the length of time the motor vehicle diesel fuel in question remained in the motor vehicle diesel fuel distribution system is deemed to be twenty-five days, unless a person subject to liability or EPA demonstrates by reasonably specific showings, by direct or circumstantial evidence, that the non-complying motor vehicle diesel fuel remained in the distribution system for fewer than or more than twenty-five days.

(c) Any person liable under § 80.612(b) for failure to meet, or causing a failure to meet, a provision of this subpart is liable for a separate day of violation for each and every day such provision remains unfulfilled.

§§ 80.615–80.619 [Reserved]

Provisions for Foreign Refiners and Importers for Motor Vehicle Diesel Fuel Subject to a Temporary Compliance Option or Hardship Provision

§ 80.620 What are the additional requirements for motor vehicle diesel fuel produced by foreign refineries subject to a temporary refiner compliance option or hardship provisions?

(a) *Definitions.* (1) A foreign refinery is a refinery that is located outside the

EXHIBIT J

United States, the Commonwealth of Puerto Rico, the Virgin Islands, Guam, American Samoa, and the Commonwealth of the Northern Mariana Islands (collectively referred to in this section as ''the United States'').

(2) A foreign refiner is a person who meets the definition of refiner under § 80.2(i) for a foreign refinery.

(3) A diesel fuel program foreign refiner (''DFR'') is a foreign refiner that has been approved by EPA for participation in any motor vehicle diesel fuel credits program, motor vehicle diesel fuel temporary compliance option, hardship or GPA provisions of §§ 80.530 through 80.532, § 80.540, § 80.552, § 80.553, § 80.560 or § 80.561 (collectively referred to as ''diesel foreign refiner program'').

(4) ''DFR-Diesel'' means motor vehicle diesel fuel produced at a DFR refinery that is imported into the United States.

(5) ''Non-DFR-Diesel'' means motor vehicle diesel fuel that is produced at a foreign refinery that has not been approved as a DFR foreign refiner, motor vehicle diesel fuel produced at a DFR foreign refinery that is not imported into the United States, and motor vehicle diesel fuel produced at a DFR foreign refinery during a period when the foreign refiner has opted to not participate in the DFR-Diesel diesel foreign refiner program under paragraph (c)(3) of this section.

(6) ''Certified DFR-Diesel'' means DFR-Diesel the foreign refiner intends to include in the foreign refinery's compliance calculations under §§ 80.530 through 80.532, § 80.540, § 80.552, § 80.553, § 80.560 or § 80.561 and does include in these compliance calculations when reported to EPA.

(7) ''Non-Certified DFR-Diesel'' means DFR-Diesel fuel that a DFR foreign refiner imports to the United States that is not Certified DFR-Diesel.

(b) *Baseline.* For any foreign refiner to obtain approval under the diesel foreign refiner program of this subpart for any refinery, it must apply for approval under the applicable provisions of this subpart. To obtain approval the refiner is required, as applicable, to demonstrate a volume baseline for calendar years 1998 and 1999 for motor vehicle diesel fuel produced for use in the United States under §§ 80.595 and 80.596.

(1) The refiner shall follow the procedures, applicable to volume baselines and using motor vehicle diesel fuel instead of gasoline, in §§ 80.91 through 80.93 to establish the volume of motor vehicle diesel fuel that was produced at the refinery and imported into the United States during 1998 and 1999 for purposes of establishing a baseline under §§ 80.595 and 80.596.

(2) In making determinations for foreign refinery baselines EPA will consider all information supplied by a foreign refiner, and in addition may rely on any and all appropriate assumptions necessary to make such determinations.

(3) Where a foreign refiner submits a petition that is incomplete or inadequate to establish an accurate baseline, and the refiner fails to correct this deficiency after a request for more information, EPA will not assign an individual refinery motor vehicle diesel fuel volume baseline.

(c) *General requirements for DFR foreign refiners.* A foreign refiner of a refinery that is approved under the diesel foreign refiner program of this subpart must designate each batch of motor vehicle diesel fuel produced at the foreign refinery that is exported to the United States as either Certified DFR-Diesel or as Non-Certified DFR-Diesel, except as provided in paragraph (c)(3) of this section. It must further designate all Certified DFR-Diesel as complying with either the 15 ppm sulfur standard under § 80.520(a)(1) or the 500 ppm sulfur standard under § 80.520(c).

(1) In the case of Certified DFR-Diesel, the foreign refiner must meet all requirements that apply to refiners under this subpart, except that:

(i) For purposes of complying with the compliance option requirements of § 80.530, motor vehicle diesel fuel produced by a foreign refinery must comply separately for each Credit Trading Area of import, as defined in § 80.531(a)(5).

(ii) For purposes of complying with the compliance option requirements of § 80.530, credits obtained from any other refinery or from any importer must have been generated in the same Credit Trading Area as the Credit Trading Area of import of the fuel for which credits are needed to achieve compliance.

(iii) For purposes of generating credits under this subpart, credits shall be generated separately by Credit Trading Area of import and shall be designated by Credit Trading Area of importation and by port of importation.

(2) In the case of Non-Certified DFR-Diesel, the foreign refiner shall meet all the following requirements:

(i) The designation requirements in this section.

(ii) The reporting requirements in this section and § 80.593.

(iii) The product transfer document requirements in this section.

(iv) The prohibitions in this section and § 80.610.

(3)(i) Any foreign refiner that has been approved to produce motor vehicle diesel fuel subject to the diesel foreign refiner program for a foreign refinery under this subpart may elect to classify no diesel fuel imported into the United States as DFR-Diesel provided the foreign refiner notifies EPA of the election no later than November 1 of the prior calendar year.

(ii) An election under paragraph (c)(3)(i) of this section shall be for an entire calendar year and apply to all motor vehicle diesel fuel that is produced by the foreign refinery that is imported into the United States, and shall remain in effect for each succeeding year unless and until the foreign refiner notifies EPA of the termination of the election. The change in election shall take effect at the beginning of the next calendar year.

(d) *Designation, product transfer documents, and foreign refiner certification.* (1) Any foreign refiner of a foreign refinery that has been approved by EPA to produce motor vehicle diesel fuel subject to the diesel foreign refiner program must designate each batch of DFR-Diesel as such at the time the diesel fuel is produced, unless the refiner has elected to classify no diesel fuel exported to the United States as DFR-Diesel under paragraph (c)(3) of this section.

(2) On each occasion when any person transfers custody or title to any DFR-Diesel prior to its being imported into the United States, it must include the following information as part of the product transfer document information in this section:

(i) Identification of the diesel fuel as Certified DFR-Diesel or as Non-Certified DFR-Diesel, and if it is Certified DFR-Diesel, further designation as meeting the 500 ppm sulfur standard under § 80.520(c) or the 15 ppm sulfur standard under § 80.520(a)(1) pursuant to § 80.523; and

(ii) The name and EPA refinery registration number (under § 80.593) of the refinery where the DFR-Diesel was produced.

(3) On each occasion when DFR-Diesel is loaded onto a vessel or other transportation mode for transport to the United States, the foreign refiner shall prepare a certification for each batch of the DFR-Diesel that meets the following requirements.

(i) The certification shall include the report of the independent third party under paragraph (f) of this section, and the following additional information:

(A) The name and EPA registration number of the refinery that produced the DFR-Diesel;

EXHIBIT J

(B) The identification of the diesel fuel as Certified DFR-Diesel or Non-Certified DFR-Diesel;

(C) The volume of DFR-Diesel being transported, in gallons;

(D) In the case of Certified DFR-Diesel:

(*1*) The sulfur content as determined under paragraph (f) of this section, and the designation of the fuel as complying with the 15 ppm sulfur content standard for motor vehicle diesel fuel under § 80.520(a)(1) or the 500 ppm sulfur content standard for motor vehicle diesel fuel under § 80.520(c); and

(*2*) A declaration that the DFR-Diesel is being included in the applicable compliance calculations required by the EPA under this subpart.

(ii) The certification shall be made part of the product transfer documents for the DFR-Diesel.

(e) *Transfers of DFR-Diesel to non-United States markets.* The foreign refiner is responsible to ensure that all diesel fuel classified as DFR-Diesel is imported into the United States. A foreign refiner may remove the DFR-Diesel classification, and the diesel fuel need not be imported into the United States, but only if:

(1)(i) The foreign refiner excludes:

(A) The volume of diesel from the refinery's compliance report under § 80.593; and

(B) In the case of Certified DFR-Diesel, the volume of the diesel fuel from the compliance report under § 80.593.

(ii) The exclusions under paragraph (e)(1)(i) of this section shall be on the basis of the designations under § 80.523 and volumes determined under paragraph (f) of this section.

(2) The foreign refiner obtains sufficient evidence in the form of documentation that the diesel fuel was not imported into the United States.

(f) *Load port independent sampling, testing and refinery identification.* (1) On each occasion that DFR-Diesel is loaded onto a vessel for transport to the United States a foreign refiner shall have an independent third party:

(i) Inspect the vessel prior to loading and determine the volume of any tank bottoms;

(ii) Determine the volume of DFR-Diesel loaded onto the vessel (exclusive of any tank bottoms before loading);

(iii) Obtain the EPA-assigned registration number of the foreign refinery;

(iv) Determine the name and country of registration of the vessel used to transport the DFR-Diesel to the United States; and

(v) Determine the date and time the vessel departs the port serving the foreign refinery.

(2) On each occasion that Certified DFR-Diesel is loaded onto a vessel for transport to the United States a foreign refiner shall have an independent third party:

(i) Collect a representative sample of the Certified DFR-Diesel from each vessel compartment subsequent to loading on the vessel and prior to departure of the vessel from the port serving the foreign refinery;

(ii) Determine the sulfur content value for each compartment using the methodology specified in § 80.580 by:

(A) The third party analyzing each sample; or

(B) The third party observing the foreign refiner analyze the sample;

(iii) Review original documents that reflect movement and storage of the certified DFR-Diesel from the refinery to the load port, and from this review determine:

(A) The refinery at which the DFR-Diesel was produced; and

(B) That the DFR-Diesel remained segregated from:

(*1*) Non-DFR-Diesel and Non-Certified DFR-Diesel; and

(*2*) Other Certified DFR-Diesel produced at a different refinery.

(3) The independent third party shall submit a report:

(i) To the foreign refiner containing the information required under paragraphs (f)(1) and (f)(2) of this section, to accompany the product transfer documents for the vessel; and

(ii) To the Administrator containing the information required under paragraphs (f)(1) and (f)(2) of this section, within thirty days following the date of the independent third party's inspection. This report shall include a description of the method used to determine the identity of the refinery at which the diesel fuel was produced, assurance that the diesel fuel remained segregated as specified in paragraph (n)(1) of this section, and a description of the diesel fuel's movement and storage between production at the source refinery and vessel loading.

(4) The independent third party must:

(i) Be approved in advance by EPA, based on a demonstration of ability to perform the procedures required in this paragraph (f);

(ii) Be independent under the criteria specified in § 80.65(e)(2)(iii); and

(iii) Sign a commitment that contains the provisions specified in paragraph (i) of this section with regard to activities, facilities and documents relevant to compliance with the requirements of this paragraph (f).

(g) *Comparison of load port and port of entry testing.* (1) Load port and port of entry testing requirements, as follows:

(i) Any foreign refiner and any United States importer of Certified DFR-Diesel shall compare the results from the load port testing under paragraph (f) of this section, with the port of entry testing as reported under paragraph (o) of this section, for the volume of diesel and the sulfur value; except that

(ii) Where a vessel transporting Certified DFR-Diesel off loads this diesel fuel at more than one United States port of entry, and the conditions of paragraph (g)(2)(i) of this section are met at the first United States port of entry, the requirements of paragraph (g)(2) of this section do not apply at subsequent ports of entry if the United States importer obtains a certification from the vessel owner that meets the requirements of paragraph(s) of this section, that the vessel has not loaded any diesel fuel or blendstock between the first United States port of entry and the subsequent port of entry.

(2)(i) The requirements of this paragraph (g)(2) apply if:

(A) The temperature-corrected volumes determined at the port of entry and at the load port differ by more than one percent; or

(B) The sulfur value determined at the port of entry is higher than the sulfur value determined at the load port, and the amount of this difference is greater than the reproducibility amount specified for the port of entry test result by the American Society of Testing and Materials (ASTM).

(ii) The United States importer and the foreign refiner shall treat the diesel fuel as Non-Certified DFR-Diesel, and the foreign refiner shall exclude the diesel fuel volume from its motor vehicle diesel fuel volumes calculations and sulfur standard designations under § 80.523.

(h) *Attest requirements.* Refiners, for each calendar year, must arrange to have an attest engagement performed of the underlying documentation that forms the basis of any report required under this subpart. The attest engagement must comply with the procedures and requirements that apply to refiners under §§ 80.125 through 80.130 and must be submitted to the Administrator of EPA by May 30 of each year for the prior calendar year. The following additional procedures shall be carried out for any foreign refiner of DFR-Diesel:

(1) The inventory reconciliation analysis under § 80.128(b) and the tender analysis under § 80.128(c) shall include Non-DFR-Diesel.

(2) Obtain separate listings of all tenders of Certified DFR-Diesel and of Non-Certified DFR-Diesel, and obtain separate listings of Certified DFR-Diesel

EXHIBIT J

based on whether it is 15 ppm sulfur content motor vehicle diesel fuel or 500 ppm sulfur content motor vehicle diesel fuel. Agree the total volume of tenders from the listings to the diesel fuel inventory reconciliation analysis in § 80.128(b), and to the volumes determined by the third party under paragraph (f)(1) of this section.

(3) For each tender under paragraph (h)(2) of this section, where the diesel fuel is loaded onto a marine vessel, report as a finding the name and country of registration of each vessel, and the volumes of DFR-Diesel loaded onto each vessel.

(4) Select a sample from the list of vessels identified in paragraph (h)(3) of this section used to transport Certified DFR-Diesel, in accordance with the guidelines in § 80.127, and for each vessel selected perform the following:

(i) Obtain the report of the independent third party, under paragraph (f) of this section, and of the United States importer under paragraph (o) of this section.

(A) Agree the information in these reports with regard to vessel identification, diesel fuel volumes and sulfur content test results.

(B) Identify, and report as a finding, each occasion the load port and port of entry sulfur content and volume results differ by more than the amounts allowed in paragraph (g) of this section, and determine whether the foreign refiner adjusted its refinery calculations as required in paragraph (g) of this section.

(ii) Obtain the documents used by the independent third party to determine transportation and storage of the Certified DFR-Diesel from the refinery to the load port, under paragraph (f) of this section. Obtain tank activity records for any storage tank where the Certified DFR-Diesel is stored, and pipeline activity records for any pipeline used to transport the Certified DFR-Diesel, prior to being loaded onto the vessel. Use these records to determine whether the Certified DFR-Diesel was produced at the refinery that is the subject of the attest engagement, and whether the Certified DFR-Diesel was mixed with any Non-Certified DFR-Diesel, Non-DFR-Diesel, or any Certified DFR-Diesel produced at a different refinery.

(5) Select a sample from the list of vessels identified in paragraph (h)(3) of this section used to transport certified and Non-Certified DFR-Diesel, in accordance with the guidelines in § 80.127, and for each vessel selected perform the following:

(i) Obtain a commercial document of general circulation that lists vessel arrivals and departures, and that includes the port and date of departure of the vessel, and the port of entry and date of arrival of the vessel.

(ii) Agree the vessel's departure and arrival locations and dates from the independent third party and United States importer reports to the information contained in the commercial document.

(6) Obtain separate listings of all tenders of Non-DFR-Diesel, and perform the following:

(i) Agree the total volume and sulfur content of tenders from the listings to the diesel fuel inventory reconciliation analysis in § 80.128(b).

(ii) Obtain a separate listing of the tenders under this paragraph (h)(6) where the diesel fuel is loaded onto a marine vessel. Select a sample from this listing in accordance with the guidelines in § 80.127, and obtain a commercial document of general circulation that lists vessel arrivals and departures, and that includes the port and date of departure and the ports and dates where the diesel fuel was off loaded for the selected vessels. Determine and report as a finding the country where the diesel fuel was off loaded for each vessel selected.

(7) In order to complete the requirements of this paragraph (h) an auditor shall:

(i) Be independent of the foreign refiner;

(ii) Be licensed as a Certified Public Accountant in the United States and a citizen of the United States, or be approved in advance by EPA based on a demonstration of ability to perform the procedures required in §§ 80.125 through 80.130 and this paragraph (h); and

(iii) Sign a commitment that contains the provisions specified in paragraph (i) of this section with regard to activities and documents relevant to compliance with the requirements of §§ 80.125 through 80.130 and this paragraph (h).

(i) *Foreign refiner commitments.* Any foreign refiner shall commit to and comply with the provisions contained in this paragraph (i) as a condition to being approved for a temporary refiner diesel fuel program option.

(1) Any United States Environmental Protection Agency inspector or auditor must be given full, complete and immediate access to conduct inspections and audits of the foreign refinery.

(i) Inspections and audits may be either announced in advance by EPA, or unannounced.

(ii) Access will be provided to any location where:

(A) Diesel fuel is produced;

(B) Documents related to refinery operations are kept;

(C) Diesel fuel or blendstock samples are tested or stored; and

(D) DFR-Diesel is stored or transported between the foreign refinery and the United States, including storage tanks, vessels and pipelines.

(iii) Inspections and audits may be by EPA employees or contractors to EPA.

(iv) Any documents requested that are related to matters covered by inspections and audits must be provided to an EPA inspector or auditor on request.

(v) Inspections and audits by EPA may include review and copying of any documents related to:

(A) Refinery baseline establishment, if applicable, including the volume and sulfur content; transfers of title or custody of any diesel fuel or blendstocks whether DFR-Diesel or Non-DFR-Diesel, produced at the foreign refinery during the period January 1, 1998 through the date of the refinery baseline petition or through the date of the inspection or audit if a baseline petition has not been approved, and any work papers related to refinery baseline establishment;

(B) The volume and sulfur content of DFR-Diesel;

(C) The proper classification of diesel fuel as being DFR-Diesel or as not being DFR-Diesel, or as Certified DFR-Diesel or as Non-Certified DFR-Diesel, or as meeting the 15 ppm sulfur standard under § 80.520(a)(1) or the 500 ppm sulfur standard under § 80.520(c);

(D) Transfers of title or custody to DFR-Diesel;

(E) Sampling and testing of DFR-Diesel;

(F) Work performed and reports prepared by independent third parties and by independent auditors under the requirements of this section, including work papers; and

(G) Reports prepared for submission to EPA, and any work papers related to such reports.

(vi) Inspections and audits by EPA may include taking samples of diesel fuel, diesel fuel additives or blendstock, and interviewing employees.

(vii) Any employee of the foreign refiner must be made available for interview by the EPA inspector or auditor, on request, within a reasonable time period.

(viii) English language translations of any documents must be provided to an EPA inspector or auditor, on request, within 10 working days.

(ix) English language interpreters must be provided to accompany EPA inspectors and auditors, on request.

(2) An agent for service of process located in the District of Columbia shall

EXHIBIT J

be named, and service on this agent constitutes service on the foreign refiner or any employee of the foreign refiner for any action by EPA or otherwise by the United States related to the requirements of this subpart.

(3) The forum for any civil or criminal enforcement action related to the provisions of this section for violations of the Clean Air Act or regulations promulgated thereunder shall be governed by the Clean Air Act, including the EPA administrative forum where allowed under the Clean Air Act.

(4) United States substantive and procedural laws shall apply to any civil or criminal enforcement action against the foreign refiner or any employee of the foreign refiner related to the provisions of this section.

(5) Submitting a petition for participation in the diesel foreign refiner program or producing and exporting diesel fuel under any such program, and all other actions to comply with the requirements of this subpart relating to participation in any diesel foreign refiner program, or to establish an individual refinery motor vehicle diesel fuel volume baseline (if applicable) constitute actions or activities that satisfy the provisions of 28 U.S.C. section 1605(a)(2), but solely with respect to actions instituted against the foreign refiner, its agents and employees in any court or other tribunal in the United States for conduct that violates the requirements applicable to the foreign refiner under this subpart, including conduct that violates Title 18 U.S.C. section 1001 and Clean Air Act section 113(c)(2).

(6) The foreign refiner, or its agents or employees, will not seek to detain or to impose civil or criminal remedies against EPA inspectors or auditors, whether EPA employees or EPA contractors, for actions performed within the scope of EPA employment related to the provisions of this section.

(7) The commitment required by this paragraph (i) shall be signed by the owner or president of the foreign refiner business.

(8) In any case where DFR-Diesel produced at a foreign refinery is stored or transported by another company between the refinery and the vessel that transports the DFR-Diesel to the United States, the foreign refiner shall obtain from each such other company a commitment that meets the requirements specified in paragraphs (i)(1) through (7) of this section, and these commitments shall be included in the foreign refiner's petition to participate in any diesel foreign refiner program .

(j) *Sovereign immunity.* By submitting a petition for participation in any diesel foreign refiner program under this subpart (and baseline, if applicable) under this section, or by producing and exporting diesel fuel to the United States under any such program, the foreign refiner, and its agents and employees, without exception, become subject to the full operation of the administrative and judicial enforcement powers and provisions of the United States without limitation based on sovereign immunity, with respect to actions instituted against the foreign refiner, its agents and employees in any court or other tribunal in the United States for conduct that violates the requirements applicable to the foreign refiner under this subpart including conduct that violates Title 18 U.S.C. section 1001 and Clean Air Act section 113(c)(2).

(k) *Bond posting.* Any foreign refiner shall meet the requirements of this paragraph (k) as a condition to approval for any diesel foreign refiner program under this subpart.

(1) The foreign refiner shall post a bond of the amount calculated using the following equation: Bond = G × $0.01

Where:
Bond = amount of the bond in U.S. dollars.
G = the volume baseline for motor vehicle diesel fuel produced at the foreign refinery and exported to the United States, in gallons.

(2) Bonds shall be posted by:

(i) Paying the amount of the bond to the Treasurer of the United States;

(ii) Obtaining a bond in the proper amount from a third party surety agent that is payable to satisfy United States administrative or judicial judgments against the foreign refiner, provided EPA agrees in advance as to the third party and the nature of the surety agreement; or

(iii) An alternative commitment that results in assets of an appropriate liquidity and value being readily available to the United States, provided EPA agrees in advance as to the alternative commitment.

(3) Bonds posted under this paragraph (k) shall:

(i) Be used to satisfy any judicial judgment that results from an administrative or judicial enforcement action for conduct in violation of this subpart, including where such conduct violates Title 18 U.S.C. 1001 and Clean Air Act section 113(c)(2);

(ii) Be provided by a corporate surety that is listed in the United States Department of Treasury Circular 570 ''Companies Holding Certificates of Authority as Acceptable Sureties on Federal Bonds'' (available from the Department of Treasury website at *http://www.fms.treas.gov* or from the Government Printing Office, phone (202) 512–1800); and

(iii) Include a commitment that the bond will remain in effect for at least five (5) years following the end of latest annual reporting period that the foreign refiner produces motor vehicle diesel fuel pursuant to the requirements of this subpart.

(4) On any occasion a foreign refiner bond is used to satisfy any judgment, the foreign refiner shall increase the bond to cover the amount used within 90 days of the date the bond is used.

(5) If the bond amount for a foreign refiner increases, the foreign refiner shall increase the bond to cover the shortfall within 90 days of the date the bond amount changes. If the bond amount decreases, the foreign refiner may reduce the amount of the bond beginning 90 days after the date the bond amount changes.

(l) [Reserved]

(m) *English language reports.* Any report or other document submitted to EPA by a foreign refiner shall be in English language, or shall include an English language translation.

(n) *Prohibitions.* (1) No person may combine Certified DFR-Diesel with any Non-Certified DFR-Diesel or Non-DFR-Diesel, and no person may combine Certified DFR-Diesel with any Certified DFR-Diesel produced at a different refinery, until the importer has met all the requirements of paragraph (o) of this section, except as provided in paragraph (e) of this section.

(2) No foreign refiner or other person may cause another person to commit an action prohibited in paragraph (n)(1) of this section, or that otherwise violates the requirements of this section.

(o) *United States importer requirements.* Any United States importer shall meet the following requirements:

(1) Each batch of imported motor vehicle diesel fuel shall be classified by the importer as being DFR-Diesel or as Non-DFR-Diesel, and each batch classified as DFR-Diesel shall be further classified as Certified DFR-Diesel or as Non-certified DFR-Diesel, and each batch of Certified DFR-Diesel shall be further classified as complying with the 500 ppm motor vehicle diesel fuel sulfur standard under § 80.520(c) or the 15 ppm motor vehicle diesel fuel sulfur standard under § 80.520(a)(1).

(2) Motor vehicle diesel fuel shall be classified as Certified DFR-Diesel or as Non-Certified DFR-Diesel according to the designation by the foreign refiner if this designation is supported by product

EXHIBIT J

transfer documents prepared by the foreign refiner as required in paragraph (d) of this section, unless the diesel fuel is classified as Non-Certified DFR-Diesel under paragraph (g) of this section. Additionally, the importer shall comply with all requirements of this subpart applicable to domestic refiners subject to any diesel foreign refiner program under this subpart.

(3) For each diesel fuel batch classified as DFR-Diesel, any United States importer shall perform the following procedures:

(i) In the case of both Certified and Non-Certified DFR-Diesel, have an independent third party:

(A) Determine the volume of diesel fuel in the vessel;

(B) Use the foreign refiner's DFR-Diesel certification to determine the name and EPA-assigned registration number of the foreign refinery that produced the DFR-Diesel;

(C) Determine the name and country of registration of the vessel used to transport the DFR-Diesel to the United States; and

(D) Determine the date and time the vessel arrives at the United States port of entry.

(ii) In the case of Certified DFR-Diesel, have an independent third party:

(A) Collect a representative sample from each vessel compartment subsequent to the vessel's arrival at the United States port of entry and prior to off loading any diesel fuel from the vessel;

(B) Obtain the compartment samples; and

(C) Determine the sulfur value of each compartment sample using the methodologies specified in § 80.580, by:

(*1*) The third party analyzing the sample; or

(*2*) The third party observing the importer analyze the sample.

(4) Any importer shall submit reports within thirty days following the date any vessel transporting DFR-Diesel arrives at the United States port of entry:

(i) To the Administrator containing the information determined under paragraph (o)(3) of this section; and

(ii) To the foreign refiner containing the information determined under paragraph (o)(3)(ii) of this section, and including identification of the port and Credit Trading Area at which the product was offloaded.

(5) Any United States importer shall meet the requirements specified in § 80.520, for any imported motor vehicle diesel fuel that is not classified as Certified DFR-Diesel under paragraph (o)(2) of this section.

(p) *Truck Imports of Certified DFR-Diesel produced at a Foreign Refinery.* (1) Any refiner whose Certified DFR-Diesel is transported into the United States by truck may petition EPA to use alternative procedures to meet the following requirements:

(i) Certification under paragraph (d)(5) of this section;

(ii) Load port and port of entry sampling and testing under paragraphs (f) and (g) of this section;

(iii) Attest under paragraph (h) of this section; and

(iv) Importer testing under paragraph (o)(3) of this section.

(2) These alternative procedures must ensure Certified DFR-Diesel remains segregated from Non-Certified DFR-Diesel and from Non-DFR-Diesel until it is imported into the United States. The petition will be evaluated based on whether it adequately addresses the following:

(i) Provisions for monitoring pipeline shipments, if applicable, from the refinery, that ensure segregation of Certified DFR-Diesel from that refinery from all other diesel fuel;

(ii) Contracts with any terminals and/or pipelines that receive and/or transport Certified DFR-Diesel, that prohibit the commingling of Certified DFR-Diesel with any of the following:

(A) Other Certified DFR-Diesel from other refineries.

(B) All Non-Certified DFR-Diesel.

(C) All Non-DFR-Diesel;

(iii) Procedures for obtaining and reviewing truck loading records and United States import documents for Certified DFR-Diesel to ensure that such diesel fuel is only loaded into trucks making deliveries to the United States;

(iv) Attest procedures to be conducted annually by an independent third party that review loading records and import documents based on volume reconciliation, or other criteria, to confirm that all Certified DFR-Diesel remains segregated throughout the distribution system and is only loaded into trucks for import into the United States.

(3) The petition required by this section must be submitted to EPA along with the application for temporary refiner relief individual refinery highway diesel sulfur standard under this subpart I and this section.

(q) *Withdrawal or suspension of a foreign refinery's temporary refinery flexibility program approval.* EPA may withdraw or suspend a diesel refiner temporary compliance option diesel fuel sulfur program approval for a foreign refinery where:

(1) A foreign refiner fails to meet any requirement of this section;

(2) A foreign government fails to allow EPA inspections as provided in paragraph (i)(1) of this section;

(3) A foreign refiner asserts a claim of, or a right to claim, sovereign immunity in an action to enforce the requirements in this subpart; or

(4) A foreign refiner fails to pay a civil or criminal penalty that is not satisfied using the foreign refiner bond specified in paragraph (k) of this section.

(r) *Early use of a foreign refiner baseline.* (1) A foreign refiner may begin using an individual refinery baseline before EPA has approved the baseline, provided that:

(i) A baseline petition has been submitted as required in paragraph (b) of this section;

(ii) EPA has made a provisional finding that the baseline petition is complete;

(iii) The foreign refiner has made the commitments required in paragraph (i) of this section;

(iv) The persons who will meet the independent third party and independent attest requirements for the foreign refinery have made the commitments required in paragraphs (f)(3)(iii) and (h)(7)(iii) of this section; and

(v) The foreign refiner has met the bond requirements of paragraph (k) of this section.

(2) In any case where a foreign refiner uses an individual refinery baseline before final approval under paragraph (r)(1) of this section, and the foreign refinery baseline values that ultimately are approved by EPA are more stringent than the early baseline values used by the foreign refiner, the foreign refiner shall recalculate its compliance, ab initio, using the baseline values approved by the EPA, and the foreign refiner shall be liable for any resulting violation of the motor vehicle highway diesel fuel requirements.

(s) *Additional requirements for petitions, reports and certificates.* Any petition for approval to produce motor vehicle diesel fuel subject to the diesel foreign refiner program, any alternative procedures under paragraph (p) of this section, any report or other submission required by paragraph (c), (f)(2), or (i) of this section, and any certification under paragraph (d)(3) of this section shall be:

(1) Submitted in accordance with procedures specified by the Administrator, including use of any forms that may be specified by the Administrator.

(2) Be signed by the president or owner of the foreign refiner company, or by that person's immediate designee, and shall contain the following declaration:

I hereby certify: (1) that I have actual authority to sign on behalf of and to bind

EXHIBIT J

[insert name of foreign refiner] with regard to all statements contained herein; (2) that I am aware that the information contained herein is being certified, or submitted to the United States Environmental Protection Agency, under the requirements of 40 CFR Part 80, subpart I, and that the information is material for determining compliance under these regulations; and (3) that I have read and understand the information being certified or submitted, and this information is true, complete and correct to the best of my knowledge and belief after I have taken reasonable and appropriate steps to verify the accuracy thereof.

I affirm that I have read and understand the provisions of 40 CFR Part 80, subpart I, including 40 CFR 80.620 apply to [insert name of foreign refiner]. Pursuant to Clean Air Act section 113(c) and Title 18, United States Code, section 1001, the penalty for furnishing false, incomplete or misleading information in this certification or submission is a fine of up to $10,000 U.S., and/or imprisonment for up to five years.

PART 86—CONTROL OF EMISSIONS FROM NEW AND IN-USE HIGHWAY VEHICLES AND ENGINES

11. The authority citation for part 86 continues to read as follows:

Authority: 42 U.S.C. 7401–7671q.

12. Section 86.1 is amended by revising paragraph (b)(1) to read as follows:

§ 86.1 Reference materials.

* * * * *

(b) * * *

(1) *ASTM material.* The following table sets forth material from the American Society for Testing and Materials that has been incorporated by reference. The first column lists the number and name of the material. The second column lists the section(s) of this part, other than this section, in which the matter is referenced. Copies of these materials may be obtained from American Society for Testing and Materials, 100 Barr Harbor Drive, West Conshohocken, PA 19428–2959.

Document number and name	40 CFR part 86 reference
ASTM E29–67 (Reapproved 1980), Standard Recommended Practice for Indicating Which Places of Figures Are To Be Considered Significant in Specified Limiting Values.	86.1105–87.
ASTM E29–90, Standard Practice for Using Significant Digits in Test Data to Determine Conformance with Specifications.	86.609–84; 86.609–96; 86.609–97; 86.609–98; 86.1009–84; 86.1009–96; 86.1442; 86.1708–99; 86.1709–99; 86.1710–99; 86.1728–99.
ASTM D5186–91, Standard Test Method for Determination of Aromatic Content of Diesel Fuels by Supercritical Fluid Chromatography.	86.113–07; 86.1313–91; 86.1313–94; 86.1313–98; 1313–2007.
ASTM D2163–91, Standard Test Method for Analysis of Liquefied Petroleum (LP) Gases and Propane Concentrates by Gas Chromatography.	86.113–94; 86.1213–94; 86.1313–94.
ASTM D1945–91, Standard Test Method for Analysis of Natural Gas By Gas Chromatography	86.113–94; 86.513–94; 86.1213–94; 86.1313–94.
ASTM E29–93a, Standard Practice for Using Significant Digits in Test Data to Determine Conformance with Specifications.	86.098–15; 86.004–15; 86.007–11; 86.007–15; 86.1803–01; 86.1823–01; 86.1824–01; 86.1825–01; 86.1837–01.
ASTM D2986–95a, (Reapproved 1999) Standard Practice for Evaluation of Air Assay Media by the Monodisperse DOP (Dioctyl Phthalate) Smoke Test.	86.1310–2007.
ASTM F1471–93, Standard Test Method for Air Cleaning Performance of a High-Efficiency Particulate Air-Filter System.	86.1310–2007.

* * * * *

13. Section 86.004–2 is amended by adding in alphabetical order a definition of ''U.S.-directed production'' to read as follows:

§ 86.004–2 Definitions.

* * * * *

U.S.-directed production means the engines and/or vehicles (as applicable) produced by a manufacturer for which the manufacturer has reasonable assurance that sale was or will be made to ultimate purchasers in the United States, excluding engines and/or vehicles that are certified to state emission standards different than the emission standards in this part.

* * * * *

14. Section 86.004–28 is amended by adding paragraph (i) to read as follows:

§ 86.004–28 Compliance with emission standards.

* * * * *

(i) Emission results from heavy-duty engines equipped with exhaust aftertreatment may need to be adjusted to account for regeneration events. This provision only applies for engines equipped with emission controls that are regenerated on an infrequent basis. For the purpose of this paragraph (i), the term ''regeneration'' means an event during which emissions levels change while the aftertreatment performance is being restored by design. Examples of regenerations are increasing exhaust gas temperature to remove sulfur from an adsorber or increasing exhaust gas temperature to oxidize PM in a trap. For the purpose of this paragraph (i), the term ''infrequent'' means having an expected frequency of less than once per transient test cycle. Calculation and use of adjustment factors are described in paragraphs (i)(1) through (i)(5) of this section.

(1) *Development of adjustment factors.* Manufacturers must develop separate pairs of adjustment factors (an upward adjustment factor and a downward adjustment factor) for each pollutant based on measured emission data and observed regeneration frequency. Adjustment factors may be carried-over to subsequent model years or carried-across to other engine families only where the Administrator determines that such carry-over or carry-across is consistent with good engineering judgment. Adjustment factors should generally apply to an entire engine family, but manufacturers may develop separate adjustment factors for different engine configurations within an engine family. All adjustment factors for regeneration are additive.

(2) *Calculation of adjustment factors.* The adjustment factors are calculated from the following parameters: the measured emissions from a test in which the regeneration occurs (EF_H), the measured emissions from a test in which the regeneration does not occur (EF_L), and the frequency of the regeneration event in terms of fraction of tests during which the regeneration occurs (F). The average emission rate (EF_A) is calculated as:

$$EF_A = (F)(EF_H) + (1 - F)(EF_L)$$

(i) The upward adjustment factor (UAF) is calculated as: $UAF = EF_A - EF_L$.

(ii) The downward adjustment factor (DAF) is calculated as: $DAF = EF_A - EF_H$.

(3) *Use of adjustment factors.* Upward adjustment factors are added to

EXHIBIT J

measured emission rates for all tests in which the regeneration does not occur. Downward adjustment factors are added to measured emission rates for all tests in which the regeneration occurs. The occurrence of the regeneration must be identified in a manner that is readily apparent during all testing. Where no regeneration is identified, the upward adjustment factor shall be applied.

(4) *Sample calculation.* If EF_L is 0.10 g/bhp-hr, EF_H is 0.50 g/bhp-hr, and F is 0.1 (*i.e.*, the regeneration occurs once for each ten tests), then:

EF_A = (0.1)(0.5 g/bhp-hr) + (1.0 − 0.1)(0.1 g/bhp-hr) = 0.14 g/bhp-hr

UAF = 0.14 g/bhp-hr − 0.10 g/bhp-hr = 0.04 g/bhp-hr

DAF = 0.14 g/bhp-hr − 0.50 g/bhp-hr = −0.36 g/bhp-hr

(5) *Options.* (i) A manufacturer may elect to omit adjustment factors for one or more of its engine families (or configurations) because the effect of the regeneration is small, or because it is not practical to identify when regenerations occur. In these cases, no upward or downward adjustment factor shall be added, and the manufacturer is liable for compliance with the emission standards for all tests, without regard to whether a regeneration occurs.

(ii) Upon request by the manufacturer, the Administrator may account for regeneration events differently than is provided in this paragraph (i). However, this option only applies for events that occur extremely infrequently, and which cannot be practically addressed using the adjustment factors described in this paragraph (i).

15. Section 86.004–40 is amended by revising the introductory text to read as follows:

§ 86.004–40 Heavy-duty engine rebuilding practices.

The provisions of this section are applicable to heavy-duty engines subject to model year 2004 or later standards and are applicable to the process of engine rebuilding (or rebuilding a portion of an engine or engine system). The process of engine rebuilding generally includes disassembly, replacement of multiple parts due to wear, and reassembly, and also may include the removal of the engine from the vehicle and other acts associated with rebuilding an engine. Any deviation from the provisions contained in this section is a prohibited act under section 203(a)(3) of the Clean Air Act (42 U.S.C. 7522(a)(3)).

* * * * *

16. Section 86.005–10 is amended by revising paragraph (a)(1)(ii)(C) to read as follows:

§ 86.005–10 Emission standards for 2005 and later model year Otto-cycle heavy-duty engines and vehicles.

* * * * *

(a) * * *

(1) * * *

(ii) * * *

(C) *Idle carbon monoxide.* For all Otto-cycle HDEs utilizing aftertreatment technology, and not certified to the onboard diagnostics requirements of § 86.005–17: 0.50 percent of exhaust gas flow at curb idle.

* * * * *

17. Section 86.005–17 is amended by revising paragraphs (b) introductory text, (b)(1), (b)(2), (b)(3), (b)(4), (b)(5), and (k) to read as follows:

§ 86.005–17 On-board diagnostics.

* * * * *

(b) *Malfunction descriptions.* The OBD system must detect and identify malfunctions in all monitored emission-related engine systems or components according to the following malfunction definitions as measured and calculated in accordance with test procedures set forth in subpart N of this part (engine-based test procedures) excluding the test procedure referred to as the ''Supplemental emission test; test cycle and procedures'' contained in § 86.1360, and excluding the test procedure referred to as the ''Not-To-Exceed Test Procedure'' contained in § 86.1370, and excluding the test procedure referred to as the ''Load Response Test'' contained in § 86.1380.

(1) *Catalysts and particulate traps.* (i) *Otto-cycle.* Catalyst deterioration or malfunction before it results in an increase in NMHC (or NO_X+NMHC, as applicable) emissions 1.5 times the NMHC (or NO_X+NMHC, as applicable) standard or FEL, as compared to the NMHC (or NO_X+NMHC, as applicable) emission level measured using a representative 4000 mile catalyst system.

(ii) *Diesel.* (A) If equipped, catalyst deterioration or malfunction before it results in exhaust emissions exceeding 1.5 times the applicable standard or FEL for NO_X (or NO_X+NMHC, as applicable) or PM. This requirement applies only to reduction catalysts; monitoring of oxidation catalysts is not required. This monitoring need not be done if the manufacturer can demonstrate that deterioration or malfunction of the system will not result in exceedance of the threshold.

(B) If equipped with a particulate trap, catastrophic failure of the device must be detected. Any particulate trap whose complete failure results in exhaust emissions exceeding 1.5 times the applicable standard or FEL for NMHC (or NO_X+NMHC, as applicable) or PM must be monitored for such catastrophic failure. This monitoring need not be done if the manufacturer can demonstrate that a catastrophic failure of the system will not result in exceedance of the threshold.

(2) *Engine Misfire.* (i) *Otto-cycle.* Engine misfire resulting in exhaust emissions exceeding 1.5 times the applicable standard or FEL for NMHC, NO_X (or NO_X+NMHC, as applicable) or CO; and any misfire capable of damaging the catalytic converter.

(ii) *Diesel.* Lack of cylinder combustion must be detected.

(3) Oxygen sensors. If equipped, oxygen sensor deterioration or malfunction resulting in exhaust emissions exceeding 1.5 times the applicable standard or FEL for NMHC, NO_X (or NO_X+NMHC, as applicable) or CO.

(4) *Evaporative leaks.* If equipped, any vapor leak in the evaporative and/or refueling system (excluding the tubing and connections between the purge valve and the intake manifold) greater than or equal in magnitude to a leak caused by a 0.040 inch diameter orifice; an absence of evaporative purge air flow from the complete evaporative emission control system. Where fuel tank capacity is greater than 25 gallons, the Administrator may, following a request from the manufacturer, revise the size of the orifice to the smallest orifice feasible, based on test data, if the most reliable monitoring method available cannot reliably detect a system leak equal to a 0.040 inch diameter orifice.

(5) *Other emission control systems.* Any deterioration or malfunction occurring in an engine system or component directly intended to control emissions, including but not necessarily limited to, the exhaust gas recirculation (EGR) system, if equipped, the secondary air system, if equipped, and the fuel control system, singularly resulting in exhaust emissions exceeding 1.5 times the applicable emission standard or FEL for NMHC, NO_X (or NO_X+NMHC, as applicable), CO or diesel PM. For engines equipped with a secondary air system, a functional check, as described in paragraph (b)(6) of this section, may satisfy the requirements of this paragraph (b)(5) provided the manufacturer can demonstrate that deterioration of the flow distribution system is unlikely. This demonstration is subject to Administrator approval and, if the demonstration and associated functional check are approved, the diagnostic system must indicate a malfunction when some degree of secondary airflow is not detectable in

EXHIBIT J

the exhaust system during the check. For engines equipped with positive crankcase ventilation (PCV), monitoring of the PCV system is not necessary provided the manufacturer can demonstrate to the Administrator's satisfaction that the PCV system is unlikely to fail.

* * * * *

(k) *Phase-in for heavy-duty engines.* Manufacturers of heavy-duty engines must comply with the OBD requirements in this section according to the following phase-in schedule, based on the percentage of projected engine sales within each category. The 2004 model year requirements in the following phase-in schedule are applicable only to heavy-duty Otto-cycle engines where the manufacturer has selected Otto-cycle Option 1 or Option 2 for alternative 2004 compliance according to § 86.005–01(c)(1) or (2). The 2005 through 2007 requirements in the following phase-in schedule apply to all heavy-duty engines intended for use in a heavy-duty vehicle weighing 14,000 pounds GVWR or less. Manufacturers may exempt 2005 model year diesel heavy-duty engines from the requirements of this section if the 2005 model year commences before July 31, 2004 from the requirements of this section. Manufacturers may exempt 2005 model year Otto-cycle heavy-duty engines and vehicles from the requirements of this section if the manufacturer has selected Otto-cycle Option 3 and if the 2005 model year commences before July 31, 2004. For the purposes of calculating compliance with the phase-in provisions of this paragraph (k), heavy-duty engines may be combined with heavy-duty vehicles subject to the phase-in requirements of paragraph § 86.1806–05(l). The OBD Compliance phase-in table follows:

OBD COMPLIANCE PHASE-IN FOR HEAVY-DUTY ENGINES INTENDED FOR USE IN A HEAVY-DUTY VEHICLE WEIGHING 14,000 POUNDS GVWR OR LESS

Model year	Otto-cycle phase-in based on projected sales	Diesel Phase-in based on projected sales
2004 MY	Applicable only to Otto-cycle engines complying with Options 1 or 2; 40% compliance; alternative fuel waivers available.	
2005 MY	60% compliance; alternative fuel waivers available	50% compliance; alternative fuel waivers available.
2006 MY	80% compliance; alternative fuel waivers available	50% compliance; alternative fuel waivers available.
2007 MY	80% compliance; alternative fuel waivers available	100% compliance.
2008+ MY	100% compliance	100% compliance.

18. Section 86.007–11 is amended by revising the introductory text, paragraphs (a) through (a)(2), (a)(3), (a)(4)(i), (b)(3) through (d), and adding paragraphs (a)(4)(iv)(C), (a)(4)(v), (e), (f), (g) and (h) to read as follows:

§ 86.007–11 Emission standards and supplemental requirements for 2007 and later model year diesel heavy-duty engines and vehicles.

This section applies to new 2007 and later model year diesel HDEs. Section 86.007–11 includes text that specifies requirements that differ from § 86.004–11. Where a paragraph in § 86.004–11 is identical and applicable to § 86.007–11, this may be indicated by specifying the corresponding paragraph and the statement ''[Reserved]. For guidance see § 86.004–11.''.

(a)(1) Exhaust emissions from new 2007 and later model year diesel HDEs shall not exceed the following:

(i) *Oxides of Nitrogen (NO_X).* (A) 0.20 grams per brake horsepower-hour (0.075 grams per megajoule).

(B) A manufacturer may elect to include any or all of its diesel HDE families in any or all of the NO_X and NO_X plus NMHC emissions ABT programs for HDEs, within the restrictions described in § 86.007–15 or § 86.004–15. If the manufacturer elects to include engine families in any of these programs, the NO_X FELs may not exceed the following FEL caps: 2.00 grams per brake horsepower-hour (0.75 grams per megajoule) for model years before 2010; 0.50 grams per brake horsepower-hour (0.19 grams per megajoule) for model years 2010 and later. This ceiling value applies whether credits for the family are derived from averaging, banking, or trading programs.

(ii)(A) *Non-Methane Hydrocarbons (NMHC) for engines fueled with either diesel fuel, natural gas, or liquefied petroleum gas.* 0.14 grams per brake horsepower-hour (0.052 grams per megajoule).

(B) *Non-Methane Hydrocarbon Equivalent (NMHCE) for engines fueled with methanol.* 0.14 grams per brake horsepower-hour (0.052 grams per megajoule).

(iii) *Carbon monoxide.* (A) 15.5 grams per brake horsepower-hour (5.77 grams per megajoule).

(B) 0.50 percent of exhaust gas flow at curb idle (methanol-, natural gas-, and liquefied petroleum gas-fueled diesel HDEs only). This does not apply for vehicles certified to the requirements of § 86.005–17

(iv) *Particulate.* (A) 0.01 grams per brake horsepower-hour (0.0037 grams per megajoule).

(B) A manufacturer may elect to include any or all of its diesel HDE families in any or all of the particulate ABT programs for HDEs, within the restrictions described in § 86.007–15 or other applicable sections. If the manufacturer elects to include engine families in any of these programs, the particulate FEL may not exceed 0.02 grams per brake horsepower-hour (0.0075 grams per megajoule).

(2) The standards set forth in paragraph (a)(1) of this section refer to the exhaust emitted over the operating schedule set forth in paragraph (f)(2) of appendix I to this part, and measured and calculated in accordance with the procedures set forth in subpart N or P of this part, except as noted in § 86.007–23(c)(2).

(3) *SET* (i) The weighted average exhaust emissions, as determined under § 86.1360–2007(e)(5) pertaining to the supplemental emission test cycle, for each regulated pollutant shall not exceed 1.0 times the applicable emission standards or FELs specified in paragraph (a)(1) of this section.

(ii) For engines not having a NO_X FEL less than1.5 g/bhp-hr, gaseous exhaust emissions shall not exceed the steady-state interpolated values determined by the Maximum Allowable Emission Limits (for the corresponding speed and load), as determined under § 86.1360–2007(f), when the engine is operated in the steady-state control area defined under § 86.1360–2007(d).

(4) *NTE* (i)(A) The brake-specific exhaust NMHC or NO_X emissions in g/bhp-hr, as determined under § 86.1370–2007 pertaining to the not-to-exceed test procedures, shall not exceed 1.5 times the applicable NMHC or NO_X emission standards or FELs specified in paragraph (a)(1) of this section, during engine and vehicle operation specified

EXHIBIT J

in paragraph (a)(4)(ii) of this section except as noted in paragraph (a)(4)(iii) of this section.

(B) For engines not having a NO_X FEL less than1.50 g/bhp-hr, the brake-specific NO_X and NMHC exhaust emissions in g/bhp-hr, as determined under § 86.1370–2007 pertaining to the not-to-exceed test procedures, shall not exceed 1.25 times the applicable emission standards or FELs specified in paragraph (a)(1) of this section (or of § 86.004–11, as allowed by paragraph (g) of this section), during engine and vehicle operation specified in paragraph (a)(4)(ii) of this section except as noted in paragraph (a)(4)(iii) of this section.

(C) The brake-specific exhaust PM emissions in g/bhp-hr, as determined under § 86.1370–2007 pertaining to the not-to-exceed test procedures, shall not exceed 1.5 times the applicable PM emission standards or FEL (for FELs above the standard only) specified in paragraph (a)(1) of this section, during engine and vehicle operation specified in paragraph (a)(4)(ii) of this section except as noted in paragraph (a)(4)(iii) of this section.

(D) The brake-specific exhaust CO emissions in g/bhp-hr, as determined under § 86.1370–2007 pertaining to the not-to-exceed test procedures, shall not exceed 1.25 times the applicable CO emission standards or FEL specified in paragraph (a)(1) of this section, during engine and vehicle operation specified in paragraph (a)(4)(ii) of this section except as noted in paragraph (a)(4)(iii) of this section.

* * * * *

(iv) * * *

(C) For model years 2010 through 2013, the Administrator may allow up to three deficiencies per engine family. The provisions of paragraphs (a)(4)(iv)(A) and (B) of this section apply for deficiencies allowed by this paragraph (a)(4)(iv)(C). In determining whether to allow the additional deficiencies, the Administrator may consider any relevant factors, including the factors identified in paragraph (a)(4)(iv)(A) of this section. If additional deficiencies are approved, the Administrator may set any additional conditions that he/she determines to be appropriate.

(v) The emission limits specified in paragraphs (a)(3) and (a)(4) of this section shall be rounded to the same number of significant figures as the applicable standards in paragraph (a)(1) of this section using ASTM E29–93a (Incorporated by reference at § 86.1).

* * * * *

(b)(3) and (b)(4) [Reserved]. For guidance see § 86.004–11.

(c) No crankcase emissions shall be discharged directly into the ambient atmosphere from any new 2007 or later model year diesel HDE, with the following exception: HDEs equipped with turbochargers, pumps, blowers, or superchargers for air induction may discharge crankcase emissions to the ambient atmosphere if the emissions are added to the exhaust emissions (either physically or mathematically) during all emission testing. Manufacturers taking advantage of this exception must manufacture the engines so that all crankcase emission can be routed into a dilution tunnel (or other sampling system approved in advance by the Administrator), and must account for deterioration in crankcase emissions when determining exhaust deterioration factors. For the purpose of this paragraph (c), crankcase emissions that are routed to the exhaust upstream of exhaust aftertreatment during all operation are not considered to be ''discharged directly into the ambient atmosphere.''

(d) Every manufacturer of new motor vehicle engines subject to the standards prescribed in this section shall, prior to taking any of the actions specified in section 203(a)(1) of the Act, test or cause to be tested motor vehicle engines in accordance with applicable procedures in subpart I or N of this part to ascertain that such test engines meet the requirements of paragraphs (a), (b), (c), and (d) of this section.

(e) [Reserved]. For guidance see § 86.004–11.

(f) (1) Model year 2007 and later diesel-fueled heavy-duty engines and vehicles for sale in Guam, American Samoa, or the Commonwealth of the Northern Mariana Islands shall be subject to the same standards and requirements as apply to 2006 model year diesel heavy-duty engines and vehicles, but only if the vehicle or engine bears a permanently affixed label stating:

THIS ENGINE (or VEHICLE, as applicable) CONFORMS TO US EPA EMISSION STANDARDS APPLICABLE TO MODEL YEAR 2006. THIS ENGINE (or VEHICLE, as applicable) DOES NOT CONFORM TO US EPA EMISSION REQUIREMENTS IN EFFECT AT TIME OF PRODUCTION AND MAY NOT BE IMPORTED INTO THE UNITED STATES OR ANY TERRITORY OF THE UNITED STATES EXCEPT GUAM, AMERICAN SAMOA, OR THE COMMONWEALTH OF THE NORTHERN MARIANA ISLANDS.

(2) The importation or sale of such a vehicle or engine for use at any location U.S. other than Guam, American Samoa, or the Commonwealth of the Northern Mariana Islands shall be considered a violation of section 203(a)(1) of the Clean Air Act. In addition, vehicles or vehicle engines subject to this exemption may not subsequently be imported or sold into any state or territory of the United States other than Guam, American Samoa, or Commonwealth of the Northern Mariana Islands.

(g) Phase-in options. (1) For model years 2007, 2008, and 2009, manufacturers may certify some of their engine families to the combined NO_X plus NMHC standard applicable to model year 2006 engines under § 86.004–11, in lieu of the separate NO_X and NMHC standards specified in paragraph (a)(1) of this section. These engines must comply with all other requirements applicable to model year 2007 engines. The combined number of engines in the engine families certified to the 2006 combined NO_X plus NMHC standard may not exceed 50 percent of the manufacturer's U.S.-directed production of heavy-duty diesel motor vehicle engines for model year 2007, 2008, or 2009, except as explicitly allowed by this paragraph (g).

(2)(i) Manufacturers certifying engines to all of the applicable standards listed in paragraph (a) and (c) of this section (without using credits) prior to model year 2007 may reduce the number of engines that are required to meet the standards listed in paragraph (a) of this section in model year 2007, 2008 and/or 2009, taking into account the phase-in option provided in paragraph (g)(1) of this section. For every two engines that are certified early, the manufacturer may reduce the number of engines that are required by paragraph (g)(1) of this section to meet standards listed in paragraph (a)(1) of this section by three engines. For example, if a manufacturer produces 100 heavy-duty diesel engines in 2006 that meet all of the applicable standards listed in paragraph (a) of this section, and it produced 10,000 heavy-duty diesel engines in 2007, then only 4,850 ((10,000)(0.50) − (100)(1.5)) of the engines would need to comply with the standards listed in paragraph (a) of this section.

(ii) Manufacturers certifying engines to the PM standards listed in paragraph (a), and to all of the applicable standards in paragraph (c) of this section (without using credits) prior to model year 2007 may reduce the number of engines that are required to meet the PM standard listed in paragraph (a) of this section in model year 2007, 2008 and/or 2009. For every two engines that are certified to the PM standard early, the manufacturer may reduce the number of engines that are otherwise required to meet the PM

EXHIBIT J

standard listed in paragraph (a)(1) of this section by three engines.

(3) Manufacturers may initially base compliance with the phase-in requirements of paragraph (g)(1) or (g)(2) of this section on projected U.S.-directed production estimates. This is allowed for model year 2007 and/or 2008. However, if a manufacturer's actual U.S. directed production volume of engines that comply with the model year 2007 NO_X and NMHC standards is less than the required amount, the shortfall (in terms of number of engines) must be made up prior to 2010. For example, if a manufacturer plans in good faith to produce 50 percent of its projected 10,000 2007 engines (i.e., 5,000 engines) in compliance with the 2007 NO_X and NMHC standard, but is only able to produce 4,500 such engines of an actual 10,000 2007 engines, the manufacturer would need to produce an extra 500 engines in 2008 or 2009 in compliance with the 2007 NO_X and NMHC standard. The deficit allowed by this paragraph (g)(3) may not exceed 25 percent of the U.S. directed production volume.

(4) Manufacturers certifying engines to a voluntary NO_X standard of 0.10 g/bhp-hr (without using credits) in addition to all of the other applicable standards listed in paragraphs (a) and (c) of this section prior to model year 2007 may reduce the number of engines that are required to meet the standards listed in paragraph (a)(1) of this section in model year 2007, 2008 and/or 2009, taking into account the phase-in option provided in paragraph (g)(1) of this section. For every engine that is certified early under this provision, the manufacturer may reduce the number of engines that are required by paragraph (g)(1) of this section to meet the standards listed in paragraph (a)(1) of this section by two engines.

(5) For engines certified under paragraph (g)(1) of this section to the NO_X+NMHC standard in § 86.004–11, the standards or FELs to which they are certified shall be used for the purposes of paragraphs (a)(3) and (a)(4) of this section.

(h)(1) For model years prior to 2012, for purposes of determining compliance after title or custody has transferred to the ultimate purchaser, for engines having a NO_X FEL no higher than 1.30 g/bhp-hr, the applicable compliance limit shall be determined by adding the applicable adjustment from paragraph (h)(2) of this section to the otherwise applicable standard or FEL for NO_X.

(2)(i) For engines with 110,000 or fewer miles, the adjustment is 0.10 g/bhp-hr.

(ii) For engines with 110,001 to 185,000 miles, the adjustment is 0.15 g/bhp-hr.

(iii) For engines with 185,001 or more miles, the adjustment is 0.20 g/bhp-hr.

(3) For model years prior to 2012, for purposes of determining compliance after title or custody has transferred to the ultimate purchaser, the applicable compliance limit shall be determined by adding 0.01 g/bhp-hr to the otherwise applicable standard or FEL for PM.

19. A new § 86.007–is added to Subpart A to read as follows:

§ 86.007–15 NO_X and particulate averaging, trading, and banking for heavy-duty engines.

Section 86.007–15 includes text that specifies requirements that differ from § 86.004–15. Where a paragraph in § 86.004–15 is identical and applicable to § 86.007–15, this may be indicated by specifying the corresponding paragraph and the statement ''[Reserved]. For guidance see § 86.004–15.''

(a) through (l) [Reserved]. For guidance see § 86.004–15.

(m) The following provisions apply for model year 2007 and later engines (including engines certified during years 2007–2009 under the phase-in provisions of § 86.007–11(g)(1), § 86.005–10(a), or § 86.008–10(f)(1)). These provisions apply instead of the provisions of paragraphs § 86.004–15 (a) through (k) to the extent that they are in conflict.

(1) Manufacturers of Otto-cycle engines may participate in an NMHC averaging, banking and trading program to show compliance with the standards specified in § 86.008–10. The generation and use of NMHC credits are subject to the same provisions in paragraphs § 86.004–15 (a) through (k) that apply for NO_X plus NMHC credits, except as otherwise specified in this section.

(2) Credits are calculated as NO_X or NMHC credits for engines certified to separate NO_X and NMHC standards. NO_X plus NMHC credits (including banked credits and credits that are generated during years 2007–2009 under the phase-in provisions of § 86.007–11(g)(1), § 86.005–10(a), or § 86.008–10(f)(1)) may be used to show compliance with 2007 or later NO_X standards (NO_X or NMHC standards for Otto-cycle engines), subject to an 0.8 discount factor (e.g., 100 grams of NO_X plus NMHC credits is equivalent to 80 grams of NO_X credits).

(3) NO_X or NMHC (or NO_X plus NMHC) credits may be exchanged between heavy-duty Otto-cycle engine families certified to the engine standards of this subpart and heavy-duty Otto-cycle engine families certified to the chassis standards of subpart S of this part, subject to an 0.8 discount factor (e.g., 100 grams of NO_X (or NO_X plus NMHC) credits generated from engines would be equivalent to 80 grams of NO_X credits if they are used in the vehicle program of subpart S, and vice versa).

(4) Credits that were previously discounted when they were banked according to paragraph (c) of § 86.004–15, are subject to an additional discount factor of 0.888 instead of the 0.8 discount factor otherwise required by paragraph (m)(2) or (m)(3) of this section. This results in a total discount factor of 0.8 ($0.9 \times 0.888 = 0.8$).

(5) For diesel engine families, the combined number of engines certified to FELs higher than 0.50 g/bhp-hr using banked NO_X (and/or NO_X plus NMHC) credits in any given model year may not exceed 10 percent of the manufacturer's U.S.-directed production of engines in all heavy-duty diesel engine families for that model year.

(6) The FEL must be expressed to the same number of decimal places as the standard (generally, one-hundredth of a gram per brake horsepower-hour). For engines certified to standards expressed only one-tenth of a gram per brake horsepower-hour, if the FEL is below 1.0, then add a zero to the standard in the second decimal place and express the FEL to nearest one-hundredth of a gram per brake horsepower-hour.

(7) Credits are to be rounded to the nearest one-hundredth of a Megagram using ASTM E29–93a (Incorporated by reference at § 86.1).

(8) Credits generated for 2007 and later model year diesel engine families, or generated for 2008 and later model year Otto-cycle engine families are not discounted (except as specified in paragraph (m)(2) or (m)(3) of this section), and do not expire.

(9) For the purpose of using or generating credits during a phase-in of new standards, a manufacturer may elect to split an engine family into two subfamilies (e.g., one which uses credits and one which generates credits). The manufacturer must indicate in the application for certification that the engine family is to be split, and may assign the numbers and configurations of engines within the respective subfamilies at any time prior to the submission of the end-of-year report required by § 86.001–23.

(i) Manufacturers certifying a split diesel engine family to both the Phase 1 and Phase 2 standards with equally sized subfamilies may exclude the engines within that split family from end-of-year NO_X (or NO_X+NMHC) ABT calculations, provided that neither

EXHIBIT J

subfamily generates credits for use by other engine families, or uses banked credits, or uses averaging credits from other engine families. All of the engines in that split family must be excluded from the phase-in calculations of § 86.007–11(g)(1) (both from the number of engines complying with the standards being phased-in and from the total number of U.S.-directed production engines.)

(ii) Manufacturers certifying a split Otto-cycle engine family to both the Phase 1 and Phase 2 standards with equally sized subfamilies may exclude the engines within that split family from end-of-year NO_X (or NO_X+NMHC) ABT calculations, provided that neither subfamily generates credits for use by other engine families, or uses banked credits, or uses averaging credits from other engine families. All of the engines in that split family must be excluded from the phase-in calculations of § 86.008–10(f)(1) (both from the number of engines complying with the standards being phased-in and from the total number of U.S.-directed production engines.)

(iii) Manufacturers certifying a split engine family may label all of the engines within that family with a single NO_X or NO_X+NMHC FEL. The FEL on the label will apply for all SEA or other compliance testing.

(iv) Notwithstanding the provisions of paragraph (m)(9)(iii) of this section, for split families, the NO_X FEL shall be used to determine applicability of the provisions of § 86.007–11(a)(3)(ii), (a)(4)(i)(B), and (h)(1), and § 86.008–10(g).

(10) For model years 2007 through 2009, to be consistent with the phase-in provisions of § 86.007–11(g)(1), credits generated from engines in one diesel engine service class (e.g., light-heavy duty diesel engines) may be used for averaging by engines in a different diesel engine service class, provided the credits are calculated for both engine families using the conversion factor and useful life of the engine family using the credits, and the engine family using the credits is certified to the standards listed in § 86.007–11(a)(1). Banked or traded credits may not be used by any engine family in a different service class than the service class of the engine family generating the credits.

20. A new § 86.007–23 is added to Subpart A to read as follows:

§ 86.007–23 Required data.

Section 86.007–23 includes text that specifies requirements that differ from § 86.095–23, § 86.098–23, or § 86.001–23. Where a paragraph in § 86.095–23, § 86.098–23, or § 86.001–23 is identical and applicable to § 86.007–23, this may be indicated by specifying the corresponding paragraph and the statement ''[Reserved]. For guidance see § 86.095–23.'', ''[Reserved]. For guidance see § 86.098–23.'', or ''[Reserved]. For guidance see § 86.001–23.''.

(a) through (b)(1) [Reserved]. For guidance see § 86.098–23.

(b)(2) [Reserved]. For guidance see § 86.001–23.

(b)(3) and (b)(4) [Reserved]. For guidance see § 86.098–23.

(c) *Emission data.*—(1) *Certification vehicles.* The manufacturer shall submit emission data (including, methane, methanol, formaldehyde, and hydrocarbon equivalent, as applicable) on such vehicles tested in accordance with applicable test procedures and in such numbers as specified. These data shall include zero-mile data, if generated, and emission data generated for certification as required under § 86.000–26(a)(3). In lieu of providing emission data the Administrator may, on request of the manufacturer, allow the manufacturer to demonstrate (on the basis of previous emission tests, development tests, or other information) that the engine will conform with certain applicable emission standards of this part. Standards eligible for such manufacturer requests are those for idle CO emissions, smoke emissions, or particulate emissions from methanol-fueled or gaseous-fueled diesel-cycle certification vehicles, those for particulate emissions from Otto-cycle certification vehicles or gaseous-fueled vehicles, and those for formaldehyde emissions from petroleum-fueled vehicles. Also eligible for such requests are standards for total hydrocarbon emissions from model year 1994 and later certification vehicles. By separate request, including appropriate supporting test data, the manufacturer may request that the Administrator also waive the requirement to measure particulate or formaldehyde emissions when conducting Selective Enforcement Audit testing of Otto-cycle vehicles.

(2) *Certification engines.* The manufacturer shall submit emission data on such engines tested in accordance with applicable emission test procedures of this subpart and in such numbers as specified. These data shall include zero-hour data, if generated, and emission data generated for certification as required under § 86.000–26(c)(4). In lieu of providing emission data on idle CO emissions or particulate emissions from methanol-fueled or gaseous-fueled diesel-cycle certification engines, on particulate emissions from Otto-cycle engines, or on CO emissions from diesel-cycle certification engines, the Administrator may, on request of the manufacturer, allow the manufacturer to demonstrate (on the basis of previous emission tests, development tests, or other information) that the engine will conform with the applicable emission standards of this part. In lieu of providing emission data on smoke emissions from methanol-fueled or petroleum-fueled diesel certification engines, the Administrator may, on the request of the manufacturer, allow the manufacturer to demonstrate (on the basis of previous emission tests, development tests, or other information) that the engine will conform with the applicable emissions standards of this part. In lieu of providing emissions data on smoke emissions from diesel-cycle engines when conducting Selective Enforcement Audit testing under subpart K of this part, the Administrator may, on separate request of the manufacturer, allow the manufacturer to demonstrate (on the basis of previous emission tests, development tests, or other information) that the engine will conform with the applicable smoke emissions standards of this part .

(d) through (e)(1) [Reserved]. For guidance see § 86.098–23.

(e)(2) and (e)(3) [Reserved]. For guidance see § 86.001–23.

(f) through (g) [Reserved]. For guidance see § 86.095–23.

(h) through (k) [Reserved]. For guidance see § 86.098–23.

(l) [Reserved]. For guidance see § 86.095–23.

(m) [Reserved]. For guidance see § 86.098–23.

21. A new § 86.007–25 is added to Subpart A to read as follows:

§ 86.007–25 Maintenance.

Section 86.007–25 includes text that specifies requirements that differ from § 86.094–25, § 86.098–25, or § 86.004–25. Where a paragraph in § 86.094–25, § 86.098–25, or § 86.004–25 is identical and applicable to § 86.007–25, this may be indicated by specifying the corresponding paragraph and the statement ''[Reserved]. For guidance see § 86.094–25.'', ''[Reserved]. For guidance see § 86.098–25.'', or ''[Reserved]. For guidance see § 86.004–25.''.

(a) through (a)(2) [Reserved]. For guidance see § 86.004–25.

(b) introductory text through (b)(3)(ii) [Reserved]. For guidance see § 86.094–25.

(b)(3)(iii) through (b)(3)(v)(H) [Reserved]. For guidance see § 86.004–25.

EXHIBIT J

(b)(3)(vi)(A) through (b)(3)(vi)(D) [Reserved]. For guidance see § 86.094–25.

(b)(3)(vi)(E) through (b)(3)(vi)(J) [Reserved]. For guidance see § 86.098–25.

(b)(4) introductory text through (b)(4)(iii)(C) [Reserved]. For guidance see § 86.004–25.

(b)(4)(iii)(D) Particulate trap or trap oxidizer systems including related components (adjustment and cleaning only for filter element, replacement of the filter element is not allowed during the useful life).

(b)(4)(iii)(E) [Reserved]. For guidance see § 86.004–25.

(F) Catalytic converter (adjustment and cleaning only for catalyst beds, replacement of the bed is not allowed during the useful life).

(b)(4)(iii)(G) through (b)(6) [Reserved]. For guidance see § 86.004–25.

(b)(7) through (h) [Reserved]. For guidance see § 86.094–25.

(i) Notwithstanding the provisions of § 86.004–25(b)(4)(iii) introductory text through (b)(4)(iii)(C), paragraph (b)(4)(iii)(D) of this section, § 86.004–25(b)(4)(iii)(E), paragraph (b)(4)(iii)(F) of this section, § 86.004–25(b)(4)(iii)(G), and § 86.004–25(b)(6), manufacturers of heavy-duty engines may schedule replacement or repair of particulate trap (or trap oxidizer) systems or catalytic converters (including NO_X adsorbers), provided:

(1) The manufacturer demonstrates to the Administrator's satisfaction that the repair or replacement will be performed according to the schedule; and

(2) The manufacturer pays for the repair or replacement.

22. A new § 86.007–35 is added to Subpart A to read as follows:

§ 86.007–35 Labeling.

Section 86.007–35 includes text that specifies requirements that differ from § 86.095–35. Where a paragraph in § 86.095–35 is identical and applicable to § 86.007–35, this may be indicated by specifying the corresponding paragraph and the statement ''[Reserved]. For guidance see § 86.095–35.''.

(a) Introductory text through (a)(1)(iii)(L) [Reserved]. For guidance see § 86.095–35.

(a)(1)(iii)(M) [Reserved.]

(a)(1)(iii)(N)(*1*) For vehicles exempted from compliance with certain revised performance warranty procedures, as specified in § 86.096–21(j), a statement indicating the specific performance warranty test(s) of 40 CFR part 85, subpart W, not to be performed.

(*2*) For vehicles exempted from compliance with all revised performance warranty procedures, as specified in § 86.096–21(k), a statement indicating:

(*i*) That none of the performance warranty tests of 40 CFR part 85, subpart W, is to be performed; and

(*ii*) The name of the Administrator-approved alternative test procedure to be performed.

(2) Light-duty truck and heavy-duty vehicles optionally certified in accordance with the light-duty truck provisions.

(i) A legible, permanent label shall be affixed in a readily visible position in the engine compartment.

(ii) The label shall be affixed by the vehicle manufacturer who has been issued the certificate of conformity for such vehicle, in such a manner that it cannot be removed without destroying or defacing the label. The label shall not be affixed to any equipment which is easily detached from such vehicle.

(iii) The label shall contain the following information lettered in the English language in block letters and numerals, which shall be of a color that contrasts with the background of the label:

(A) The label heading: Important Vehicle Information;

(B) Full corporate name and trademark of the manufacturer;

(C) Engine displacement (in cubic inches or liters), engine family identification, and evaporative/refueling family;

(a)(2)(iii)(D) through (a)(2)(iii)(E) [Reserved]. For guidance see § 86.095–35.

(a)(2)(iii)(F) [Reserved]

(a)(2)(iii)(G) through (a)(2)(iii)(K) [Reserved]. For guidance see § 86.095–35.

(a)(2)(iii)(L) [Reserved]

(a)(2)(iii)(M) through (a)(2)(iii)(N) [Reserved]. For guidance see § 86.095–35.

(a)(2)(iii)(O)(l) For vehicles exempted from compliance with certain revised performance warranty procedures, as specified in § 86.096–21(j), a statement indicating the specific performance warranty test(s) of 40 CFR part 85, subpart W, not to be performed.

(*2*) For vehicles exempted from compliance with all revised performance warranty procedures, as specified in § 86.096–21(k), a statement indicating:

(*i*) That none of the performance warranty tests of 40 CFR part 85, subpart W, is to be performed, and

(*ii*) The name of the Administrator-approved alternative test procedure to be performed.

(a)(3) heading through (b) [Reserved]. For guidance see § 86.095–35.

(c) Model year 2007 and later diesel-fueled vehicles must include permanent readily visible labels on the dashboard (or instrument panel) and near all fuel inlets that state ''Use Low-Sulfur Diesel Fuel Only'' or ''Low-Sulfur Diesel Fuel Only''.

(d) through (i) [Reserved]. For guidance see § 86.095–35.

23. A new § 86.007–38 is added to Subpart A to read as follows:

§ 86.007–38 Maintenance instructions.

Section 86.007–38 includes text that specifies requirements that differ from those specified in § 86.094–38 or § 86.004–38. Where a paragraph in § 86.094–38 or § 86.004–38 is identical and applicable to § 86.007–38, this may be indicated by specifying the corresponding paragraph and the statement ''[Reserved]. For guidance see § 86.094–38.'', or ''[Reserved]. For guidance see § 86.004–38.''.

(a) through (f) [Reserved]. For guidance see § 86.004–38.

(g) [Reserved]. For guidance see § 86.094–38.

(h) [Reserved]. For guidance see § 86.004–38.

(i) For each new diesel-fueled engine subject to the standards prescribed in § 86.007–11, as applicable, the manufacturer shall furnish or cause to be furnished to the ultimate purchaser a statement that ''This engine must be operated only with low sulfur diesel fuel (that is, diesel fuel meeting EPA specifications for highway diesel fuel, including a 15 ppm sulfur cap).''

24. A new § 86.008–10 is added to subpart A to read as follows:

§ 86.008–10 Emission standards for 2008 and later model year Otto-cycle heavy-duty engines and vehicles.

Section 86.008–10 includes text that specifies requirements that differ from § 86.099–10. Where a paragraph in § 86.099–10 is identical and applicable to § 86.008–10, this may be indicated by specifying the corresponding paragraph and the statement ''[Reserved]. For guidance see § 86.099–10.''.

(a)(1) Exhaust emissions from new 2008 and later model year Otto-cycle HDEs shall not exceed:

(i)(A) *Oxides of Nitrogen (NO_X).* 0.20 grams per brake horsepower-hour (0.075 grams per megajoule).

(B) A manufacturer may elect to include any or all of its Otto-cycle HDE families in any or all of the NO_X and NO_X plus NMHC emissions ABT programs for HDEs, within the restrictions described in § 86.008–15 or § 86.004–15. If the manufacturer elects to include engine families in any of these programs, the NO_X FEL may not exceed 0.50 grams per brake horsepower-hour (0.26 grams per

EXHIBIT J

megajoule). This ceiling value applies whether credits for the family are derived from averaging, banking, or trading programs. The NO_X FEL cap is 0.80 for model years before 2011 for manufacturers choosing to certify to the 1.5 g/bhp-hr NO_X+NMHC standard in 2003 or 2004, in accordance with § 86.005–10(f).

(ii)(A) *Non-methane Hydrocarbons (NMHC) for engines fueled with either gasoline, natural gas, or liquefied petroleum gas.* 0.14 grams per brake horsepower-hour (0.052grams per megajoule).

(B) *Non-methane Hydrocarbon Equivalent (NMHCE) for engines fueled with methanol.* 0.14 grams per brake horsepower-hour (0.052grams per megajoule).

(C) A manufacturer may elect to include any or all of its Otto-cycle HDE families in any or all of the NMHC emissions ABT programs for HDEs, within the restrictions described in § 86.008–15 or § 86.004–15. If the manufacturer elects to include engine families in any of these programs, the NMHC FEL may not exceed 0.30 grams per brake horsepower-hour. This ceiling value applies whether credits for the family are derived from averaging, banking, or trading programs. The NMHC FEL cap is 0.40 for model years before 2011 for manufacturers choosing to certify to the 1.5 g/bhp-hr NO_X+NMHC in 2004, as allowed in § 86.005–10.

(iii)(A) *Carbon monoxide.* 14.4 grams per brake horsepower-hour (5.36 grams per megajoule).

(B) *Idle Carbon Monoxide.* For all Otto-cycle HDEs utilizing aftertreatment technology, and not certified to the onboard diagnostics requirements of § 86.005–17: 0.50 percent of exhaust gas flow at curb idle.

(iv) *Particulate.* 0.01grams per brake horsepower-hour (0.0037grams per megajoule).

(2) The standards set forth in paragraph (a)(1) of this section refer to the exhaust emitted over the operating schedule set forth in paragraph (f)(1) of appendix I to this part, and measured and calculated in accordance with the procedures set forth in subpart N or P of this part.

(3) [Reserved]

(4) [Reserved]

(b) Evaporative emissions from heavy-duty vehicles shall not exceed the following standards. The standards apply equally to certification and in-use vehicles. The spitback standard also applies to newly assembled vehicles. For certification vehicles only, manufacturers may conduct testing to quantify a level of nonfuel background emissions for an individual test vehicle. Such a demonstration must include a description of the source(s) of emissions and an estimated decay rate. The demonstrated level of nonfuel background emissions may be subtracted from emission test results from certification vehicles if approved in advance by the Administrator.

(1) Hydrocarbons (for vehicles equipped with gasoline-fueled, natural gas-fueled or liquefied petroleum gas-fueled engines).

(i) For vehicles with a Gross Vehicle Weight Rating of up to 14,000 lbs:

(A)(*1*) For the full three-diurnal test sequence described in § 86.1230–96, diurnal plus hot soak measurements: 1.4 grams per test.

(*2*) For the supplemental two-diurnal test sequence described in § 86.1230–96, diurnal plus hot soak measurements (gasoline-fueled vehicles only): 1.75 grams per test.

(B) Running loss test (gasoline-fueled vehicles only): 0.05 grams per mile.

(C) Fuel dispensing spitback test (gasoline-fueled vehicles only): 1.0 grams per test.

(ii) For vehicles with a Gross Vehicle Weight Rating of greater than 14,000 lbs:

(A)(*1*) For the full three-diurnal test sequence described in § 86.1230–96, diurnal plus hot soak measurements: 1.9 grams per test.

(*2*) For the supplemental two-diurnal test sequence described in § 86.1230–96, diurnal plus hot soak measurements (gasoline-fueled vehicles only): 2.3 grams per test.

(B) Running loss test (gasoline-fueled vehicles only): 0.05 grams per mile.

(2) Total Hydrocarbon Equivalent (for vehicles equipped with methanol-fueled engines).

(i) For vehicles with a Gross Vehicle Weight Rating of up to 14,000 lbs:

(A)(*1*) For the full three-diurnal test sequence described in § 86.1230–96, diurnal plus hot soak measurements: 1.4 grams carbon per test.

(*2*) For the supplemental two-diurnal test sequence described in § 86.1230–96, diurnal plus hot soak measurements: 1.75 grams carbon per test.

(B) Running loss test: 0.05 grams carbon per mile.

(C) Fuel dispensing spitback test: 1.0 grams carbon per test.

(ii) For vehicles with a Gross Vehicle Weight Rating of greater than 14,000 lbs:

(A)(*1*) For the full three-diurnal test sequence described in § 86.1230–96, diurnal plus hot soak measurements: 1.9 grams carbon per test.

(*2*) For the supplemental two-diurnal test sequence described in § 86.1230–96, diurnal plus hot soak measurements: 2.3 grams carbon per test.

(B) Running loss test: 0.05 grams carbon per mile.

(3)(i) For vehicles with a Gross Vehicle Weight Rating of up to 26,000 lbs, the standards set forth in paragraphs (b)(1) and (b)(2) of this section refer to a composite sample of evaporative emissions collected under the conditions and measured in accordance with the procedures set forth in subpart M of this part.

(ii) For vehicles with a Gross Vehicle Weight Rating of greater than 26,000 lbs., the standards set forth in paragraphs (b)(1)(ii) and (b)(2)(ii) of this section refer to the manufacturer's engineering design evaluation using good engineering practice (a statement of which is required in § 86.098–23(b)(4)(ii)).

(4) All fuel vapor generated in a gasoline- or methanol-fueled heavy-duty vehicle during in-use operations shall be routed exclusively to the evaporative control system (e.g., either canister or engine purge). The only exception to this requirement shall be for emergencies.

(c) No crankcase emissions shall be discharged into the ambient atmosphere from any new 2008 or later model year Otto-cycle HDE.

(d) Every manufacturer of new motor vehicle engines subject to the standards prescribed in this section shall, prior to taking any of the actions specified in section 203(a)(1) of the Act, test or cause to be tested motor vehicle engines in accordance with applicable procedures in subpart N or P of this part to ascertain that such test engines meet the requirements of this section.

(e) [Reserved]. For guidance see § 86.099–10.

(f) Phase-in options. (1)(i) For model year 2008, manufacturers may certify some of their engine families to the exhaust standards applicable to model year 2007 engines under § 86.005–10, in lieu of the exhaust standards specified in this section. These engines must comply with all other requirements applicable to model year 2008 engines, except as allowed by paragraph (f)(1)(ii) of this section. The combined number of engines in the engine families certified to the 2007 combined NO_X plus NMHC standard may not exceed 50 percent of the manufacturer's U.S.-directed production of heavy-duty Otto-cycle motor vehicle engines for model year 2008, except as explicitly allowed by paragraph (f)(2) of this section.

(ii) For model year 2008, manufacturers may certify some of their engine families to the evaporative standards applicable to model year 2007 engines under § 86.005–10, in lieu of the standards specified in this section.

EXHIBIT J

These engines must comply with all other requirements applicable to model year 2008 engines, except as allowed by paragraph (f)(1)(i) of this section. The combined number of engines in the engine families certified to the 2007 standards may not exceed 50 percent of the manufacturer's U.S.-directed production of heavy-duty Otto-cycle motor vehicle engines for model year 2008.

(2)(i) Manufacturers certifying engines to all of the applicable exhaust standards listed in paragraph (a) of this section prior to model year 2008 (without using credits) may reduce the number of engines that are required to meet the NO_X and NMHC exhaust standards listed in paragraph (a) of this section in model year 2008 and/or 2009, taking into account the phase-in option provided in paragraph (f)(1) of this section. For every engine that is certified early, the manufacturer may reduce the number of engines that are required by paragraph (f)(1) of this section to meet the NO_X and NMHC standards listed in paragraph (a) of this section by one engine. For example, if a manufacturer produces 100 heavy-duty Otto-cycle engines in 2007 that meet all of the applicable standards listed in paragraph (a) of this section, and it produced 10,000 heavy-duty Otto-cycle engines in 2009, then only 9,900 of the engines would need to comply with the NO_X and NMHC standards listed in paragraph (a) of this section.

(ii) Manufacturers certifying engines to all of the applicable evaporative standards listed in paragraph (b) of this section prior to model year 2008 may reduce the number of engines that are required to meet the evaporative standards listed in paragraph (a) of this section in model year 2008 and/or 2009, taking into account the phase-in option provided in paragraph (f)(1) of this section. For every engine that is certified early, the manufacturer may reduce the number of engines that are required by paragraph (f)(1) of this section to meet evaporative standards listed in paragraph (b) of this section by one engine.

(3) Manufacturers certifying engines to a voluntary NO_X standard of 0.10 g/bhp-hr (without using credits) in addition to all of the applicable standards listed in paragraphs (a) and (b) of this section prior to model year 2008 may reduce the number of engines that are required to meet the NO_X and NMHC standards listed in paragraph (a) of this section in model year 2008 and/or 2009, taking into account the phase-in option provided in paragraph (f)(1) of this section. For such every engine that is certified early, the manufacturer may reduce the number of engines that are required by paragraph (f)(1) of this section to meet the NO_X and NMHC standards listed in paragraph (a) of this section by two engines.

(g) For model years prior to 2012, for purposes of determining compliance after title or custody has transferred to the ultimate purchaser, for engines having a NO_X FEL no higher than 0.50 g/bhp-hr, the applicable compliance limits for NO_X and NMHC shall be determined by adding 0.10 g/bhp-hr to the otherwise applicable standards or FELs for NO_X and NMHC.

25. A new § 86.113–07 is added to subpart B to read as follows:

§ 86.113–07 Fuel specifications.

Section 86.113–07 includes text that specifies requirements that differ from § 86.113–94 or § 86.113–04. Where a paragraph in § 86.113–94 or § 86.113–04 is identical and applicable to § 86.113–07, this may be indicated by specifying the corresponding paragraph and the statement ''[Reserved]. For guidance see § 86.113–94.'' or ''[Reserved]. For guidance see § 86.113–04.''.

(a) [Reserved]. For guidance see § 86.113–04.

(b)(1) [Reserved]. For guidance see § 86.113–94.

(b)(2) Petroleum fuel for diesel vehicles meeting the following specifications, or substantially equivalent specifications approved by the Administrator, must be used in exhaust emissions testing. The grade of petroleum diesel fuel recommended by the engine manufacturer, commercially designated as ''Type 2–D'' grade diesel, must be used:

Item		ASTM test method No.	Type 2–D
(i) Cetane Number		D613	40–50
(ii) Cetane Index		D976	40–50
(iii) Distillation range:			
(A) IBP	°F	D86	340–400
	(°C)		(171.1–204.4)
(B) 10 pct. point	°F	D86	400–460
	(°C)		(204.4–237.8)
(C) 50 pct. point	°F	D86	470–540
	(°C)		(243.3–282.2)
(D) 90 pct. point	°F	D86	560–630
	(°C)		(293.3–332.2)
(E) EP	°F	D86	610–690
	(°C)		(321.1–365.6)
(iv) Gravity	°API	D287	32–37
(v) Total sulfur	ppm	D2622	7–15
(vi) Hydrocarbon composition:			
(A) Aromatics, minimum (Remainder shall be paraffins, naphthenes, and olefins)	pct.	D5186	27
(vii) Flashpoint, min.	°F	D93	130
	(°C)		(54.4)
(viii) Viscosity	centistokes	D445	2.0–3.2

(3) Petroleum fuel for diesel vehicles meeting the following specifications, or substantially equivalent specifications approved by the Administrator, shall be used in service accumulation. The grade of petroleum diesel fuel recommended by the engine manufacturer, commercially designated as ''Type 2-D'' grade diesel fuel, shall be used: (b)(4) through (g) [Reserved]. For guidance see § 86.113–94.

Item		ASTM test method No.	Type 2–D
(i) Cetane Number		D613	38–58

EXHIBIT J

Item		ASTM test method No.	Type 2–D
(ii) Cetane Index		D976	min. 40
(iii) Distillation range:			
90 pct. point	°F	D86	540–630
(iv) Gravity	°API	D287	30–39
(v) Total sulfur	ppm	D2622	7–15
(vi) Flashpoint, min.	°F	D93	130
	(°C)		(54.4)
(vii) Viscosity	centistokes	D445	1.5–4.5

(h)(1) For model year 2004 through 2006 Tier 2 diesel-fueled vehicles that incorporate sulfur-sensitive technologies, the manufacturer may test the vehicle using a test fuel meeting the specifications listed in paragraphs (b)(2) and (b)(3) of this section, provided the manufacturer clearly recommends to the ultimate purchaser in the owner's manual that the vehicle should use fuel with no higher than 15 ppm sulfur.

(2) For model year 2004 through 2006 Tier 2 diesel-fueled vehicles that incorporate sulfur-sensitive technologies and that are certified for 50-state sale (*i.e.,* certified to California and EPA standards), the manufacturer may test the vehicle using a test fuel whose qualities, on a specification by specification basis, meet the requirements of either the specifications listed in paragraph (b)(2) of this section or the California test fuel specifications, provided the manufacturer clearly recommends to the ultimate purchaser in the owner's manual that the vehicle should use fuel with no higher than 15 ppm sulfur.

(3) Where a manufacturer uses a test fuel under paragraph (h)(1) or (h)(2) of this section, EPA shall use the same fuel for its compliance testing.

26. A new § 86.1213–04 is added to Subpart M to read as follows:

§ 86.1213–04 Fuel specifications.

The test fuels listed in § 86.1313–04 shall be used for evaporative emission testing.

27. A new § 86.1306–07 is added to subpart N to read as follows:

§ 86.1306–07 Equipment required and specifications; overview.

Section 86.1306–07 includes text that specifies requirements that differ from § 86.1306–96. Where a paragraph in § 86.1306–96 is identical and applicable to § 86.1306–07, this may be indicated by specifying the corresponding paragraph and the statement ''[Reserved]. For guidance see § 86.1306–96.''.

(a) and (b) [Reserved]. For guidance see § 86.1306–96.

(c)(1) Upon request, the Administrator may allow a manufacturer to use some of the test equipment allowed for model year 2006 and earlier engines instead of the test equipment required for model year 2007 and later engines, provided that good engineering judgment indicates that it would not adversely affect determination of compliance with the applicable emission standards of this part.

(2) A manufacturer may use the test equipment required for model year 2007 and later engines for earlier model year engines, provided that good engineering judgment indicates that it would not adversely affect determination of compliance with the applicable emission standards of this part.

(d) Approval of alternate test system. (1) If on the basis of the information described in paragraph (d)(5) of this section, the Administrator determines that an alternate test system would consistently and reliably produce emission test results that are at least equivalent to the results produced using the test systems described in this subpart, he/she shall approve the alternate system for optional use instead of the test systems described in this subpart.

(2) Any person may submit an application for approval of an alternate test system.

(3) In approving an alternate test system, the Administrator may approve it for general use, or may approve it conditionally.

(4) The Administrator may revoke the approval on the basis of new information that indicates that the alternate test system is not equivalent. However, revocation of approval must allow manufacturers sufficient lead-time to change the test system to an approved system. In determining the amount of lead-time that is required, the Administrator will consider relevant factors such as:

(i) The ease with which the test system can be converted to an approved system.

(ii) The degree to which the alternate system affects the measured emission rates.

(iii) Any relevant conditions included in the approval.

(5) The application for approval must include:

(i) *An explanation of the theoretical basis of the alternate system.* This technical description should explain why the detection principle of the alternate system would provide equivalent results to the detection principle of the prescribed system for the full range of emission properties being measured. This description may include equations, figures, and references. For example, a NO_X measurement application should theoretically relate the alternate detection principle to the chemiluminescent detection principle of detecting nitric oxide for a typical range of NO to NO_2 ratios. A PM measurement application should explain the principle(s) by which the alternate system quantifies PM mass independent of PM composition, and how it is impacted by semi-volatile and volatile species= phase distributions. For any proportioning or integrating system, the application should compare the alternate system's theoretical response to the prescribed system's response.

(ii) *A technical description of the alternate system.* This section shall detail all of the hardware and software included in the alternate system. Dimensioned drawings, flow-charts, schematics, and component specifications shall be included. Any data manipulation (*i.e.* calculations) that the system performs shall be presented in this section.

(iii) *A description of the procedures used to operate the system including the level of training that an operator must have to achieve acceptable results.* This section of the application shall describe all of the installation, calibration, operation, and maintenance procedures in a step-by-step format. Note that empirical calibration with respect to another prescribed or approved measurement system is not acceptable. Calibration should be performed with NIST traceable standards, or equivalent national standards. Diagrams, schematics, and other graphics may be used to enhance the description.

EXHIBIT J

(iv) *A comparison of results from the alternate system and from the prescribed system (or other system approved by the Administrator).* The two systems must be calibrated independently to NIST traceable standards or equivalent national standards for this comparison. While other statistical analyses may be acceptable, it is recommended that the comparison be based on a minimum of 7 collocated and simultaneous tests. This comparison shall be performed over the ''hot-start'' portion of the FTP test cycle. If the comparison is paired, it must demonstrate that the alternate system passes a two-sided, paired t-test described in this paragraph. If the test is unpaired, it must demonstrate that the alternate system passes a two-sided, unpaired t-test described in this paragraph. Other statistical criteria may be set by the Administrator. The average of these tests for the reference system must return results less than or equal to the applicable emissions standard. The t-test is performed as follows, where ''n'' equals the number of tests:

(A) Calculate the average of the alternate system results; this is A_{avg}.

(B) Calculate the average of the results of the system to which the alternate system was referenced; this is R_{avg}.

(C) For an unpaired comparison, calculate the ''n − 1'' standard deviation for the alternate and reference averages; these are A_{sd} and R_{sd} respectively. A_{sd} must be less than or equal to R_{sd}. If A_{sd} is greater than R_{sd}, the Administrator will not approve the application.

(D) For an unpaired comparison, calculate the t-value:

$$t_{unpaired} = (A_{avg} - R_{avg})/((A_{sd}^2 + R_{sd}^2)/n)^{1/2}$$

(E) For a paired comparison, calculate the ''n − 1'' standard deviation (squared) of the differences, d_i, between the paired results, where ''i'' represents the ith test of n number of tests:

$$S_D^2 = (Sd_i^2 - ((Sd_i)^2/n))/(n-1)$$

(F)(*1*) For a paired comparison, calculate the t-value:

$$t_{paired} = (A_{avg} - R_{avg})/(S_D^2/n)^{1/2}$$

(*2*) The absolute value of t must be less than the critical t value, t_{crit} at a 90% confidence interval for ''n − 1'' degrees of freedom. The following table lists 90% confidence interval t_{crit} values for n − 1 degrees of freedom:

90% Confidence interval critical t values vs. n − 1 degrees of freedom for a two-sided, paired t − test

n − 1	t_{crit}
6	1.94
7	1.89
8	1.86
9	1.83
10	1.81
11	1.80
12	1.78
13	1.77
14	1.76
15	1.75
16	1.75
17	1.74
18	1.73
19	1.73
20	1.72

28. Section 86.1309–90 is amended by revising the section heading and paragraph (a)(1) to read as follows:

§ 86.1309–90 Exhaust gas sampling system; Otto-cycle and non-petroleum-fueled engines.

(a)(1) *General.* The exhaust gas sampling system described in this paragraph is designed to measure the true mass of gaseous emissions in the exhaust of either gasoline-fueled, natural gas-fueled, liquefied petroleum gas-fueled or methanol-fueled engines. In the CVS concept of measuring mass emissions, two conditions must be satisfied; the total volume of the mixture of exhaust and dilution air must be measured, and a continuously proportioned volume of sample must be collected for analysis. Mass emissions are determined from the sample concentration and total flow over the test period.

* * * * *

29. A new section 86.1310–07 is added to Subpart N to read as follows:

§ 86.1310–2007 Exhaust gas sampling and analytical system for gaseous emissions from heavy-duty diesel-fueled engines and particulate emissions from all engines.

(a) *General.* The exhaust gas sampling system described in this paragraph is designed to measure the true mass of both gaseous and particulate emissions in the exhaust of heavy-duty diesel engines, and particulate emissions in the exhaust of all heavy-duty engines. (Gaseous emissions from non-petroleum-fueled diesel engines are measured using the system described in § 86.1309.) This system utilizes the CVS concept (described in § 86.1309) of measuring the combined mass emissions of THC, NO_X, CH_4 (if applicable) CO, CO_2 and particulate matter. For all emission measurement systems described in this section, multiple or redundant systems may be used during a single test. Statistical averages of data from multiple systems may be used to calculate test results, consistent with good engineering judgment. Weighted averages are allowed, where appropriate Statistical outliers may be discarded, but all results must be reported. If the Administrator determines that the statistical analysis is not consistent with good engineering judgment, he/she may determine compliance from the arithmetic mean of the results. A continuously integrated system may be used for THC, NO_X , CO and CO_2 measurement. The use of proportional bag sampling for sample integration is allowed for THC, NO_X, CO, and CO_2 measurement, but requirements specific to bag sampling from diesel exhaust must be met for the THC and NO_X emissions measurements. CH_4 measurement for calculation of NMHC (if applicable) is measured using GC–FID analysis of a proportional bag sample. The mass of gaseous emissions is determined from the sample concentration and total flow over the test period. The mass of particulate emissions is determined from a proportional mass sample collected on a filter and from the sample flow and total flow over the test period. As an option, the measurement of total fuel mass consumed over a cycle may be substituted for the exhaust measurement of CO_2. General requirements are as follows:

(1) This sampling system requires the use of a CVS The CVS system may use a PDP or a CFV. PDP systems must use a heat exchanger. CFV systems may use either a heat exchanger or electronic flow compensation. When electronic flow compensation is used, the CFV may be replaced by a subsonic venturi (SSV) as long as the CVS concept as defined in § 86.1309 is maintained (i.e., a constant volumetric flow-rate through the CVS is maintained for the duration of the test). Figure N07–1 is a schematic drawing of the CVS system.

(2) The THC analytical system for diesel engines requires a heated flame ionization detector (HFID) and heated sample system (191 ± 11 °C) using either:

(i) Continuously integrated measurement of diluted THC meeting the minimum requirements and technical specifications contained in paragraph (b)(3) of this section. Unless compensation for varying mass flow is made, a constant mass flow system must be used to ensure a proportional sample; or

(ii) Heated (191 ± 11 °C) proportional bag sampling systems for hydrocarbon measurement will be allowed if the bag sampling system meets the performance specifications for outgassing and permeability as defined in paragraph (b)(2) of this section.

EXHIBIT J

(3) CH_4 measurement, if applicable, shall be conducted using a proportional bag sampling system with subsequent analysis using a gas chromatograph and FID. The CH_4 measurement shall be done in accordance with SAE Recommended Practice J1151, ''Methane Measurement Using Gas Chromatography'' (1994 SAE Handbook, Volume 1: Materials, Fuels, Emissions, and Noise, Section 13, Page 13.170), which is incorporated by reference pursuant to § 86.1(b)(2). As an alternative, the manufacturer may choose one of the options set forth in § 86.004–28(c)(8).

(4) [Reserved]

(5) [Reserved]

(6) The CO and CO_2 analytical system requires:

(i) Bag sampling (§ 86.1309) and analytical (§ 86.1311) capabilities, as shown in Figure N07–1; or

(ii) Continuously integrated measurement of diluted CO and CO_2 meeting the minimum requirements and technical specifications contained in paragraph (b)(5) of this section. Unless compensation for varying flow is made, a constant flow system must be used to ensure a proportional sample; and

(7) The NO_X analytical system requires:

(i) Continuously integrated measurement of diluted NO_X meeting the minimum requirements and technical specifications contained in paragraph (b)(5) of this section. Unless compensation for varying flow is made, a constant flow system must be used to ensure a proportional sample.

(ii) Bag sampling (§ 86.1309) and analytical (§ 86.1311) capabilities, as shown in Figure N07–1 (or Figure 07–2) will be allowed provided that sample gas temperature is maintained above the sample's aqueous dewpoint at all times during collection and analysis.

(8) The mass of particulate in the exhaust is determined via filtration. The particulate sampling system requires dilution of the exhaust to a temperature of 47 °C ± 5 °C, measured upstream of a single high-efficiency sample filter (as close to the filter as practical).

(9) Since various configurations can produce equivalent results, exact conformance with these drawings is not required. Additional components such as instruments, valves, solenoids, pumps, and switches may be used to provide additional information and coordinate the functions of the components of the system. Other components, such as snubbers, which are not needed to maintain accuracy on some systems, may be excluded if their exclusion is based upon good engineering judgment.

(10) Other sampling and/or analytical systems may be used if shown to yield equivalent results and if approved in advance by the Administrator (see § 86.1306–07).

(b) *Component description.* The components necessary for exhaust sampling shall meet the following requirements:

(1) *Exhaust dilution system.* The CVS shall conform to all of the requirements listed for the exhaust gas CVS systems in § 86.1309(b), (c), and (d). With respect to PM measurement, the intent of this measurement procedure is to perform the sample cooling primarily via dilution and mixing with air rather than via heat transfer to the surfaces of the sampling system. In addition the CVS must conform to the following requirements:

(i) The flow capacity of the CVS must be sufficient to maintain the diluted exhaust stream at the temperatures required for the measurement of particulate and hydrocarbon emission noted below and at, or above, the temperatures where aqueous condensation in the exhaust gases could occur. This is achieved by the following method. The flow capacity of the CVS must be sufficient to maintain the diluted exhaust stream in the primary dilution tunnel at a temperature of 191 °C or less at the sampling zone and as required to prevent condensation at any point in the dilution tunnel. Gaseous emission samples may be taken directly from this sampling point. An exhaust sample must then be taken at this point to be diluted a second time for use in determining particulate emissions. The secondary dilution system must provide sufficient secondary dilution air to maintain the double-diluted exhaust stream at a temperature of 47 C ± 5 C, measured at a point located between the filter face and 16 cm upstream of the filter face.

(ii) For the CVS , either a heat exchanger (*i.e.* CFV–CVS) or electronic flow compensation (*i.e.* EFC–CFV–CVS), which also includes the particulate sample flows is required Refer to Figure N07–1.

(iii) When a heat exchanger is used, the gas mixture temperature, measured at a point immediately ahead of the critical flow venturi, shall be within ±11 °C of the average operating temperature observed during the test with the simultaneous requirement that aqueous condensation does not occur. The temperature measuring system (sensors and readout) shall have an accuracy and precision of ±1.9 °C. For systems utilizing a flow compensator to maintain proportional sampling, the requirement for maintaining constant temperature is not necessary.

(iv) The primary dilution air and secondary dilution air:

(A) Shall have a primary and secondary dilution air temperature equal to or greater than 15 °C.

(B) Primary dilution air shall be filtered at the dilution air inlet. The manufacturer of the primary dilution air filter shall state that the filter design has successfully achieved a minimum particle removal efficiency of 98% (less than 0.02 penetration) as determined using ASTM test method F 1471–93 (incorporated by reference at section 86.1). Secondary dilution air shall be filtered at the dilution air inlet using a high-efficiency particulate air filter (HEPA). The HEPA filter manufacturer shall state the HEPA filter design has successfully achieved a minimum particle removal efficiency of 99.97% (less than 0.0003 penetration) as determined using ASTM test method F 1471–93. It is recommended that the primary dilution air be filtered using a HEPA filter. EPA intends to utilize HEPA filters to condition primary dilution air in its test facilities. It is acceptable to use of a booster blower upstream or downstream of a HEPA filter in the primary dilution tunnel (and upstream of the introduction of engine exhaust into the CVS) to compensate for the additional pressure loss associated with the filter. The design of any booster blower located downstream of the filter should minimize the introduction of additional particulate matter into the CVS.

(C) Primary dilution air may be sampled to determine background particulate levels, which can then be subtracted from the values measured in the diluted exhaust stream. In the case of primary dilution air, the background particulate filter sample shall be taken immediately downstream of the dilution air filter and upstream of the engine exhaust flow (Figure N07–1). The provisions of paragraphs (b)(7) of this section, and of § 86.1312–2007 also apply to the measurement of background particulate matter, except that the filter temperature must be maintained below 52 °C.

(2) *Heated proportional bag sampling systems.* If a heated (191 ± 11 °C) proportional bag sampling system is used for THC measurement, sample bags must demonstrate minimal outgassing and permeability by passing the following performance test:

(i) Performance test for sample bag HC outgassing and CO_2 permeability. Bring the bag system to its operational temperature. Fill the heated sample bag with a nominal mixture of 1% CO_2 in

EXHIBIT J

N_2. Perform an initial measurement of CO_2 and THC from the sample bag, and repeat the measurement after one hour. Acceptable performance criteria are <2% decrease of the initial CO_2 reading and <1 ppmC THC.

(ii) [Reserved]

(3) *Continuous HC measurement system.* (i) The continuous HC sample system (as shown in Figure N07–1) uses an ''overflow'' zero and span system. In this type of system, excess zero or span gas spills out of the probe when zero and span checks of the analyzer are made. The ''overflow'' system may also be used to calibrate the HC analyzer per § 86.1321(b), although this is not required.

(ii) No other analyzers may draw a sample from the continuous HC sample probe, line or system, unless a common sample pump is used for all analyzers and the sample line system design reflects good engineering practice.

(iii) The overflow gas flow rates into the sample line shall be at least 105% of the sample system flow rate.

(iv) The overflow gases shall enter the heated sample line as close as practicable to the outside surface of the CVS duct or dilution tunnel.

(v) The continuous HC sampling system shall consist of a probe (which must raise the sample to the specified temperature) and, where used, a sample transfer system (which must maintain the specified temperature). The continuous hydrocarbon sampling system (exclusive of the probe) shall:

(A) Maintain a wall temperature of 191°C ± 11°C as measured at every separately controlled heated component (*i.e.*, filters, heated line sections), using permanent thermocouples located at each of the separate components.

(B) Have a wall temperature of 191°C ± 11°C over its entire length. The temperature of the system shall be demonstrated by profiling the thermal characteristics of the system at initial installation and after any major maintenance performed on the system. The temperature profile of the HC sampling system shall be demonstrated by inserting thermocouple wires (typically Teflon™ coated for ease of insertion) into the sampling system assembled in-situ where possible, using good engineering judgment. The wire should be inserted up to the HFID inlet. Stabilize the sampling system heaters at normal operating temperatures. Withdraw the wires in increments of 5 cm to 10 cm (2 inches to 4 inches) including all fittings. Record the stabilized temperature at each position. The system temperature will be monitored during testing at the locations and temperature described in § 86.1310–90(b)(3)(v)(A).

Note: It is understood that profiling of the sample line can be done under flowing conditions also as required with the probe. This test may be cumbersome if test facilities utilize long transfer lines and many fittings; therefore it is recommended that transfer lines be kept as short as possible and the use of fittings should be kept minimal.

(C) Maintain a gas temperature of 191°C ±11°C immediately before the heated filter and HFID. These gas temperatures will be determined by a temperature sensor located immediately upstream of each component.

(vi) The continuous hydrocarbon sampling probe shall:

(A) Be defined as the first 25.4 cm (10 in) to 76.2 cm (30 in) of the continuous hydrocarbon sampling system;

(B) Have a 0.483 cm (0.19 in) minimum inside diameter;

(C) Be installed in the primary dilution tunnel at a point where the dilution air and exhaust are well mixed (*i.e.*, approximately 10 tunnel diameters downstream of the point where the exhaust enters the dilution tunnel);

(D) Be sufficiently distant (radially) from other probes and the tunnel wall so as to be free from the influence of any wakes or eddies; and

(E) Increase the gas stream temperature to 191°C ± 11°C by the exit of the probe. The ability of the probe to accomplish this shall be demonstrated at typical sample flow rates using the insertion thermocouple technique at initial installation and after any major maintenance. Compliance with the temperature specification shall be demonstrated by monitoring during each test the temperature of either the gas stream or the wall of the sample probe at its terminus.

(vii) The response time of the continuous measurement system shall be no greater than:

(A) 1.5 seconds from an instantaneous step change at the port entrance to the analyzer to within 90 percent of the step change;

(B) 10 seconds from an instantaneous step change at the entrance to the sample probe or overflow span gas port to within 90 percent of the step change. Analysis system response time shall be coordinated with CVS flow fluctuations and sampling time/test cycle offsets if necessary; and

(C) For the purpose of verification of response times, the step change shall be at least 60 percent of full-scale chart deflection.

(4) *Primary-dilution tunnel.* (i) The primary dilution tunnel shall be:

(A) Small enough in diameter to cause turbulent flow (Reynolds Number greater than 4000) and of sufficient length to cause complete mixing of the exhaust and dilution air. Good engineering judgment shall dictate the use of mixing plates and mixing orifices to ensure a well-mixed sample. To verify mixing, EPA recommends flowing a tracer gas (*i.e.* propane or CO_2) from the raw exhaust inlet of the dilution tunnel and measuring its concentration at several points along the axial plane at the sample probe. Tracer gas concentrations should remain nearly constant (*i.e.* within 2%) between all of these points.

(B) At least 8 inches (20 cm) in diameter.

(C) Constructed of electrically conductive material which does not react with the exhaust components.

(D) Electrically grounded.

(E) EPA recommends that the tunnel should have minimal thermal capacitance such that the temperature of the walls tracks with the temperature of the diluted exhaust.

(ii) The temperature of the diluted exhaust stream inside of the primary dilution tunnel shall be sufficient to prevent water condensation.

(iii) The engine exhaust shall be directed downstream at the point where it is introduced into the primary dilution tunnel.

(5) *Continuously integrated NO_X, CO, and CO2 measurement systems.* (i) The sample probe shall:

(A) Be in the same plane as the continuous HC probe, but shall be sufficiently distant (radially) from other probes and the tunnel wall so as to be free from the influences of any wakes or eddies; and

(B) Heated and insulated over the entire length, to prevent water condensation, to a minimum temperature of 131°F (55° C). Sample gas temperature immediately before the first filter in the system shall be at least 131° F (55° C).

(ii) The continuous NO_X, CO, or CO2 sampling and analysis system shall conform to the specifications of subpart D of this part, with the following exceptions:

(A) The system components required to be heated by subpart D need only be heated to prevent water condensation, the minimum component temperature shall be 131° F (55° C);

(B) The system response defined in § 86.329–79 shall be no greater than 10 seconds. Analysis system response time shall be coordinated with CVS flow fluctuations and sampling time/test cycle offsets, if necessary;

(C) Alternative NO_X measurement techniques outlined in § 86.346–79 are

EXHIBIT J

not permitted for NO_X measurement in this subpart;

(D) All analytical gases shall conform to the specifications of § 86.1314;

(E) Any range on a linear analyzer below 100 ppm shall have and use a calibration curve conforming to § 86. 1323–07; and

(F) The measurement accuracy requirements are specified in § 86. 1338–07 .

(iii) The signal output of analyzers with non-linear calibration curves shall be converted to concentration values by the calibration curve(s) specified in subpart D of this part (§ 86.330–79) before flow correction (if used) and subsequent integration takes place.

(6) *Particulate sampling system.* This method collects a proportional sample from the primary tunnel, and then transfers this sample to a secondary dilution tunnel where the sample is further diluted. The double-diluted sample is then passed through the collection filter. Proportionality (i.e., mass flow ratio) between the primary tunnel flow rate and the sample flow rate must be maintained within ±5%, excluding the first 10 seconds of the test at start-up. The requirements for this system are:

(i) The particulate sample transfer tube shall be configured and installed so that:

(A) The inlet faces upstream in the primary dilution tunnel at a point where the primary dilution air and exhaust are well mixed.

(B) The particulate sample exits on the centerline of the secondary tunnel.

(ii) The entire particulate sample transfer tube shall be:

(A) Sufficiently distant (radially) from other sampling probes (in the primary dilution tunnel) so as to be free from the influence of any wakes or eddies produced by the other probes.

(B) 0.85 cm minimum inside diameter.

(C) No longer than 36 in (91 cm) from inlet plane to exit plane.

(D) Designed to minimize the diffusional and thermophoretic deposition of particulate matter during transfer (i.e., sample residence time in the transfer tube should be as short as possible, temperature gradients between the flow stream and the transfer tube wall should be minimized). Double-wall, thin-wall, air-gap insulated, or a controlled heated construction for the transfer tube is recommended.

(E) Constructed such that the surfaces exposed to the sample shall be an electrically conductive material, which does not react with the exhaust components, and this surface shall be electrically grounded so as to minimize electrostatic particulate matter deposition.

(iii) The secondary dilution air shall be at a temperature equal to or greater than 15° C.

(iv) The secondary-dilution tunnel shall be constructed such that the surfaces exposed to the sample shall be an electrically conductive material, which does not react with the exhaust components, and this surface shall be electrically grounded so as to minimize electrostatic particulate deposition.

(v) Additional dilution air must be provided so as to maintain a sample temperature of 47° C ± 5° C upstream of the sample filter. Temperature shall be measured with a thermocouple with a 3/16″ shank, having thermocouple wires with a gage diameter 24 AWG or smaller, a bare-wire butt-welded junction; or other suitable temperature measurement with an equivalent or faster time constant and an accuracy and precision of ± 1.9° C.

(vi) The filter holder assembly shall be located within 12.0 in (30.5 cm) of the exit of the secondary dilution tunnel.

(vii) The face velocity through the sample filter shall not exceed 100 cm/s (face velocity is defined as the standard volumetric sample flow rate (i.e., scm3/sec) divided by the sample filter stain area (i.e., cm2)).

(7) *Particulate sampling.* (i) *Filter specifications.* (A) Polytetrafluoroethylene (PTFE or Teflon™) coated borosilicate glass fiber high-efficiency filters or polytetrafluoroethylene (PTFE or Teflon™) high-efficiency membrane filters with an integral support ring of polymethylpentene (PMP) or equivalent inert material are required. Filters shall have a minimum clean filter efficiency of 99% as measured by the ASTM D2986–95a DOP test (incorporated by reference at § 86.1).

(B) Particulate filters must have a diameter of 46.50 ± 0.6 mm (38 mm minimum stain diameter).

(C) The dilute exhaust is simultaneously sampled by a single high-efficiency filter during the cold-start test and by a second high efficiency filter during the hot-start test.

(D) It is recommended that the filter loading should be maximized consistent with temperature requirements.

(ii) *Filter holder assembly.* The filter holder assembly shall comply with the specifications set forth for ambient PM measurement in 40 CFR Part 50, Appendix L 7.3.5, figures L–25 and L–26, with the following exceptions:

(A) The material shall be 302, 303, or 304 stainless steel instead of anodized aluminum.

(B) The 2.84 cm diameter entrance to the filter holder may be adapted, using sound engineering judgment and leak-free construction, to an inside diameter no smaller than 0.85 cm, maintaining the 12.5° angle from the inlet of the top filter holder to the area near the sealing surface of the top of the filter cartridge assembly. Figure N07–2 shows acceptable variation from the design in 40 CFR Part 50, Appendix L. Similar variations using sound engineering design are also acceptable provided that they provide even flow distribution across the filter media and a similar leak-free seal with the filter cartridge assembly.

(C) If additional or multiple filter cartridges are stored in a particulate sampler as part of an automatic sequential sampling capability, all such filter cartridges, unless they are installed in the sample flow (with or without flow established) shall be covered or sealed to prevent communication of semi-volatile matter from filter to filter; contamination of the filters before and after sampling; or loss of volatile or semi-volatile particulate matter after sampling.

(iii) *Filter cartridge assembly.* The filter cartridge assembly shall comply with the specifications set forth for ambient PM measurement in 40 CFR Part 50, Appendix L 7.3.5, figures L–27, L–28, and L–29, with the following exceptions:

(A) In addition to the specified Delrin™ material, 302, 303, or 304 stainless steel, polycarbonate or acrylonitrile/butadiene/styrene (ABS) resin, or a combination of these materials may also be used.

(B) A bevel introduced on the inside diameter of the entrance to the filter cartridge, as used by some commercially available automated sequential particulate filter cartridge changers, is also acceptable (see Figure N07–3).

(iv) *Particle preclassifier.* A particle preclassifier shall be installed immediately upstream of the filter holder assembly (N07–1). The purpose of the preclassifier is to remove coarse, mechanically generated particles (e.g., rust from the engine exhaust system or carbon sheared from the sampling system walls) from the sample flow stream while allowing combustion-generated particles to pass through to the filter. The preclassifier may be either an inertial impactor or a cyclonic separator. The preclassifier manufacturer 50% cutpoint particle diameter shall be between 2.5 μm and 10 μm at the volumetric flow rate selected for sampling of particulate matter emissions. Sharpness of cut is not specifically defined, but the

EXHIBIT J

preclassifier geometry shall allow at least 99% of the mass concentration of 1 μm particles to pass through the exit of the preclassifier to the filter at the volumetric flow rate selected for sampling particulate matter emissions. Periodic servicing of the preclassifier will be necessary to prevent a buildup of mechanically separated particles. The particle preclassifier may be made integral with the top of the filter holder assembly. The preclassifier may also be made integral with a mixing-tee for introduction of secondary dilution air, thus replacing the secondary dilution tunnel; provided that the preclassifier provides sufficient mixing.

BILLING CODE 6560–50–P

EXHIBIT J

Figures to § 86.1310-2007

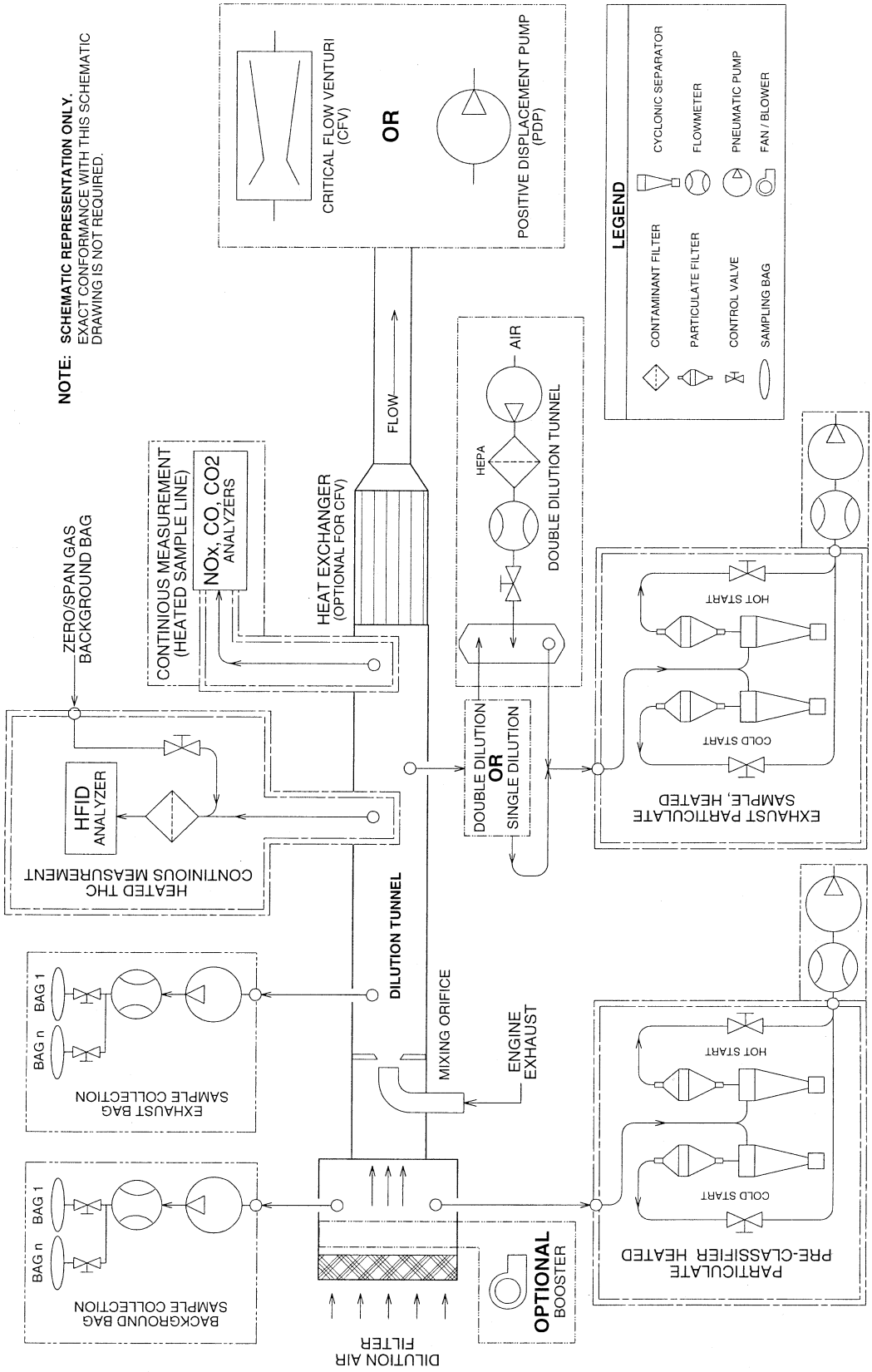

N07-1 GASEOUS AND PARTICULATE EMISSIONS SAMPLING SYSTEM (PDP - CFV CONSTANT VOLUME SAMPLER)

EXHIBIT J

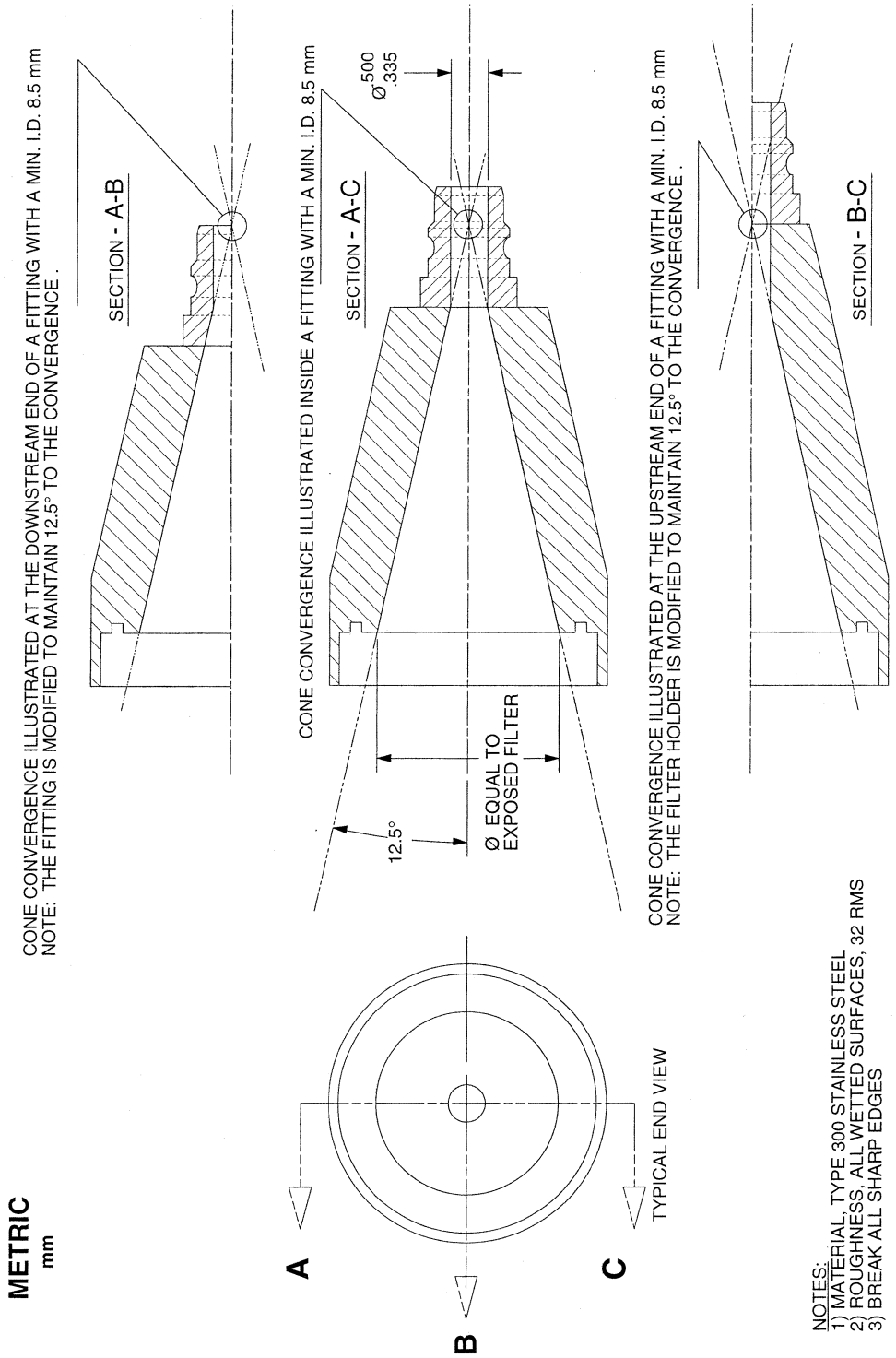

N07-2 FILTER HOLDER GEOMETRY

EXHIBIT J

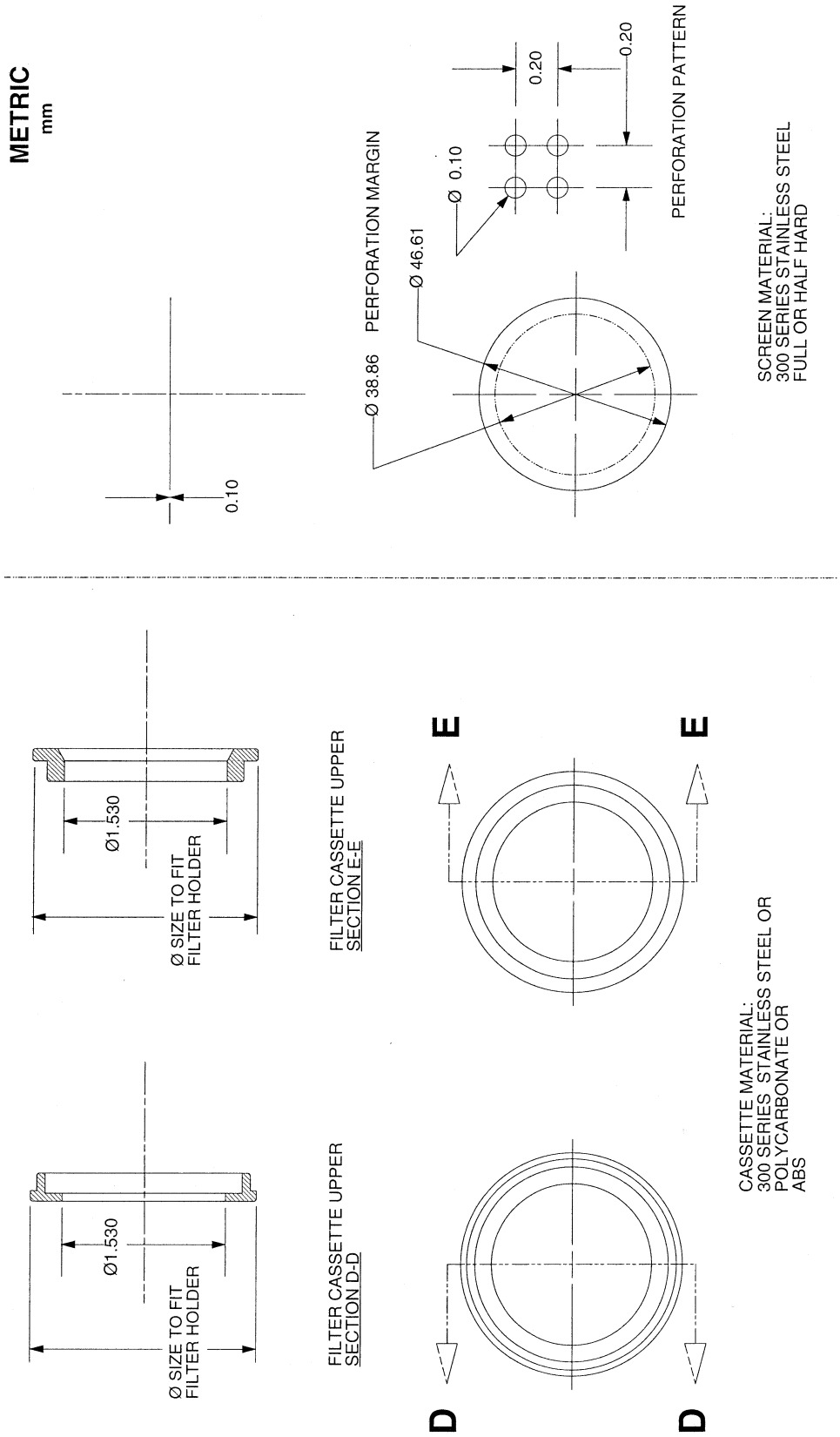

N07-3 FILTER CASSETTE AND SCREEN

BILLING CODE 6560–50–C

EXHIBIT J

30. A new section 86.1312–2007 is added to Subpart N to read as follows:

§ 86.1312–2007 Filter stabilization and microbalance workstation environmental conditions, microbalance specifications, and particulate matter filter handling and weighing procedures.

(a) *Ambient conditions for filter stabilization and weighing.*—(1) *Temperature and humidity.* (i) The filter stabilization environment shall be maintained at 22 °C ± 3 °C and a dewpoint of 9.5 °C ± 1 °C. Dewpoint shall be measured with an instrument that exhibits an accuracy of at least ±0.25 °C NIST traceable as stated by the instrument manufacturer. Temperature shall be measured with an instrument that exhibits an accuracy of at least ±0.2°C or better.

(ii) The immediate microbalance workstation environment shall be maintained at 22 °C ± 1 °C and a dewpoint of 9.5 °C ± 1 °C. If the microbalance workstation environment freely circulates with the filter stabilization environment, and this entire environment meets 22 °C ± 1 °C and a dewpoint of 9.5 °C ± 1 °C , then there is no requirement to measure temperature and dewpoint at the microbalance separate from the filter stabilization location. Otherwise, temperature at the microbalance workstation shall be measured with an instrument that exhibits an accuracy of at least ±0.2°C or better, and dewpoint shall be measured with an instrument that exhibits an accuracy of at least ±0.25 °C NIST traceable as stated by the instrument manufacturer.

(2) *Cleanliness.* (i) The microbalance and filter stabilization environments shall be free of ambient contaminants (such as dust or other aerosols) that could settle on the particulate filters. It is recommended that these environments be built to conform with the Class 1000 specification (or cleaner) as determined by Federal Standard 209D or 209E for clean room classification (Available from the Institute of Environmental Standards and Technology website at *www.iest.org* or phone (847) 255–1561). An alternative recommendation would be to equilibrate and/or weigh the filters within a separate, smaller, particle-free, temperature and humidity-controlled chamber (*i.e.,* ''glove box'').

(ii) Reference filters shall be used to monitor for gross particle contamination. It is required that at least two unused reference filters remain in the filter stabilization environment at all times in partially covered glass petri dishes, as in paragraph (c) (1) of this section. These reference filters shall be placed in the filter stabilization environment. The reference filters shall be weighed within 2 hours of, but preferably at the same time as, the sample filters. The reference filters shall be changed at least once a month, but never while any sample filters are between their tare weight (pre-sampling) and gross weight (post-sampling) measurements. The reference filters shall be the same size and material as the sample filters.

(3) *Quality control of ambient conditions.* (i) If, before the start of a weighing session, the temperature or dewpoint of the filter stabilization environment are not within specifications, then filters must remain in the environment for at least 30 minutes after conditions are corrected. If the filter stabilization environment changes during a weighing session such that the specifications are no longer met, the weighing session shall be suspended until the environment has returned to within specifications for at least 30 minutes. Once the environment has returned to within specifications for at least 30 minutes, the reference filters shall be reweighed and the criteria in paragraph (a)(3)(ii) of this section shall apply. Note that temperature and dewpoint shall be sampled once per second, and an unweighted 5-minute moving average of this data shall be calculated once per second. This moving average shall be used to determine the environment temperature and dewpoint for the purpose of determining whether or not the environment is within specifications.

(ii) If the average change in weight of the reference filters is more than 10 micrograms (after correcting for buoyancy as described in paragraph (c)(3) of this section), then all filters in the process of stabilization shall be discarded and all data collected with respect to the discarded filters shall be considered void. Note that more than 2 reference filters may be used to achieve a more robust average of the change in weight of the reference filters.

(b) *Microbalance specifications.* The microbalance used to determine the weights of all filters shall have a precision (standard deviation) of at least ±0.25 micrograms or better for repeated weighing of a calibration weight, a precision of at least ±2.5 micrograms or better for repeated weighing of a clean filter, and a readability equal to or less than 0.1 micrograms. It is recommended that the microbalance be installed on a vibration isolation platform to isolate the microbalance's load cell from external vibration. It is also recommended that the microbalance should be shielded from convective airflow by means of an electrically grounded static dissipative draft shield. Microbalance manufacturer specifications for all preventive maintenance, periodic certification, calibration, and re-zeroing shall be followed. All certification and calibration procedures shall be NIST traceable, or traceable to an equivalent national standard.

(c) *Particulate matter filter handling and weighing.* Care should be taken to prevent contamination of the sample filters and to prevent a buildup of static charge on the filters that could interfere with filter weighing. Static neutralizers, such as Po-210 sources, shall be used to neutralize charge on a filter prior to each weighing. A static neutralizer should be replaced at the interval recommended by its manufacturer, or when it is no longer able to reduce static charge on a filter to less than ±2 VDC as measured with an electrostatic monitor at the microbalance workstation. The person weighing filters shall be grounded with respect to the microbalance to prevent imparting a static charge on the filters. This can be accomplished safely by using a grounding strap such as the wrist straps that are commonly used in the microelectronics industry, or by connecting a similar grounding strap to the tweezers. To prevent electrical shock, a 1-megohm resistor should be installed in series between the person weighing filters and ground.

(1) Within the filter stabilization environment, a pair of clean and electrically conductive tweezers shall be used to place a filter in the lower half of a filter cassette and the cassette shall be placed in a partially open glass petri dish. The petri dish lid should extend over the filter to prevent gross contamination, but it should be left slightly open on one edge to permit stabilization with the environment for at least 30 minutes.

(2) After at least 30 minutes of stabilization, each filter shall be weighed using the specified microbalance. The process of weighing a filter may be repeated and a statistical mean weight of a single filter may be calculated. Sound engineering judgment shall dictate the use of statistics to discard outliers and the weighting of averages. For a clean filter its single weight or statistical mean weight shall be considered the uncorrected tare weight of the filter.

(3) All filter weights shall be corrected for filter buoyancy in air. For the uncorrected tare weight of a filter, this calculated value is the corrected tare weight of the filter, and it must be recorded (see § 86.1344(e)(18)).

EXHIBIT J

Barometric pressure of the microbalance environment shall be measured with an instrument that exhibits ±0.01% full-scale accuracy and 0.01% per-year full scale stability, and the full-scale value used for such a specification shall not exceed 200 kPa.

(i) Buoyancy correction calculation. (A) Calculate vapor pressure of liquid water using the dewpoint temperature in the Magnus formula:

$P_w = 0.6113 \times 10\wedge ((7.5 \times T_{dp})/(237.3 + T_{dp}))$

Where:

P_w=vapor pressure of liquid water, kPa.
T_{dp}=dewpoint temperature, °C.

(B) Calculate air density using the ideal gas relationship and molecular weights of standard air and water:

$A=(3.484 \times P - 1.317 \times P_w)/(T+273.15)$

Where:

A=air density, kg/m³.
P=barometric pressure, kPa.
P_w=vapor pressure of liquid water, kPa.
T=temperature, °C.

(C) Buoyancy correction:

$M=R \times (1-(A/\rho_w))/(1-(A/\rho_s))$.

Where:

M=corrected mass in units of the balance display.
R=uncorrected filter weight in units of the balance display.
A=calculated air density, kg/m³.
ρ_w=density of calibration weight used to calibrate the balance, kg/m³.
ρ_s=density of filter material used to sample PM emissions, kg/m³.

(ii) For determining ρ_s note that PTFE (Teflon™) and borosilicate glass both have densities in the range of 2,200 to 2,400 kg/m³. Therefore, for PTFE-coated borosilicate glass fiber filters, an acceptable ρ_s is 2,300 kg/m³. Note also that polymethylpentene has a density of 850 kg/m³. Because Teflon PTFE membrane filters have an integral polymethylpentene support ring that accounts for 95% of the filter mass, an acceptable ρ_s for these filters is 920 kg/m³. Other ρ_s values for other filters may be obtained similarly. Information about ''ρ_s should be available from the calibration weight manufacturer.

(iii) This paragraph (c)(3)(iii) shows an example of the buoyancy correction. This example assumes the following inputs: Barometric pressure (P)=101.325 kPa, temperature (T)=22.0 °C, dewpoint temperature (T_{dp})=9.5 °C, balance display (R)=100.0000 mg, calibration weight density (ρ_w)=8,000 kg/m³, and filter material density (ρ_s)=2,300 kg/m³. Then:

(A) The water vapor pressure (P_w) is calculated as:

$P_w = 0.6113 \times 10\ ((7.5 \times 9.5)/(237.3 + 9.5)) = 1.186$ kPa.

(B) The air density (A) is calculated as:

$A = (3.484 \times 101.325 - 1.317 \times 1.186)/(22.0 + 273.15) = 1.191$ kg/m³.

(C) The corrected mass (M) is calculated as:

$M=100.0000 \times (1 - (1.191/8000))/(1 - (1.191/2300)) = 100.0369$ mg.

(4) The uncorrected weight, corrected weight, barometric pressure, temperature and humidity, of the filter shall be recorded. Afterward the filter shall be returned to the lower half of the filter cassette, and the upper half of the cassette shall be set in place. The cassette-with filter-shall then be stored in a covered glass petri dish or a sealed (*i.e.,* ends plugged) filter holder assembly, either of which shall remain in the filter stabilization environment until needed for testing. It is recommended that the filter be transported between the filter stabilization environment and the location of the emissions test within a sealed filter holder assembly.

(5) After the emissions test, the filter cassette shall be removed from the filter holder assembly. If this removal is performed in the filter stabilization environment, the upper half of the cassette shall be removed using a properly designed separator tool, the lower half of the cassette-with filter-shall be placed in a partially covered petri dish, and allowed to stabilize for at least 30 minutes. Otherwise, the cassette and filter shall be placed in a closed petri dish until it can be returned to the filter stabilization environment. Once the closed petri dish is returned to the filter stabilization environment, the petri dish shall be opened, the upper half of the cassette shall be removed using a properly designed separator tool, the lower half of the cassette-with filter-shall be placed in a partially covered petri dish, and allowed to stabilize for at least one hour.

(6) After at least 30 minutes, but no more than 60 hours of stabilization, each filter may be weighed using the specified microbalance. The process of weighing a filter may be repeated and a statistical mean may be calculated. Sound engineering judgment shall dictate the use of statistics to discard outliers and the weighting of averages. For a used filter, its single weight or statistical mean weight shall be identified as the uncorrected gross weight of the filter. The uncorrected gross weight shall be corrected for filter buoyancy using the procedure in (c)(3) of this section. The uncorrected gross filter weight, corrected gross filter weight, barometric pressure, temperature, and dewpoint shall be recorded.

(7) The net particulate matter weight (Pf) of each filter shall be equal to the corrected gross filter weight minus the corrected tare filter weight.

(8) Should the particulate matter on the filters contact the petri dish, tweezers, microbalance or any other surface, the data with respect to that filter is void.

31. A new § 86.1313–2004 is added to subpart N to read as follows:

§ 86.1313–2004 Fuel specifications.

Section 86.1313–04 includes text that specifies requirements that differ from § 86.1313–94 and § 86.1313–98. Where a paragraph in § 86.1313–94 or § 86.1313–98 is identical and applicable to § 86.1313–04, this may be indicated by specifying the corresponding paragraph and the statement ''[Reserved]. For guidance see § 86.1313–94.'' or ''[Reserved]. For guidance see § 86.1313–98.''.

(a) *Gasoline fuel.* (1) Gasoline having the following specifications will be used by the Administrator in exhaust and evaporative emission testing of petroleum-fueled Otto-cycle engines, except that the Administrator will not use gasoline having a sulfur specification higher than 0.0045 weight percent. Gasoline having the following specification or substantially equivalent specifications approved by the Administrator, must be used by the manufacturer in exhaust and evaporative testing except that octane specifications do not apply:

Item	ASTM test method No.	Value
(i) Octane, Research, Min.	D2699	93
(ii) Sensitivity, Min.		7.5
(iii) Lead (organic), maximum: g/U.S. gal. (g/liter)	D3237	0.050 (0.013)
(iv) Distillation Range:	D86	
(A) IBP [1]: °F (°C)		75–95 (23.9–35)
(B) 10 pct. point: °F (°C)		120–135 (48.9–57.2)

EXHIBIT J

Item	ASTM test method No.	Value
(C) 50 pct. point: °F (°C)		200–230 (93.3–110)
(D) 90 pct. point: °F (°C)		300–325 (148.9–162.8)
(E) EP, max: °F (°C)		415 (212.8)
(v) Sulfur, weight pct.	D1266	0.0015–0.008
(vi) Phosphorous, max. g/U.S. gal (g/liter)	D3231	0.005 (0.0013)
(vii) RVP [2, 3]	D3231	8.7–9.2 (60.0–63.4)
(viii) Hydrocarbon composition:	D1319	
(A) Olefins, max. pct.		10
(B) Aromatics, max, pct.		35
(C) Saturates		Remainder

[1] For testing at altitudes above 1,219 m (4000 feet), the specified range is 75–105 deg. F (23.9–40.6 deg. C).
[2] For testing which is unrelated to evaporative emission control, the specified range is 8.0–9.2 psi (55.2–63.4 kPa).
[3] For testing at altitudes above 1,219 m (4000 feet), the specified range is 7.6–8.0 psi (52–55 kPa).

(2) For engines certified for sale in the 50 United States, ''California Phase 2'' gasoline having the specifications listed in the table in this section may be used in exhaust emission testing as an option to the specifications in paragraph (a)(1) of this section. If a manufacturer elects to utilize this option, the manufacturer must conduct exhaust emission testing with gasoline having the specifications listed in the table in this paragraph (a)(2). However, the Administrator may use or require the use of test fuel meeting the specifications in paragraph (a)(1) of this section for certification confirmatory testing, selective enforcement auditing and in-use testing. All fuel property test methods for this fuel are contained in Chapter 4 of the California Regulatory Requirements Applicable to the National Low Emission Vehicle Program (October, 1996). These requirements are incorporated by reference (see § 86.1). The table follows:

Fuel property	Limit
(i) Octane, (R+M)/2 (min)	91
(ii) Sensitivity (min)	7.5
(iii) Lead, g/gal (max) (No lead added)	0–0.01
(iv) Distillation Range, °F:	
(A) 10 pct. point,	130–150
(B) 50 pct. point,	200–210
(C) 90 pct. point,	290–300
(D) EP, maximum	390
(v) Residue, vol % (max)	2.0
(vi) Sulfur, ppm by wt.	15–40, except that Administrator may use and approve for use, lower ranges where such ranges are consistent with current California requirements.
(vii) Phosphorous, g/gal (max)	0.005
(viii) RVP, psi	6.7–7.0
(ix) Olefins, vol %	4.0–6.0
(x) Total Aromatic Hydrocarbons (vol %)	22–25
(xi) Benzene, vol %	0.8–1.0
(xii) Multi-Substituted Alkyl Aromatic Hydrocarbons, vol %	12–14
(xiii) MTBE, vol %	10.8–11.2
(xiv) Additives	See Chapter 4 of the California Regulatory Requirements Applicable to the National Low Emission Vehicle Program (October, 1996). These procedures are incorporated by reference (see § 86.1).
(xv) Copper Corrosion	No. 1
(xvi) Gum, Washed, mg/100 ml (max)	3.0
(xvii) Oxidation Stability, minutes (min)	1000
(xviii) Specific Gravity	No limit; report to purchaser required
(xix) Heat of Combustion	No limit; report to purchaser required
(xx) Carbon, wt %	No limit; report to purchaser required
(xxi) Hydrogen, wt %	No limit; report to purchaser required

(3)(i) Unless otherwise approved by the Administrator, unleaded gasoline representative of commercial gasoline that will be generally available through retail outlets must be used in service accumulation. Unless otherwise approved by the Administrator, this gasoline must have a minimum sulfur content of 15 ppm. Unless otherwise approved by the Administrator, fuel used for evaporative emission durability demonstration must contain ethanol as required by § 86.1824–01(a)(2)(iii). Leaded gasoline must not be used in service accumulation.

(ii) Unless otherwise approved by the Administrator, the octane rating of the gasoline used must be no higher than 1.0 Retail octane number above the lowest octane rating that meets the fuel grade the manufacturer will recommend to the ultimate purchaser for the relevant production vehicles. If the manufacturer recommends a Retail octane number rather than a fuel grade, then the octane rating of the service accumulation gasoline can be no higher than 1.0 Retail octane number above the recommended Retail octane number. The service accumulation gasoline must

EXHIBIT J

also have a minimum sensitivity of 7.5 octane numbers, where sensitivity is defined as the Research octane number minus the Motor octane number.

(iii) The Reid Vapor Pressure of the gasoline used must be characteristic of the motor fuel used during the season in which the service accumulation takes place.

(4) The specification range of the gasoline to be used under paragraph (a) of this section must be reported in accordance with § 86.094–21(b)(3).

(b) heading and (b)(1) [Reserved]. For guidance see § 86.1313–94.

(b)(2) [Reserved]. For guidance see § 86.1313–98.

(b)(3) through (g) [Reserved]. For guidance see § 86.1313–94.

32. A new § 86.1313–2007 is added to Subpart N to read as follows:

§ 86.1313–2007 Fuel specifications.

Section 86.1313–2007 includes text that specifies requirements that differ from § 86.1313–94 and § 86.1313–2004. Where a paragraph in § 86.1313–94 or § 86.1313–2004 is identical and applicable to § 86.1313–2007, this may be indicated by specifying the corresponding paragraph and the statement ''[Reserved]. For guidance see § 86.1313–94.'' or ''[Reserved]. For guidance see § 86.1313–04.''.

(a) [Reserved]. For guidance see § 86.1313–2004.

(b) heading and (b)(1) [Reserved]. For guidance see § 86.1313–94.

(b)(2) Petroleum fuel for diesel engines meeting the specifications in Table N07–2, or substantially equivalent specifications approved by the Administrator, shall be used in exhaust emissions testing. The grade of petroleum fuel used shall be commercially designated as ''Type 2-D'' grade diesel fuel except that fuel commercially designated as ''Type 1-D'' grade diesel fuel may be substituted provided that the manufacturer has submitted evidence to the Administrator demonstrating to the Administrator's satisfaction that this fuel will be the predominant in-use fuel. Such evidence could include such things as copies of signed contracts from customers indicating the intent to purchase and use ''Type 1-D'' grade diesel fuel as the primary fuel for use in the engines or other evidence acceptable to the Administrator. (Note: Vehicles certified under § 86.007–11(f) must be tested using the test fuel specified in § 86.1313–2004, unless otherwise allowed by the Administrator.) Table N07–2 follows:

TABLE N07–2

Item		ASTM test method No.	Type 1–D	Type 2–D
(i) Cetane Number		D613	40–54	40–50
(ii) Cetane Index		D976	40–54	40–50
(iii) Distillation range:				
(A) IBP	°F	D86	330–390	340–400
	(°C)		(165.6–198.9)	(171.1–204.4)
(B) 10 pct. point	°F	D86	370–430	400–460
	(°C)		(187.8–221.1)	(204.4–237.8)
(C) 50 pct. point	°F	D86	410–480	470–540
	(°C)		(210.0–248.9)	(243.3–282.2)
(D) 90 pct. point	°F	D86	460–520	560–630
	(°C)		(237.8–271–1)	(293.3–332.2)
(E) EP	°F	D86	500–560	610–690
	(°C)		(260.0–293.3)	(321.1–365.6)
(iv) Gravity	°API	D287	40–44	32–37
(v) Total sulfur	ppm	D2622	7–15	7–15
(vi) Hydrocarbon composition:.				
(A) Aromatics, minimum (Remainder shall be paraffins, naphthenes, and olefins).	pct.	D5186	8	27
(vii) Flashpoint, min	°F	D93	120	130
	(°C)		(48.9)	(54.4)
(viii) Viscosity	centistokes	D445	1.6–2.0	2.0–3.2

(3) Petroleum Diesel fuel for diesel engines meeting the specifications in table N07–3, or substantially equivalent specifications approved by the Administrator, shall be used in service accumulation. The grade of petroleum diesel fuel used shall be commercially designated as Type 2–D'' grade diesel fuel except that fuel commercially designated as ''Type 1–D'' grade Diesel fuel may be substituted provided that the manufacturer has submitted evidence to the Administrator demonstrating to the Administrator's satisfaction that this fuel will be the predominant in-use fuel. Such evidence could include such things as copies of signed contracts from customers indicating the intent to purchase and use ''Type 1–D'' grade diesel fuel as the primary fuel for use in the engines or other evidence acceptable to the Administrator. Table N07–03 follows:

TABLE N07–3

Item		ASTM test method No.	Type 1–D	Type 2–D
(i) Cetane Number		D613	40–56	38–58
(ii) Cetane Index		D976	min. 40	min. 40
(iii) Distillation range:				
90 pct. point	°F	D86	440–530	540–630
	(°C)		(226.7–276–7)	(293.3–332.2)
(iv) Gravity	°API	D287	39–45	30–39
(v) Total sulfur	ppm	D2622	7–15	7–15

EXHIBIT J

TABLE N07–3—Continued

Item		ASTM test method No.	Type 1–D	Type 2–D
(vi) Flashpoint, min	°F	D93	130	130
	(°C)		(54.4)	(54.4)
(vii) Viscosity	centistokes	D445	1.2–2.2	1.5–4.5

(b)(4) through (g) [Reserved]. For guiDance see § 86.1313–94.

33. Section 86.1319–90 is amended by redesignating paragraph (e) as paragraph (f), and adding a new paragraph (e) to read as follows:

§ 86.1319–90 CVS calibration.

* * * * *

(e) *SSV calibration.* (1) The calibration of the SSV located in the tunnel shall be conducted in a similar manner as the CFV or PDP calibration. Gas flow within the SSV is a function of inlet pressure, P_1, the inlet temperature, T_1, and the pressure drop between the throat and the inlet, DP. Note that the following procedure is consistent with SAE J244. The calibration procedure described in paragraph (e)(3) of this section establishes the values of the coefficients at measured values of pressure, temperature and airflow.

(i) The flow rate for a subsonic venturi is calculated as a volumetric flow rate (Q_s) or a mass flow rate (Q_m) as follows: or

$$Q_s = \frac{Q_m}{\rho_s} = \frac{K_q}{\rho_s}\left(\frac{C_d * Y * d^2}{\sqrt{1-\beta^4}}\right)\sqrt{\rho_i * \Delta P}$$

$$Q_m = K_q * C_d * Y * d^2\left(\frac{\rho_i * \Delta P}{1-\beta^4}\right)^{1/2}$$

Where:
K_q = 0.0021074 (SI units).
Q_s = Air Volume Flow, SCFM (m^3/min).
Q_m = Air Mass Flow, lbm/min (kg/min).
ρ_s = Density at Standard Conditions, lbm/ft^3 (kg/m^3) as specified in paragraph (e)(1)(v) of this section.
ρ_s = Density at inlet conditions, lbm/ft^3 (kg/m^3), as specified in paragraph (e)(1)(iii) of this section.
C_d = Coefficient of Discharge = Actual Air Flow/Theoretical Air Flow.
Y = Expansion factor, as specified in paragraph (e)(1)(ii) of this section.
d = Throat diameter, inch (mm).
β = Ratio of venturi throat diameter to approach pipe diameter.
ΔP = Pressure drop between inlet and throat, in. H_2O (kPa).

(ii) The expansion factor (Y) is calculated as follows:

$$Y = \left[r^{\frac{2}{k}}\left(\frac{k}{k-1}\right)\left(\frac{1-r^{\left(\frac{k-1}{k}\right)}}{1-r}\right)\left(\frac{1-\beta^4}{1-\beta^4 * r^{\frac{2}{k}}}\right)\right]^{\frac{1}{2}}$$

Where:

$$r = 1 - \frac{\Delta P}{P_{abs}}$$

$$\beta = \frac{d}{D}$$

d = Throat diam., in (mm)

D = Inlet Pipe diam., in (mm)

k = Ratio of Specific Heat (1.40 for Air)

(iii) The inlet density ($\rho 1$) is calculated as follows:

$$\rho_1 = \frac{P_{abs}}{R_{mix} * T_{abs}}$$

Where:
$P_{abs} = P_1 + P_B$
$T_{abs} = T_1 + 2731$
$R_{mix} = R_u / MW_{mix}$
R_u = 8.3144 kJ/kg-mole-K
MW_{mix} = the molecular weight of the mix, as calculated in paragraph (e)(1)(iv) of this section.

(iv) The molecular weight of the mix, is calculated as follows:

$$MW_{mix} = \frac{MW_{AIR} * (P_{abs} - P_V) + MW_{H_2O} * P_v}{P_{abs}}$$

Where:
P_V = Vapor pressure, in Hg (kPa)
MW_{AIR} = 28.964 kg/kg-mole
MW_{H_20} = 18.015 kg/kg-mole

(v) The density at standard conditions of 101.33 kPa and 20 °C is calculated as follows:

EXHIBIT J

$$\rho_s = \frac{101.33}{\frac{8.3144}{28.964} * 293.15} = 1.2041 \text{ kg/m}^3$$

(2) The venturi manufacturer's recommended procedure shall be followed for calibrating electronic portions of the SSV.

(3) Measurements necessary for flow calibration of the SSV are as follows:

CALIBRATION DATA MEASUREMENT

Parameter	Sym	Units	Tolerance
(i) Barometric pressure (corrected to 32° F)	P_B	in. Hg (kPa)	± .01in. Hg (± .034kPa)
(ii) Air temperature, into calibration venturi	ETI	° F (° C)	±.5 °F (.28° C)
(iii) Pressure drop between the inlet and throat of calibration venturi (corrected to 68° F).	EDP	in. H_2O (kPA)	± .05 in. H_2O (±.012kPa)
(iv) Air Flow	Q_S	Std ft³/min (m³/min).	± 5% of NIST "true" value
(v) SSV inlet depression	P_I	in. H_2O (kPa)	± .23 in. H_2O (±.057kPa)
(vi) Pressure drop between the inlet and throat of SSV	DP	in. H_2O (kPa)	±.05 in. H_2O (±.012kPa)
(vii) Water vapor pressure of inlet air	P_V	in. Hg (kPa)	±.10 in. Hg (± .34kPa)
(vii) Temperature at SSV inlet	T_I	°F (°C)	±4.0 °F (2.2° C)

(4) Set up equipment similar to CFV or PDP calibration except the variable flow restrictor valve can be deleted or set in the open position, and the pressure drop reading device must be added. The calibration test must be conducted with the test subsonic venturi in place in its permanent position. Any subsequent changes in upstream or downstream configuration could cause a shift in calibration. Leaks between the calibration metering device and the SSV must be eliminated.

(5) Adjust the variable flow blower or restrictor valve to its maximum in-use flow rate. Allow the system to stabilize and record data from all instruments. Be sure to avoid choke condition.

(6) Vary the flow through a minimum of eight steps covering the intended in-use operating range of the SSV.

(7) Data analyses. If the calibration venturi is used at the tunnel inlet (free standing), then assume a value of β=0. If the SSV installed in the CVS tunnel, use the actual inside tunnel diameter and the throat diameter to compute β.

(i) Assume an initial value for Cd = 0.98 to calculate Q_m for the calculation of Reynolds number, Re,:

$$Re = \frac{6.667E4 * Q_m}{\pi * d * \mu}$$

Where: μ = viscosity of air, centipoise

$$\mu = K_\mu * \frac{T_k^{1.5}}{(T_K + 110.4)}$$

Kμ=1.458E–3

T_K=(T_1°C+273.16)

(ii) From the initial calibration of the venturi, establish an equation of Cd as a function of Re. The following functional forms should be reviewed, but a power series, least-squares fit polynomial equation may result in the best fit. Many factors involved in the installation of SSV and the operating range of the Reynolds number can affect the functional relationship of the Cd with Re. Calculate Cd based on this initial equation of Re. Compute a final Q_m based on this calculated Cd for both the calibration nozzle and the inline SSV.

(8)(i) Compute the percent difference in air flow between the calibration venturi and the inline SSV. If the difference in percent of point is greater than 1%, compute a new Cd and Re for the in-tunnel venturi as follows:

Cd_{new}=Actual Air Flow/Theoretical Air Flow=Qm_{act} /Qm_{theo}

$$Re_{new} = \frac{0.8Qm_{cal}}{\pi * d * \mu}$$

(ii) Qm_{act} is flow measured by the calibration venturi and Qm_{theo} is the theoretical calculated flow based on the in-tunnel SSV conditions with Cd set equal to 1. Re_{new} is based on the calibrated venturi flow, but the in-tunnel SSV properties. Recalculate a new curve fit of Cd_{new} for the inline venturi as a function of Re_{new} following the guidelines in paragraph (e)(7) of this section. Agreement of the fit should be within 1.0% of point. Install the new Cd curve fit in the test cell flow computing device and conduct the propane injection, flow verification test.

* * * * *

34. A new section 86.1323–2007 is added to Subpart N to read as follows:

§ 86.1323–2007 Oxides of nitrogen analyzer calibration.

This section describes the initial and periodic calibration of the chemiluminescent oxides of nitrogen analyzer.

(a) Prior to introduction into service and at least monthly thereafter, the chemiluminescent oxides of nitrogen analyzer must be checked for NO2 to NO converter efficiency. The Administrator may approve less frequent checks of the converter efficiency. Figure N84–9 is a reference for paragraphs (a) (1) through (11) of this section.

(1) Follow good engineering practices for instrument start-up and operation. Adjust the analyzer to optimize performance.

(2) Zero the oxides of nitrogen analyzer with zero-grade nitrogen.

(3) Connect the outlet of the NO_X generator to the sample inlet of the oxides of nitrogen analyzer, which has been set to the most common operating range.

(4) Introduce into the NO_X generator-analyzer system an NO-in-nitrogen (N2) mixture with an NO concentration equal to approximately 80 percent of the most common operating range. The NO2 content of the gas mixture shall be less than 5 percent of the NO concentration.

(5) With the oxides of nitrogen analyzer in the NO mode, record the concentration of NO indicated by the analyzer.

(6) Turn on the NO_X generator O2 supply and adjust the O2 flow rate so that the NO indicated by the analyzer is about 10 percent less than indicated in paragraph (a)(5) of this section. Record the concentration of NO in this NO + O2 mixture.

(7) Switch the NO_X generator to the generation mode and adjust the generation rate so that the NO measured by the analyzer is 20 percent of that

EXHIBIT J

measured in paragraph (a)(5) of this section. There must be at least 10 percent unreacted NO at this point. Record the concentration of residual NO.

(8) Switch the oxides of nitrogen analyzer to the NO_X mode and measure total NO_X. Record this value.

(9) Switch off the NO_X generator but maintain gas flow through the system. The oxides of nitrogen analyzer will indicate the NO_X in the NO + O2 mixture. Record this value.

(10) Turn off the NO_X generator O2 supply. The analyzer will now indicate the NO_X in the original NO-in-N2 mixture. This value should be no more than 5 percent above the value indicated in paragraph (a)(4) of this section.

(11) Calculate the efficiency of the NO_X converter by substituting the concentrations obtained into the following equation:

$$\text{Percent} - \text{efficiency} = \left(1 + \frac{a - b}{c - d}\right) \times 100$$

Where:
a = concentration obtained in paragraph (a)(8) of this section,
b = concentration obtained in paragraph (a)(9) of this section,
c = concentration obtained in paragraph (a)(6) of this section,
d = concentration obtained in paragraph (a)(7) of this section.

(12) If converter efficiency is not greater than 90 percent, repair the analyzer. The repaired analyzer must achieve a converter efficiency greater than 90 percent before the analyzer may be used.

(b) *Accuracy.* The accuracy at the minimum limit of the NO_X analyzer is defined in § 86.1338–2007. In general the analyzer's minimum limit shall be the lowest concentration within a given range, in which it has an accuracy of ±2 percent of point.

(c) *Initial and periodic calibration.* Prior to its introduction into service and monthly thereafter, the chemiluminescent oxides of nitrogen analyzer shall be calibrated on all normally used instrument ranges. Use the same flow rate as when analyzing samples. Proceed as follows:

(1) Adjust analyzer to optimize performance.

(2) Zero the oxides of nitrogen analyzer with zero-grade nitrogen (N2).

(3) (i) Calibrate all operating ranges with a minimum of 9 NO-in-N2 calibration gases (*e.g.*, 10, 20, 30, 40, 50, 60, 70, 80, and 90 percent of that range) and one zero-grade N2 gas. Sound engineering judgment shall dictate appropriate spacing and weighting of the calibration points.

(ii) For each range calibrated, if all deviations from a least-squares best-fit straight line are within ±2 percent of the value at each non-zero data point and within ±0.3 percent of full scale on the zero data point, then concentration values may be calculated using the linear calibration equation for that range. If the specified deviations are exceeded for ranges that have a minimum limit of 1 ppm or greater, then the best-fit non-linear equation that represents the data within these deviations may be used to determine concentration values. For ranges that have a minimum limit less than 1 ppm, only a linear or second order non-linear equation that represents the data within these deviations, may be used to determine concentration values.

(d) *Chemiluminescent NO_X analyzer interference check (i.e., quench check).* Prior to its introduction into service and at least once per year thereafter, the quench check described in this section shall be performed on CLD NO_X analyzers. CO2 and water vapor interfere with the response of a CLD by collisional quenching. The combined quench effect at their highest expected concentrations shall not exceed 2 percent.

(1) *CO_2 quench check procedure:* (i) For the procedure described in this paragraph, variations are acceptable provided that they produce equivalent $\%CO2_{quench}$ results. Connect a pressure-regulated CO_2 span gas to one of the inlets of a three-way valve. Its CO2 concentration should be approximately twice the maximum CO_2 concentration expected during testing. The valve must be leak-free, and its wetted parts must be made of a stainless steel or other inert material. Connect a pressure-regulated zero-grade N_2 gas to the other inlet of the three-way valve. Connect the single outlet of the valve to the balance-gas port of a properly operating gas divider. Connect a pressure-regulated NO span gas, which has approximately twice the typical NO concentration expected during testing, to the span-port of the gas divider. Configure the gas divider such that nearly equal amounts of the span gas and balance gas are blended with each other. Viscosity corrections shall be applied appropriately to ensure correct mass flow determinations.

(ii) With the CO_2 flowing to the balance port and the NO flowing to the span port, measure a stable CO_2 concentration from the gas divider's outlet with a properly calibrated NDIR analyzer. Record this concentration in percent (%); this is ''$\%CO_2$''. This value will be used in the water vapor quench check calculations that are detailed in the following section. After the $\%CO_2$ measurement, measure the NO concentration at the gas divider outlet with the CLD analyzer in the NO mode. Record this concentration in ppm; this is ''NO_{CO2}''. Then switch the three-way valve such that 100 percent N_2 flows to the balance port inlet. Monitor the CO_2 concentration of the gas divider's outlet until its concentration stabilizes at zero. Then measure the stable NO concentration from the gas divider's outlet. Record this value in ppm; this is ''NO_{N2}''. Calculate $\%CO_{2quench}$ as follows:

$$\%CO_{2quench} = (1.00 - (NO_{CO2}/NO_{N2})) \times 100$$

(2) Water vapor quench check procedure:

(i) For all dry CLD analyzers it must be demonstrated that for the highest expected water vapor concentration (*i.e.,* ''$\%H_2O_{exp}$'' as calculated later in this section), the water removal technique maintains CLD humidity at less than or equal to 5 $g_{water}/kg_{dry\ air}$ (or about 0.008 percent H_2O), which is 100% RH at 3.9 °C and 101.3 kPa. This humidity specification is also equivalent to about 25% RH at 25 °C and 101.3 kPa. This may be demonstrated by measuring the temperature at the outlet of a thermal dehumidifier, or by measuring humidity at a point just upstream of the CLD. Humidity of the CLD exhaust might also be measured as long as the only flow into the CLD is the flow out of the dehumidifier.

(ii) For all ''wet'' CLD analyzers the following water vapor quench check procedure shall be followed. Measure an NO span gas, which has 90% to 100% of the typical NO expected during testing, using the CLD in the NO mode. Record this concentration in ppm; this is ''NO_{dry}''. Then bubble the same NO span gas through distilled water in a sealed vessel at 25 °C ±10 °C. This temperature specification imposed to ensure that the H_2O_{vol} calculation (refer to (iii) of this section) returns an accurate result. To prevent subsequent condensation, this temperature must also be less than any temperature that the wetted sample will experience between the sealed vessel's outlet and the CLD. Record the vessel's water temperature in °C; this is ''T_{sat}''. Record the vessel's absolute pressure in kPa; this is ''P_{sat}''. Measure the wetted span gas with the CLD, and record this value in ppm; this is ''NO_{wet}''.

(iii) Calculations for water quench must consider dilution of the NO span gas with water vapor and scaling of the water vapor concentration to that expected during testing.

EXHIBIT J

(A) Calculate the volume fraction of water vapor in the wetted span gas, as $H_2O_{vol} = (\exp(3.69 - (81.28/T_{sat})) + 1.61)/P_{sat}$. This calculation approximates some of the thermodynamic properties of water based on the ''1995 Formulation for the Thermodynamic Properties of Ordinary Water Substance for General and Scientific Use'', issued by The International Association for the Properties of Water and Steam (IAPWS). However, this approximation should only be used as prescribed in this section because it is an exponential fit that is accurate for data at 25 °C ±10 °C. Then, assuming a diesel fuel atomic hydrogen to carbon ratio of 1.8, and an intake and dilution air humidity of 75 grains (10.71 $g_{water}/kg_{dry\ air}$ or 54.13 percent RH at 25 °C and 101.3 kPa),

(B) Calculate the maximum percent water vapor expected during testing; as $\%H_2O_{exp} = (0.90 \times \%CO_2) + 1.69$. $\%CO_2$ is the value measured during the $\%CO_2$ quench check.

(C) Calculate the expected wet concentration of NO in ppm; as $NO_{exp} = NO_{dry} \times (1.00 - H_2O_{vol})$

(iv) Calculate the percent water vapor quench as:

$$\%H_2O_{quench} = ((NO_{exp} - NO_{wet})/NO_{exp}) \times (\%H_2O_{exp}/H_2O_{vol})$$

(3) Add the $\%CO_{2quench}$ and the $\%H_2O_{quench}$ values. Their sum may not exceed the limit set in paragraph (d). If their sum is greater than this limit, then the CLD instrument may not be used to perform testing unless it is repaired. The analyzer must be shown to pass this quench check after the repair before it may be used for testing.

35. Section 86.1330–90 is amended by revising paragraph (a) to read as follows:

§ 86.1330–90 Test sequence; general requirements.

(a) The test sequence shown in Figure N90–10 shows the major steps of the test procedure, as follows:

BILLING CODE 6560–50–P

EXHIBIT J

Figure N90-10 Test Sequence

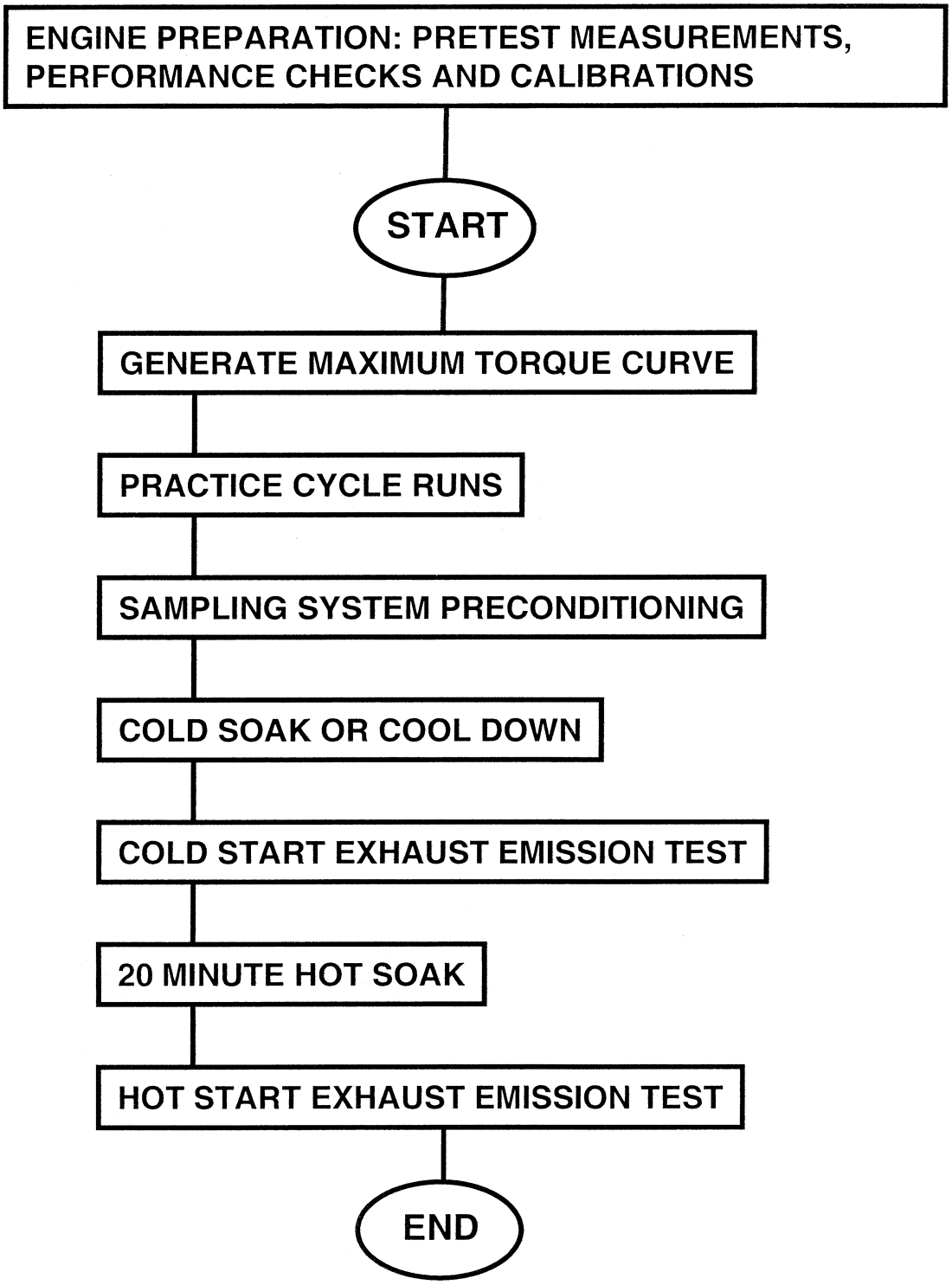

BILLING CODE 6560–50–C

EXHIBIT J

* * * * *

36. Section 86.1334–84 is amended by revising paragraph (a)(1) and (a)(2) to read as follows:

§ 86.1334–84 Pre-test engine and dynamometer preparation.

(a) * * * (1) Before the cold soak or cool down:

(i) Final calibration of the dynamometer and throttle control systems may be performed. These calibrations may consist of steady-state operations and/or actual practice cycle runs, and must be completed before sampling system preconditioning (if applicable).

(ii) Conduct sampling system preconditioning for diesel engines (optional for model years prior to 2007) by operating the engine at a condition of rated-speed, 100 percent torque for a minimum of 20 minutes while simultaneously operating the CVS and secondary dilution system and taking particulate matter emissions samples from the secondary dilution tunnel . Particulate sample filters need not be stabilized or weighed, and may be discarded. Filter media may be changed during conditioning as long as the total sampled time through the filters and sampling system exceeds 20 minutes. Flow rates shall be set at the approximate flow rates selected for transient testing. Torque shall be reduced from 100 percent torque while maintaining the rated speed condition as necessary to prevent exceeding the maximum sample zone temperature specifications of § 86.1310–2007.

(2) Following sampling system preconditioning cycle, the engine shall be cooled per § 86.1335–90.

* * * * *

37. A new section 86.1337–2007 is added to subpart N to read as follows:

§ 86.1337–2007 Engine dynamometer test run.

(a) The following steps shall be taken for each test:

(1) Prepare for the cold-start test.

(i) For gasoline- and methanol-fueled engines only, evaporative emission canisters shall be prepared for use in this testing in accordance with the procedures specified in § 86.1232–96 (h) or (j). The size of the canisters used for testing shall correspond with the largest canister capacity expected in the range of vehicle applications for each engine. (The Administrator may, at his/her discretion, use a smaller canister capacity.) Attach the evaporative emission canister(s) to the engine, using the canister purge plumbing and controls employed in vehicle applications of the engine being tested. Plug the canister port that is normally connected to the fuel tank.

(ii) Prepare the engine, dynamometer, and sampling system.

(iii) Change filters, etc., and leak check as necessary.

(2) Connect evacuated sample collection bags to the dilute exhaust and dilution air sample collection systems if bag sampling is used.

(3) For methanol-fueled vehicles, install fresh methanol and formaldehyde impingers (or cartridges) in the exhaust and dilution air sample systems for methanol and formaldehyde. A single dilution air sample covering the total test period may be utilized for methanol and formaldehyde background. (Background measurements of methanol and formaldehyde may be omitted and concentrations assumed to be zero for calculations in § 86.1344.)

(4) Attach the CVS to the engine exhaust system any time prior to starting the CVS.

(5) Start the CVS (if not already on), the sample pumps (except for the particulate sample pump(s), if applicable), the engine cooling fan(s), and the data collection system. The heat exchanger of the constant volume sampler (if used), and the heated components of any continuous sampling system(s) (if applicable) shall be preheated to their designated operating temperatures before the test begins. (See § 86.1340(e) for continuous sampling procedures.)

(6) Adjust the sample flow rates to the desired flow rates and set the CVS gas flow measuring devices to zero. CFV–CVS sample flow rate is fixed by the venturi design.

(7) For engines tested for particulate emissions, carefully install a clean, loaded particulate sample filter cartridge into the filter holder assembly. It is recommended that this be done within the filter stabilization environment, with both ends of the filter holder assembly plugged during transport to the emissions test facility. Install the assembled filter holder into the sample flow line.

(8) Follow the manufacturer's instructions for cold starting. Simultaneously start the engine and begin exhaust and dilution air sampling. For petroleum-fueled diesel engines (and natural gas-fueled, liquified petroleum gas-fueled or methanol-fueled diesels, if used) Turn on the hydrocarbon and NO_X (and CO and CO_2, if continuous) analyzer system integrators (if used), and turn on the particulate sample pumps and indicate the start of the test on the data collection medium.

(9) Allow the engine to idle freely with no-load for 24±1 seconds. This idle period for automatic transmission engines may be interpreted as an idle speed in neutral or park. All other idle conditions shall be interpreted as an idle speed in gear. It is permissible to lug the engine down to curb idle speed during the last 8 seconds of the free idle period for the purpose of engaging dynamometer control loops.

(10) Begin the transient engine cycles such that the first non-idle record of the cycle occurs at 25±1 seconds. The free idle time is included in the 25±1 seconds.

(i) During particulate sampling it must be demonstrated that the ratio of main tunnel flow to particulate sample flow does not change by more than ±5.0 percent of its set point value (except for the first 10 seconds of sampling). For double dilution operation, sample flow is the net difference between the flow rate through the sample filters and the secondary dilution air flow rate.

(ii) Record flow. If the set flow rate cannot be maintained because of high particulate loading on the filter, the test shall be terminated. The test shall be rerun using a lower sample flow rate or greater dilution.

(11) Begin the transient engine cycles such that the first non-idle record of the cycle occurs at 25±1 seconds. The free idle time is included in the 25±1 seconds.

(12) On the last record of the cycle, cease sampling. Immediately turn the engine off and start a hot-soak timer. Also turn off the particulate sample pumps, the gas flow measuring device(s) and any continuous analyzer system integrator and indicate the end of the test on the data collection medium. Sampling systems should continue to sample after the end of the test cycle until system response times have elapsed.

(13) Immediately after the engine is turned off, turn off the engine cooling fan(s) if used. As soon as possible, transfer the ''cold start cycle'' exhaust and dilution air bag samples to the analytical system and process the samples according to § 86.1340. A stabilized reading of the exhaust sample on all analyzers shall be obtained within 20 minutes of the end of the sample collection phase of the test. Analysis of the methanol and formaldehyde samples shall be obtained within 24 hours of the end of the sample collection period. For particulate measurements, carefully remove the filter holder from the sample flow apparatus

(14) Allow the engine to soak for 20±1 minutes.

EXHIBIT J

(15) Prepare the engine and dynamometer for the hot start test.

(16) Connect evacuated sample collection bags to the dilute exhaust and dilution air sample collection systems.

(17) Install fresh methanol and formaldehyde impingers (or capsules) in the exhaust and dilution air sample systems for methanol and formaldehyde.

(18) Start the sample pumps (except the particulate sample pump(s), if applicable), the engine cooling fan(s) and the data collection system. The heat exchanger of the constant volume sampler (if used) and the heated components of any continuous sampling system(s) (if applicable) shall be preheated to their designated operating temperatures before the test begins. See § 86.1340(e) for continuous sampling procedures.

(19) Adjust the sample flow rates to the desired flow rate and set the CVS gas flow measuring devices to zero.

(20) For diesel engines tested for particulate, carefully install a clean, loaded particulate sample filter cartridge in the filter holder assembly and install the filter holder assembly in the sample flow line.

(21) Follow the manufacturer's choke and throttle instruction for hot starting. Simultaneously start the engine and begin exhaust and dilution air sampling. For diesel engines, turn on the hydrocarbon and NO_X (and CO and CO2, if continuous) analyzer system integrator (if used), indicate the start of the test on the data collection medium, and turn on the particulate sample pump(s).

(22) [Reserved]

(23) Allow the engine to idle freely with no-load for 24±1 seconds. The provisions and interpretations of paragraph (a)(9) of this section apply.

(24) Begin the transient-engine cycle such that the first non-idle record of the cycle occurs at 25±1 seconds. The free idle is included in the 25±1 seconds.

(25) On the last record of the cycle, allow sampling system response times to elapse and cease sampling. Turn off the particulate sample pump(s) (if appropriate), the gas flow measuring device(s) and any continuous analyzer system integrator and indicate the end of the test on the data collection medium.

(26) As soon as possible, transfer the ''hot start cycle'' exhaust and dilution air bag samples to the analytical system and process the samples according to § 86.1340. A stabilized reading of the exhaust sample on all analyzers shall be obtained within 20 minutes of the end of the sample collection phase of the test. Analyze the methanol and formaldehyde samples within 24 hours. (If it is not possible to perform analysis within 24 hours, the samples should be stored in a cold (approximately 0 deg.C) dark environment until analysis can be performed). For particulate measurements, carefully remove the filter holder assembly. It is recommended that the filter cartridge be transferred to and from the filter stabilization environment within the filter holder assembly with both ends plugged, and that the cartridge be removed from the filter holder assembly within the stabilization environment. Transfer the particulate filter to the stabilization environment for post-test stabilization. Filters may be stabilized in the petri dishes while still within the filter cartridges, or the cartridge tops may be removed for stabilization, or the filters may be entirely removed from the filter cartridges and stabilized in the petri dishes alone. Removal of the filters from the filter cartridges shall only take place within the stabilization environment.

(27) The CVS and the engine may be turned off, if desired.

(b) The procedure in paragraph (a) of this section is designed for one sample bag for the cold start portion and one for the hot start portion.

(c) If a dynamometer test run is determined to be void, corrective action may be taken. The engine may then be allowed to cool (naturally or forced) and the dynamometer test rerun.

38. A new section 86.1338–2007 is added to Subpart N to read as follows:

§ 86.1338–2007 Emission measurement accuracy.

(a) *Minimum limit.* (1) The minimum limit of an analyzer must be equal to or less than one-half of the average diluted concentration for an engine emitting the maximum amount of the applicable pollutant allowed by the applicable standard. For example, if with a given dilution and sampling system, an engine emitting NO_X at the level of the standard (*e.g.,* 0.20 g/bhp-hr NO_X) would result in an average NO_X concentration of 1.0 ppm in the diluted sample, then the minimum limit for the NO_X analyzer must be less than or equal to 0.5 ppm.

(2) For the purpose of this section, ''minimum limit'' means the lowest of the following levels:

(i) The lowest NO_X concentration in the calibration curve for which an accuracy of ±2 percent of point has been demonstrated as specified in paragraph (a)(3) of this section; or

(ii) Any NO_X concentration for which the test facility has demonstrated sufficient accuracy to the Administrator's satisfaction prior to the start of testing, such that it will allow a meaningful determination of compliance with respect to the applicable standard.

(3) For determination of the analyzer's minimum limit, a NO_X concentration that is less than or equal to one-half of the average NO_X concentration determined in paragraph (a)(1) of this section shall be measured by the oxides of nitrogen analyzer following the analyzer's monthly periodic calibration. This measurement must be made to ensure the accuracy of the calibration curve to within ±2 percent of point accuracy of the appropriate least-squares fit, at less than or equal to one half of the average expected diluted NO_X concentration determined in paragraph (a)(1) of this section.

(b) *Measurement accuracy—Bag sampling.* Analyzers used for bag analysis must be operated such that the measured concentration falls between 15 and 100 percent of full scale, with the following exception: concentrations below 15 percent of full scale may be used if the minimum limit of the analyzer within the range meets the requirement of paragraph (a) of this section.

(c) *Measurement accuracy—Continuous measurement.* (1) Analyzers used for continuous analysis must be operated such that the measured concentration falls between 15 and 100 percent of full scale, with the following exceptions:

(i) Concentrations below 15 percent of full scale may be used if the minimum limit of the analyzer within the range meets the requirement of paragraph (a) of this section.

(ii) Analyzer response over 100% of full scale may be used if it can be shown that readings in this range are accurate.

(2) If the analyzer response exceeds the level allowed by paragraph (c)(1)(ii) of this section, the test must be repeated using a higher range and both results must be reported. The Administrator may waive this requirement.

(d) If a gas divider is used, the gas divider shall conform to the accuracy requirements specified in § 86.1314–84(g), and shall be used according to the procedures contained in paragraphs (a) and (b) of this section.

39. Section 86.1339–90 is amended by adding paragraph (h) to read as follows:

§ 86.1339–90 Particulate filter handling and weighing.

* * * * *

(h) This section does not apply for tests conducted according to the provisions of § 86.1312–2007.

EXHIBIT J

40. Section 86.1360–2007 is amended by revising the section heading, adding introductory text, and revising paragraphs (b), (e)(2), (e)(3), and (e)(6)(ii), to read as follows:

§ 86.1360–2007 Supplemental emission test; test cycle and procedures.

The test procedures of this subpart N apply for supplemental emission testing, except as specified otherwise in this section.

* * * * *

(b) *Test cycle.* (1)(i) The following 13-mode cycle must be followed in dynamometer operation on the test engine:

Mode number	Engine speed	Percent load	Weighting factor	Mode length (minutes)
1	Idle		0.15	4
2	A	100	0.08	2
3	B	50	0.10	2
4	B	75	0.10	2
5	A	50	0.05	2
6	A	75	0.05	2
7	A	25	0.05	2
8	B	100	0.09	2
9	B	25	0.10	2
10	C	100	0.08	2
11	C	25	0.05	2
12	C	75	0.05	2
13	C	50	0.05	2

(ii) Upon Administrator approval, the manufacturer may use mode lengths other than those listed in paragraph (b)(1)(i) of this section.

(2) In addition to the 13 test points identified in paragraph (b)(1) of this section, for engines not certified to a NO_X standard or FEL less than1.5 g/bhp-hr, EPA may select, and require the manufacturer to conduct the test using, up to 3 additional test points within the control area (as defined in paragraph (d) of this section). EPA will notify the manufacturer of these supplemental test points in writing in a timely manner before the test. Emissions sampling for the additional test modes must include all regulated gaseous pollutants. Particulate matter does not need to be measured.

* * * * *

(e) * * *

(2) *Test sequence.* The test must be performed in the order of the mode numbers in paragraph (b)(1) of this section. Where applicable, the EPA-selected test points identified under paragraph (b)(2) of this section must be performed immediately upon completion of mode 13. The engine must be operated for the prescribed time in each mode, completing engine speed and load changes in the first 20 seconds of each mode. The specified speed must be held to within ±50 rpm and the specified torque must be held to within plus or minus two percent of the maximum torque at the test speed.

(3) *Particulate sampling.* One filter shall be used for sampling PM over the 13-mode test procedure. The modal weighting factors specified in paragraph (b)(1) of this section shall be taken into account by taking a sample proportional to the exhaust mass flow during each individual mode of the cycle. This can be achieved by adjusting sample flow rate, sampling time, and/or dilution ratio, accordingly, so that the criterion for the effective weighting factors is met. The sampling time per mode must be at least 4 seconds per 0.01 weighting factor. Sampling must be conducted as late as possible within each mode. Particulate sampling shall be completed no earlier than 5 seconds before the end of each mode.

* * * * *

(6) * * *

(ii) For PM measurements, a single filter must be used to measure PM over the 13 modes. The brake-specific PM emission level for the test must be calculated as described for a transient hot start test in § 86.1343. Only the power measured during the sampling period shall be used in the calculation.

* * * * *

41. Section 86.1370–2007 is amended by revising paragraphs (a), (b)(6) and (d), removing and reserving paragraph (b)(5), and adding paragraphs (b)(7) and (g) to read as follows:

§ 86.1370–2007 Not-To-Exceed test procedures.

(a) *General.* The purpose of this test procedure is to measure in-use emissions of heavy-duty diesel engines while operating within a broad range of speed and load points (the Not-To-Exceed Control Area) and under conditions which can reasonably be expected to be encountered in normal vehicle operation and use. Emission results from this test procedure are to be compared to the Not-To-Exceed Limits specified in § 86.007–11 (a)(4), or to later Not-To-Exceed limits. The Not-To-Exceed Limits do not apply for engine starting conditions.

(b) * * *

(5) [Reserved]

(6)(i) For petroleum-fueled diesel cycle engines, the manufacturer may identify particular engine-vehicle combinations and may petition the Administrator at certification to exclude operating points from the Not-to-Exceed Control Area defined in § 86.1370(b)(1) through (5) if the manufacturer can demonstrate that the engine is not capable of operating at such points when used in the specified engine-vehicle combination(s).

(ii) For diesel cycle engines that are not petroleum-fueled, the manufacturer may petition the Administrator at certification to exclude operating points from the Not-to-Exceed Control Area defined in § 86.1370(b)(1) through (5) if the manufacturer can demonstrate that the engine is not expected to operate at such points in normal vehicle operation and use.

(7) Manufacturers may petition the Administrator to limit NTE testing in a single defined region of speeds and loads. Such a defined region must generally be of elliptical or rectangular shape, and must share some portion of its boundary with the outside limits of the NTE zone. Under this provision testing would not be allowed with sampling periods in which operation within that region constitutes more than 5.0 percent of the time-weighted operation within the sampling period. Approval of this limit by the Administrator is contingent on the manufacturer satisfactorily demonstrating that operation at the

EXHIBIT J

speeds and loads within that region accounts for less than 5.0 percent of all in-use operation (weighted by vehicle-miles-traveled or other EPA-approved weightings) for the in-use engines of that configuration (or sufficiently similar engines). At a minimum, this demonstration must include operational data from representative in-use vehicles.

* * * * *

(d) *Not-to-exceed control area limits.* (1) When operated within the Not-To-Exceed Control Area defined in paragraph (b) of this section, diesel engine emissions shall not exceed the applicable Not-To-Exceed Limits specified in § 86.007–11(a)(4) when averaged over any period of time greater than or equal to 30 seconds, except where a longer averaging period is required by paragraph (d)(2) of this section.

(2) For engines equipped with emission controls that include discrete regeneration events, if a regeneration event occurs during the NTE test, then the averaging period must be at least as long as the time between the events multiplied by the number of full regeneration events within the sampling period. The requirement in this paragraph (d)(2) only applies for engines that send an electronic signal indicating the start of the regeneration event.

* * * * *

(g) *NO_X and NMHC aftertreatment warm-up.* For engines equipped with one or more aftertreatment devices that reduce NO_X or NMHC emissions, the NTE NO_X and NMHC emission limits do not apply when the exhaust gas temperature is measured within 12 inches of the outlet of the aftertreatment device and is less the 250°C. For multi-bed systems, it is the temperature at the outlet of the device with the maximum flow rate that determines whether the NTE limits apply.

42. § 86.1803–01 is amended by adding a definition of ''U.S. heavy-duty vehicle sales'' in alphabetical order to read as follows:

§ 86.1803–01 Definitions.

* * * * *

U.S. heavy-duty vehicle sales means sales of heavy-duty vehicles subject to the standards of this subpart, where the sale takes place in any state of the United States except for California (or a state that has adopted California motor vehicle standards for that model year pursuant to section 177 of the Clean Air Act).

* * * * *

43. § 86.1806–05 is amended by revising paragraphs (b) introductory text, (b)(1), and (l) to read as follows:

§ 86.1806–05 On-board diagnostics.

* * * * *

(b) *Malfunction descriptions.* The OBD system must detect and identify malfunctions in all monitored emission-related powertrain systems or components according to the following malfunction definitions as measured and calculated in accordance with test procedures set forth in subpart B of this part (chassis-based test procedures), excluding those test procedures defined as ''Supplemental'' test procedures in § 86.004–2 and codified in §§ 86.158, 86.159, and 86.160.

(1) *Catalysts and particulate traps.* (i) *Otto-cycle.* Catalyst deterioration or malfunction before it results in an increase in NMHC emissions 1.5 times the NMHC standard or FEL, as compared to the NMHC emission level measured using a representative 4000 mile catalyst system.

(ii) *Diesel.* (A) If equipped, catalyst deterioration or malfunction before it results in exhaust emissions exceeding 1.5 times the applicable standard or FEL for NO_X or PM. This requirement applies only to reduction catalysts; monitoring of oxidation catalysts is not required. This monitoring need not be done if the manufacturer can demonstrate that deterioration or malfunction of the system will not result in exceedance of the threshold.

(B) If equipped with a particulate trap, catastrophic failure of the device must be detected. Any particulate trap whose complete failure results in exhaust emissions exceeding 1.5 times the applicable standard or FEL for NO_X or PM must be monitored for such catastrophic failure. This monitoring need not be done if the manufacturer can demonstrate that a catastrophic failure of the system will not result in exceedance of the threshold.

* * * * *

(l) *Phase-in for complete heavy-duty vehicles.* Complete heavy-duty vehicles weighing 14,000 pounds GVWR or less that are not Otto-cycle MDPVs must meet the OBD requirements of this section according to the following phase-in schedule, based on the percentage of projected vehicle sales. The 2004 model year requirements in the following phase-in schedule are applicable only to heavy-duty Otto-cycle vehicles where the manufacturer has selected Otto-cycle Option 1 or 2 for alternative 2003 or 2004 compliance according to § 86.004–01(c)(1) or (2). The 2005 through 2007 requirements in the following phase-in schedule apply to all heavy-duty vehicles weighing 14,000 pounds GVWR or less, excluding MDPVs. If the manufacturer has selected Otto-cycle Option 3 it may exempt 2005 model year complete heavy-duty engines and vehicles whose model year commences before July 31, 2004 from the requirements of this section. For the purposes of calculating compliance with the phase-in provisions of this paragraph (l), heavy-duty vehicles subject to the phase-in requirements of this section may be combined with heavy-duty vehicles subject to the phase-in requirements of paragraph § 86.005–17 (k). The phase-in schedule follows:

OBD COMPLIANCE PHASE-IN FOR COMPLETE HEAVY-DUTY VEHICLES WEIGHING 14,000 POUNDS GVWR OR LESS

Model year	Phase-in based on projected sales
2004 MY	Applicable only to Otto-cycle engines complying with Options 1 or 2; 40% compliance; alternative fuel waivers available.
2005 MY	60% compliance; alternative fuel waivers available.
2006 MY	80% compliance; alternative fuel waivers available.
2007 MY	80% compliance; alternative fuel waivers available.
2008+ MY	100% compliance.

44. A new § 86.1807–07 is added to subpart S to read as follows:

EXHIBIT J

§ 86.1807–07 Vehicle labeling.

Section 86.1807–07 includes text that specifies requirements that differ from those specified in § 86.1807–01. Where a paragraph in § 86.1807–01 is identical and applicable to § 86.1807–07, this may be indicated by specifying the corresponding paragraph and the statement ''[Reserved]. For guidance see § 86.1807–01.''.

(a) through (g) [Reserved]. For guidance see § 86.1807–01.

(h) Model year 2007 and later diesel-fueled Tier 2 vehicles (certified using a test fuel with 15 ppm sulfur or less), must include permanent readily visible labels on the dashboard (or instrument panel) and near all fuel inlets that state ''Use Low-sulfur Diesel Fuel Only'' or ''Low-sulfur Diesel Fuel Only''.

45. A new § 86.1808–07 is added to subpart S to read as follows:

§ 86.1808–07 Maintenance instructions.

Section 86.1808–07 includes text that specifies requirements that differ from those specified in § 86.1808–01. Where a paragraph in § 86.1808–01 is identical and applicable to § 86.1808–07, this may be indicated by specifying the corresponding paragraph and the statement ''[Reserved]. For guidance see § 86.1808–01.''.

(a) through (f) [Reserved]. For guidance see § 86.1808–01.

(g) For each new diesel-fueled Tier 2 vehicle (certified using a test fuel with 15 ppm sulfur or less), the manufacturer shall furnish or cause to be furnished to the purchaser a statement that ''This vehicle must be operated only with low sulfur diesel fuel (that is., diesel fuel meeting EPA specifications for highway diesel fuel, including a 15 ppm sulfur cap).''.

46. Section 86.1810–01 is amended by revising the introductory text to read as follows:

§ 86.1810–01 General standards; increase in emissions; unsafe conditions; waivers.

This section applies to model year 2001 and later light-duty vehicles and light-duty trucks fueled by gasoline, diesel, methanol, natural gas and liquefied petroleum gas fuels. This section also applies to MDPVs and complete heavy-duty vehicles certified according to the provisions of this subpart. Multi-fueled vehicles (including dual-fueled and flexible-fueled vehicles) shall comply with all requirements established for each consumed fuel (or blend of fuels in the case of flexible fueled vehicles). The standards of this subpart apply to both certification and in-use vehicles unless otherwise indicated. For Tier 2 and interim non-Tier 2 vehicles, this section also applies to hybrid electric vehicles and zero emission vehicles. Unless otherwise specified, requirements and provisions of this subpart applicable to methanol fueled vehicles are also applicable to Tier 2 and interim non-Tier 2 ethanol fueled vehicles.

* * * * *

47. Section 86.1816–05 is amended by revising paragraph (g) to read as follows:

§ 86.1816–05 Emission standards for complete heavy-duty vehicles.

* * * * *

(g) *Idle exhaust emission standards, complete heavy-duty vehicles.* Exhaust emissions of carbon monoxide from 2005 and later model year gasoline, methanol, natural gas-and liquefied petroleum gas-fueled complete heavy-duty vehicles shall not exceed 0.50 percent of exhaust gas flow at curb idle for a useful life of 11 years or 120,000 miles, whichever occurs first. This does not apply for vehicles certified to the requirements of § 86.1806–05

* * * * *

48. A new § 86.1816–08 is added to subpart S, to read as follows:

§ 86.1816–08 Emission standards for complete heavy-duty vehicles.

Section 86.1816–08 includes text that specifies requirements that differ from those specified in § 86.1816–05. Where a paragraph in § 86.1816–05 is identical and applicable to § 86.1816–08, this may be indicated by specifying the corresponding paragraph and the statement ''[Reserved]. For guidance see § 86.1816–05.''. This section applies to 2008 and later model year complete heavy-duty vehicles (excluding MDPVs) fueled by gasoline, methanol, natural gas and liquefied petroleum gas fuels except as noted. Multi-fueled vehicles shall comply with all requirements established for each consumed fuel. For methanol fueled vehicles, references in this section to hydrocarbons or total hydrocarbons shall mean total hydrocarbon equivalents and references to non-methane hydrocarbons shall mean non-methane hydrocarbon equivalents.

(a) *Exhaust emission standards.* (1) Exhaust emissions from 2008 and later model year complete heavy-duty vehicles at and above 8,500 pounds Gross Vehicle Weight Rating but equal to or less than 10,000 Gross Vehicle Weight Rating pounds shall not exceed the following standards at full useful life:

(i) [Reserved]

(ii) *Non-methane hydrocarbons.* (A) 0.195 grams per mile; this requirement may be satisfied by measurement of non-methane organic gas or total hydrocarbons, at the manufacturer's option. For alcohol-fueled vehicles, this standard is 0.195 grams per mile NMHCE.

(B) A manufacturer may elect to include any or all of its test groups in the NMHC emissions ABT programs for heavy-duty vehicles, within the restrictions described in § 86.1817–05. or § 86.1817–08. If the manufacturer elects to include test groups in any of these programs, the NMHC FEL may not exceed 0.28 grams per mile. This ceiling value applies whether credits for the family are derived from averaging, banking, or trading.

(iii) *Carbon monoxide.* 7.3 grams per mile.

(iv) *Oxides of nitrogen.* (A)0.2 grams per mile.

(B) A manufacturer may elect to include any or all of its test groups in the NO_X emissions ABT programs for heavy-duty vehicles, within the restrictions described in § 86.1817–05 or § 86.1817–08. If the manufacturer elects to include test groups in any of these programs, the NO_X FEL may not exceed 0.9 grams per mile. This ceiling value applies whether credits for the family are derived from averaging, banking, or trading.

(v) *Particulate.* 0.02 grams per mile.

(vi) *Formaldehyde.* 0.032 grams per mile.

(2) Exhaust emissions from 2008 and later model year complete heavy-duty vehicles above 10,000 pounds Gross Vehicle Weight Rating but less than 14,000 pounds Gross Vehicle Weight Rating shall not exceed the following standards at full useful life:

(i) [Reserved]

(ii) *Non-methane hydrocarbons.* (A) 0.230 grams per mile; this requirement may be satisfied by measurement of non-methane organic gas or total hydrocarbons, at the manufacturer's option. For alcohol-fueled vehicles, this standard is 0.230 grams per mile NMHCE.

(B) A manufacturer may elect to include any or all of its test groups in the NMHC emissions ABT programs for heavy-duty vehicles, within the restrictions described in § 86.1817–05. or § 86.1817–08. If the manufacturer elects to include test groups in any of these programs, the NMHC FEL may not exceed 0.33 grams per mile. This ceiling value applies whether credits for the family are derived from averaging, banking, or trading.

EXHIBIT J

(iii) *Carbon monoxide.* 8.1 grams per mile.

(iv) *Oxides of nitrogen.* (A)0.4 grams per mile.

(B) A manufacturer may elect to include any or all of its test groups in the NO_X emissions ABT programs for heavy-duty vehicles, within the restrictions described in § 86.1817–05. or § 86.1817–08. If the manufacturer elects to include test groups in any of these programs, the NO_X FEL may not exceed 1.0 grams per mile. This ceiling value applies whether credits for the family are derived from averaging, banking, or trading.

(v) *Particulate.* 0.02 grams per mile.

(vi) *Formaldehyde.* 0.040 grams per mile.

(b) [Reserved]

(c) [Reserved]

(d) *Evaporative emissions.* Evaporative hydrocarbon emissions from gasoline-fueled, natural gas-fueled, liquefied petroleum gas-fueled, and methanol-fueled complete heavy-duty vehicles shall not exceed the following standards. The standards apply equally to certification and in-use vehicles. The spitback standard also applies to newly assembled vehicles.

(1) For the full three-diurnal test sequence, diurnal plus hot soak measurements: 1.4 grams per test.

(2) Gasoline and methanol fuel only. For the supplemental two-diurnal test sequence, diurnal plus hot soak measurements: 1.75 grams per test.

(3) Gasoline and methanol fuel only. Running loss test: 0.05 grams per mile.

(4) Gasoline and methanol fuel only. Fuel dispensing spitback test: 1.0 grams per test.

(e) through (h) [Reserved]. For guidance see § 86.1816–05.

(i) *Phase-in options.* (1)(i) For model year 2008, manufacturers may certify some of their test groups to the standards applicable to model year 2008 vehicles under § 86.1816–05, in lieu of the exhaust standards specified in this section. These vehicles must comply with all other requirements applicable to model year 2007 vehicles. The combined number of vehicles in the test groups certified to the 2008 standards may not exceed 50 percent of the manufacturer's U.S. heavy-duty vehicle sales of complete heavy-duty Otto-cycle motor vehicles for model year 2008, except as explicitly allowed by paragraph (i)(2) of this section.

(ii) For model year 2008, manufacturers may certify some of their test groups to the evaporative standards applicable to model year 2007 engines under § 86.1816–05, in lieu of the evaporative standards specified in this section. These vehicles must comply with all other requirements applicable to model year 2008 vehicles, except as allowed by paragraph (i)(1)(i) of this section. The combined number of vehicles in the test groups certified to the 2007 standards may not exceed 50 percent of the manufacturer's U.S. heavy-duty vehicle sales of complete heavy-duty Otto-cycle motor vehicles for model year 2008.

(2)(i) Manufacturers certifying vehicles to all of the applicable standards listed in paragraph (a) of this section prior to model year 2008 (without using credits) may reduce the number of vehicles that are required to meet the standards listed in paragraph (a) of this section in model year 2008 and/or 2009, taking into account the phase-in option provided in paragraph (i)(1) of this section. For every vehicle that is certified early, the manufacturer may reduce the number of vehicles that are required by paragraph (i)(1) of this section to meet the standards listed in paragraph (a) of this section by one vehicle. For example, if a manufacturer produces 100 heavy-duty Otto-cycle vehicles in 2007 that meet all of the applicable the standards listed in paragraph (a) of this section, and it produced 10,000 heavy-duty Otto-cycle vehicles in 2009, then only 9,900 of the vehicles would need to comply with the standards listed in paragraph (a) of this section.

(ii) Manufacturers certifying vehicles to all of the applicable evaporative standards listed in paragraph (d) of this section prior to model year 2008 may reduce the number of vehicles that are required to meet the standards listed in paragraph (d) of this section in model year 2008 and/or 2009, taking into account the phase-in option provided in paragraph (i)(1) of this section. For every vehicle that is certified early, the manufacturer may reduce the number of vehicles that are required by paragraph (i)(1) of this section to meet the evaporative standards listed in paragraph (d) of this section by one vehicle.

(3) Manufacturers certifying vehicles to all of the applicable standards listed in paragraph (i)(3)(i) or (ii) of this section (without using credits) and the evaporative standards listed in paragraph (d) of this section prior to model year 2008 may reduce the number of vehicles that are required to meet the standards listed in paragraph (a) of this section in model year 2008 and/or 2009, taking into account the phase-in option provided in paragraph (i)(1)(i) of this section. For every such vehicle that is certified early with sufficiently low emissions, the manufacturer may reduce the number of vehicles that are required by paragraph (i)(1)(i) of this section to meet the standards listed in paragraph (a) of this section by two vehicles. The applicable standards are:

(i) For complete heavy-duty vehicles at and above 8,500 pounds Gross Vehicle Weight Rating but equal to or less than 10,000 Gross Vehicle Weight Rating: 0.100 g/mile NMHC, 0.10 g/mile NO_X, 3.2 g/mile CO, 0.008 g/mile formaldehyde, and 0.02 g/mile PM.

(ii) For complete heavy-duty vehicles at or above 10,000 pounds Gross Vehicle Weight Rating but equal to or less than 14,000 Gross Vehicle Weight Rating: 0.117 g/mile NMHC, 0.20 g/mile NO_X, 3.7 g/mile CO, 0.010 g/mile formaldehyde, and 0.02 g/mile PM.

(j) (1) For model years prior to 2012, for purposes of determining compliance after title or custody has transferred to the ultimate purchaser, for vehicles meeting the applicable emission standards of this section, the applicable compliance limits shall be determined by adding the applicable adjustment from paragraph (j)(2) of this section to the otherwise applicable standard or FEL.

EXHIBIT J

(2) The in-use adjustments are:

(i) 0.1 g/bhp-hr for NO_X.

(ii) 0.100 g/bhp-hr NMHC.

(iii) 0.01 g/bhp-hr for PM.

49. A new § 86.1817–08 is added to Subpart S to read as follows:

§ 86.1817–08 Complete heavy-duty vehicle averaging, trading, and banking program.

Section 86.1817–08 includes text that specifies requirements that differ from § 86.1817–05. Where a paragraph in § 86.1817–05 is identical and applicable to § 86.1817–08, this may be indicated by specifying the corresponding paragraph and the statement ''[Reserved]. For guidance see § 86.1817–05.''

(a) through (o) [Reserved]. For guidance see § 86.1817–05.

(p) The following provisions apply for model year 2008 and later engines. These provisions apply instead of the provisions of paragraphs § 86.1817–05 (a) through (o) to the extent that they are in conflict.

(1) Manufacturers of Otto-cycle vehicles may participate in an NMHC averaging, banking and trading program to show compliance with the standards specified in § 86.1806–08. The generation and use of NMHC credits are subject to the same provisions in paragraphs § 86.1817–05 (a) through (o) that apply for NO_X credits, except as otherwise specified in this section.

(2) NO_X or NMHC (or NO_X plus NMHC) credits may be exchanged between heavy-duty Otto-cycle test groups certified to the engine standards of subpart A of this part and heavy-duty Otto-cycle test groups certified to the chassis standards of this subpart, subject to an 0.8 discount factor (e.g., 100 grams of NO_X credits generated from vehicles would be equivalent to 80 grams of NO_X credits if they are used in the engine program of subpart A of this part, and vice versa). Credits that were previously discounted when they were banked according to § 86.1817–05(c), are subject to an additional discount factor of 0.888 instead of the 0.8 discount factor otherwise required by this paragraph (p)(2). This results in a total discount of 0.8 ($0.9 \times 0.888 = 0.8$).

(3) Credits are to be rounded to the nearest one-hundredth of a Megagram.

(4) To calculate credits relative to the NO_X standards listed in § 86.1816–08 (a)(1)(iv)(A) or (a)(2)(iv)(A) (0.2 or 0.4 grams per mile, respectively) express the standard and FEL to the nearest one-hundredth of a gram per mile prior to calculating the credits. Thus, either 0.20 or 0.40 should be used as the value for ''Std''.

(5) Credits generated for 2008 and later model year test groups are not discounted (except as specified in § 86.1817–05(c) and paragraph (p)(2) of this section), and do not expire.

(6) For the purpose of using or generating credits during a phase-in of new standards, a manufacturer may elect to split an test group into two subgroups: one which uses credits and one which generates credits. The manufacturer must indicate in the application for certification that the test group is to be split, and may assign the numbers and configurations of vehicles within the respective subfamilies at any time prior to the submission of the end-of-year report described in § 86.1817–05 (i)(3). Manufacturers certifying a split test group may label all of the vehicles within that test group with the same FELs: either with a NO_X FEL and an NMHC FEL, or with a single NO_X+NMHC FEL. The FEL(s) on the label will apply for all SEA or other compliance testing.

(7) Vehicles meeting all of the applicable standards of § 86.1816–08 prior to model year 2008 may generate NMHC credits for use by 2008 or later test groups. Credits are calculated according to § 86.1817–05(c), except that the applicable FEL cap listed in § 86.1816–08(a)(1)(ii)(B) or (2)(ii)(B) applies instead of ''Std'' (the applicable standard).

50. A new § 86.1824–07 is added to subpart S, to read as follows:

EXHIBIT J

§ 86.1824–07 Durability demonstration procedures for evaporative emissions.

§ 86.1824–07 includes text that specifies requirements that differ from those specified in § 86.1824–01. Where a paragraph in § 86.1824–01 is identical and applicable to § 86.1824–07, this may be indicated by specifying the corresponding paragraph and the statement ''[Reserved]. For guidance see § 86.1824–01.''. This section applies to gasoline-, methanol-, natural gas- and liquefied petroleum gas-fueled LDV/Ts, MDPVs, and HDVs.

(a) through (f) [Reserved]. For guidance see § 86.1824–01.

51. § 86.1829–01 is amended by revising paragraph (b)(1)(iii)(B) and adding paragraph (b)(1)(iii)(F) to read as follows:

§ 86.1829–01 Durability and emission testing requirements; waivers.

* * * * *

(b) * * *

(1) * * *

(iii)* * *

(B) In lieu of testing an Otto-cycle light-duty vehicle, light-duty truck, or heavy-duty vehicle for particulate emissions for certification, a manufacturer may provide a statement in its application for certification that such vehicles comply with the applicable standards. Such a statement must be based on previous emission tests, development tests, or other appropriate information.

* * * * *

(F) In lieu of testing a petroleum-fueled heavy-duty vehicle for formaldehyde emissions for certification, a manufacturer may provide a statement in its application for certification that such vehicles comply with the applicable standards. Such a statement must be based on previous emission tests, development tests, or other appropriate information.

* * * * *

52. A new § 86.1863–07 is added to subpart S, to read as follows:

§ 86.1863–07 Optional chassis certification for diesel vehicles.

(a) A manufacturer may optionally certify heavy-duty diesel vehicles under 14,000 pounds GVWR to the standards specified in § 86.1816–08. Such vehicles must meet all requirements of Subpart S that are applicable to Otto-cycle vehicles, except for evaporative, refueling, and OBD requirements.

(b) Diesel vehicles optionally certified under this section are subject to the OBD requirements of § 86.005–17.

(c) Diesel vehicles optionally certified under this section may be tested using the test fuels, sampling systems, or analytical systems specified for diesel engines in Subpart N of this part.

(d) Diesel vehicles optionally certified under this section may not be included in any averaging, banking, or trading program.

(e) The provisions of § 86.004–40 apply to the engines in vehicles certified under this section.

(f) Diesel vehicles may be certified under this section to the standards applicable to model year 2008 prior to model year 2008.

(g) Diesel vehicles optionally certified under this section in model years 2007, 2008, or 2009 shall be included in phase-in calculations specified in § 86.007–11(g).

[FR Doc. 01–2 Filed 1–17–01; 8:45 am]

BILLING CODE 6560–50–P

EXHIBIT J