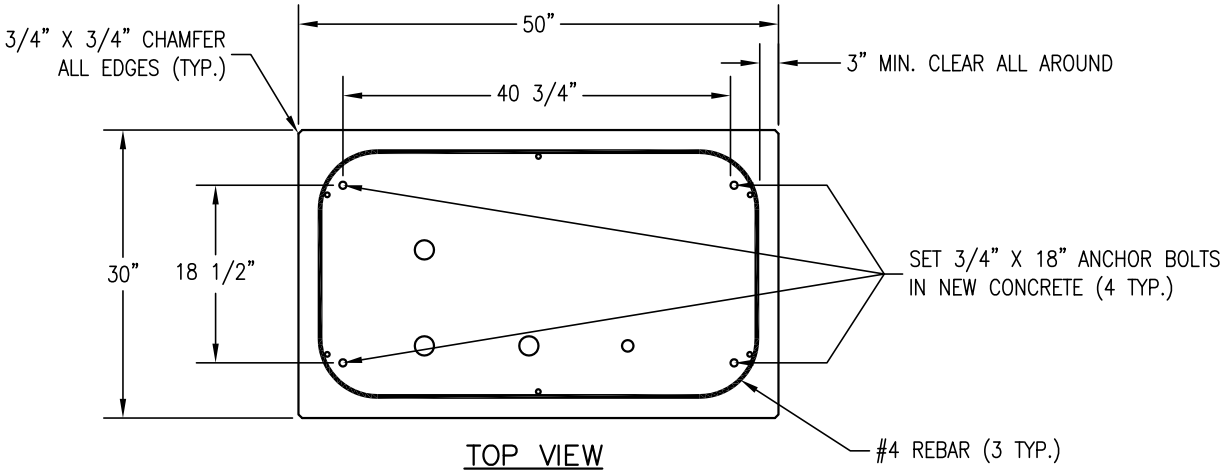

TOP VIEW
NO SCALE

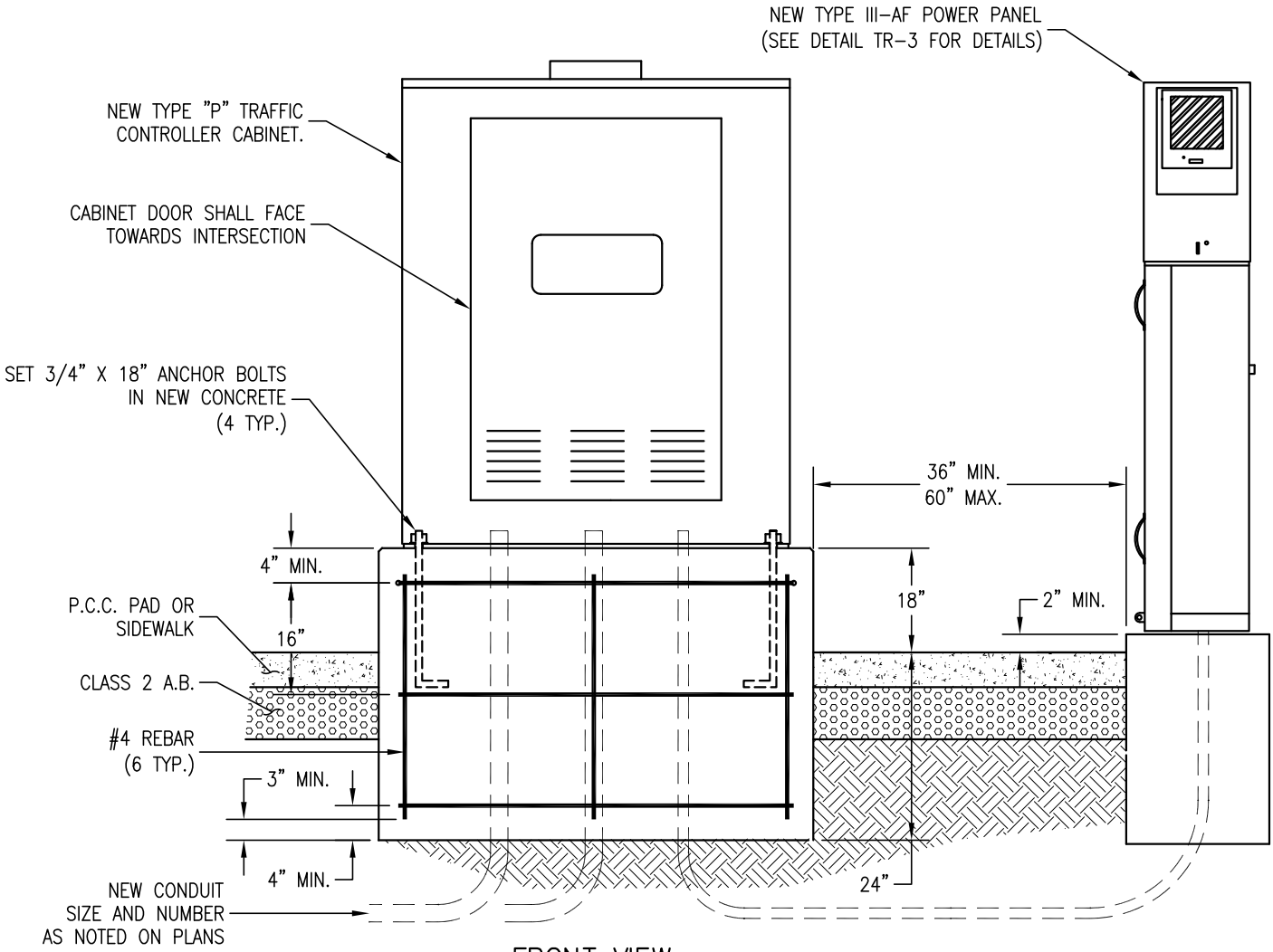

FRONT VIEW
NO SCALE

NOTE: GROUND ROD TO BE IN PULL BOX NEXT TO CABINET.

DRAWN BY: K. TRAN	TRAFFIC SIGNAL CONTROLLER CABINET	TR-2
CHECKED BY: B. TRAN		
APPROVED BY: D. NG		
DATE: OCTOBER 2013	CITY OF SANTA CLARA	PAGE: 50