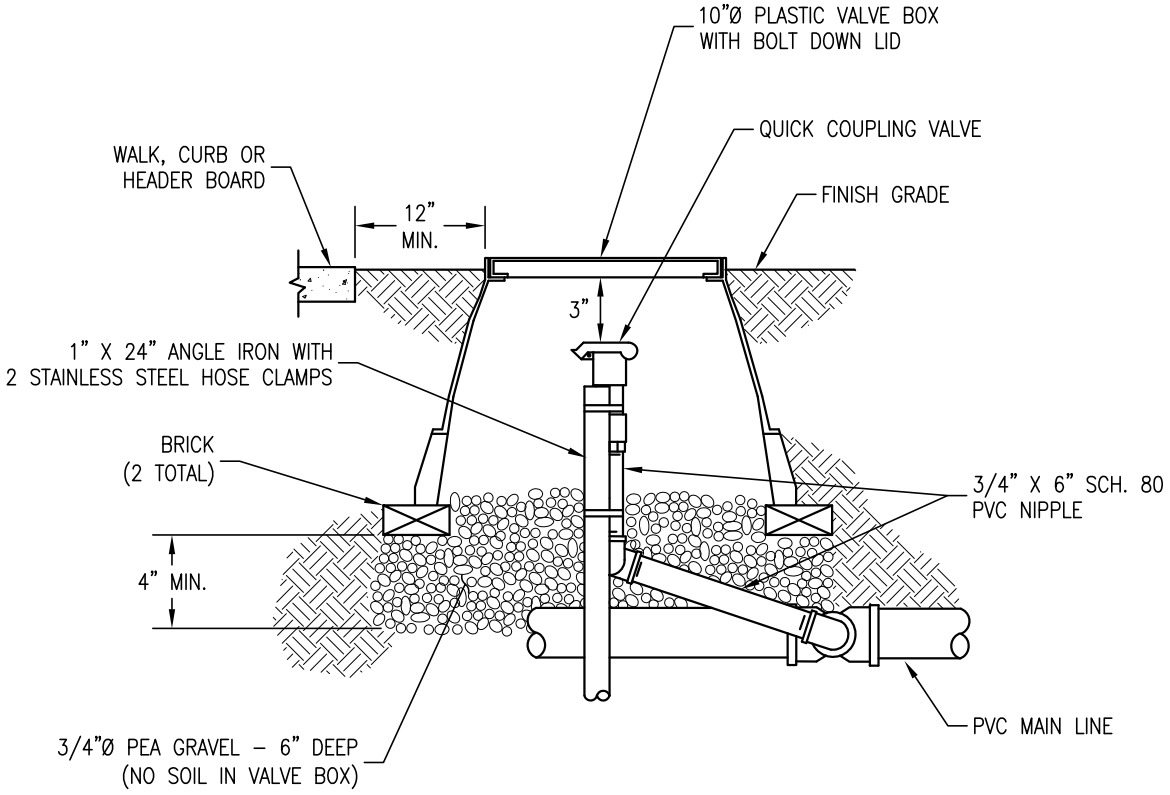

ELEVATION VIEW
NO SCALE

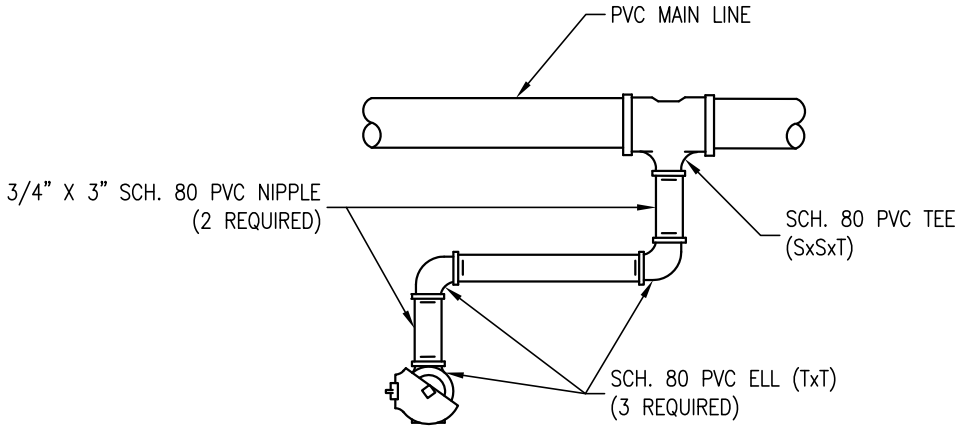

PLAN VIEW
NO SCALE

DRAWN BY: K. TRAN	QUICK COUPLER	LS-10
CHECKED BY: C. QUANZ		
APPROVED BY: G. GOMEZ		
DATE: OCTOBER 2013	CITY OF SANTA CLARA	PAGE: 66